Broadcast Electronics
4100 North 24th Street, Quincy, Illinois 62305 USA • Phone (217) 224-9600 • Fax (217) 224-9607 • www.bdcast.com • bdcast@bdcast.com

FM-10S, FMi 703
FM BROADCAST TRANSMITTERS
Instruction Manual

597-1012
Revision B
April 16, 2013

FM-10S, FMi 703 FM BROADCAST TRANSMITTERS

Instruction Manual

The information in this publication is subject to improvement and change without notice. Although every effort is made to ensure the accuracy of the information in this manual, Broadcast Electronics accepts no responsibility for any errors or omissions. Broadcast Electronics reserves the right to modify and improve the design and specifications of the equipment in this manual without notice. Any modifications shall not adversely affect performance of the equipment so modified.

Proprietary Notice

Trademarks

Copyright

Information in this manual is subject to change without notice and does not represent a commitment on the part of Broadcast Electronics.

Broadcast Electronics may make improvements and/or changes in this manual or in the product described herein at any time.

This product could include technical inaccuracies or typographical errors.

Broadcast Electronics Product Warranty (Two-Year Limited)

BE hereby warrants all new products manufactured by BE against any defects in material or workmanship at the time of delivery thereof, or that develop under normal use within a period of two (2) years from the date of shipment.

BE reserves the right to repair equipment under warranty with new or refurbished equipment or parts. BE's sole responsibility with respect to any equipment or parts not conforming to this warranty is to replace or repair such equipment upon the return thereof F.O.B. to BE's factory in Quincy, Illinois, U.S.A. In the event of replacement pursuant to the foregoing warranty, only the unexpired portion of the warranty from the time of the original purchase will remain in effect for any such replacement.

This warranty shall exclude the following products, component parts and/or assemblies:

(a) Transmitter power output tubes shall only carry the original manufacturers' or suppliers' standard warranty in effect on their original shipment date.

(b) All computers, computer peripherals, cables, hard disk drives, etc., shall only carry the manufacturers' or suppliers' standard warranty in effect on their original shipment date.

(c) "Components", defined as separate and individual parts (e.g. transistors, integrated circuits, capacitors, resistors, inductors, fans, etc), resold by BE from another manufacturer or supplier, shall only carry a 90 day warranty, effective the date of shipment. Any such 'Components' being returned for warranty claim must be (1) returned in their original packaging and (2) must be in new, unused condition. BE is unable to process or resolve component defects or performance concerns on components that have been soldered, installed, wired or in any way altered from new their new condition.

(d) "Resale Equipment", defined as equipment purchased from another manufacturer or supplier, then resold by BE, shall only carry such manufacturer's or supplier's standard warranty in effect as of the original shipment date. All warranty claims against any and all 'resale equipment' sold by BE must be filed directly with the original equipment manufacturer. BE is unable to process or resolve equipment defects or performance concerns on products or services not manufactured by BE.

This warranty shall not extend to claims resulting from any acts of God, terrorism, war, defects or failures caused by Purchaser or user abuse or misuse, operator error, or unauthorized attempts to repair or alter the equipment in any way.

Under no circumstances shall BE be responsible for indirect, incidental or consequential damages, including, but not limited to transportation costs, non-authorized repair or service costs, downtime costs, costs for substituting equipment or loss of anticipated profits or revenue, incurred by Purchaser, whether based in contract, tort or for negligence or breach of statutory duty or otherwise. The terms of the foregoing warranty shall be null and void if the equipment has been altered or repaired without specific written authorization from BE, or if not installed according to BE's instruction manuals, including, but not limited to, the absence of proper grounding, surge (TVSS) protection on the AC circuit panel or proper lightning protection/grounding on all output circuits, or if equipment is operated under environmental conditions or circumstances other than those specifically described in BE's product literature or instruction manual which accompany the equipment. The warranty shall be voided if the product or subassembly is equipped with a tamper seal and that tamper seal is broken. BE shall not be liable for any expense of any nature whatsoever incurred by the original user without prior written consent of BE. The warranty provided herein shall terminate at the end of the period set forth above. This warranty extends only to the original Purchaser and is not transferable. There are no third party beneficiaries of any of the provisions of

this warranty. If the equipment is described as “used” equipment, it is sold as is and where is and no warranty applies unless authorized in writing.

EXCEPT AS SET FORTH HEREIN, AS TO TITLE AND AS SPECIFICALLY REQUIRED BY LAW, THERE ARE NO OTHER WARRANTIES, OR ANY AFFIRMATIONS OF FACT OR PROMISES BY BE, WITH REFERENCE TO THE EQUIPMENT, OR TO MERCHANTABILITY, FITNESS FOR A PARTICULAR APPLICATION, SIGNAL COVERAGE, INFRINGEMENT, OR OTHERWISE, WHICH EXTEND BEYOND THE DESCRIPTION OF THE EQUIPMENT ON THE FACE HEREOF.

IMPORTANT INFORMATION

EQUIPMENT 10ST OR DAMAGED IN TRANSIT

When delivering the equipment to you, the truck driver or carriers' agent will present a receipt for your signature. Do not sign it until you have:

1) Inspected the containers for visible signs of damage and 2) Counted the containers and compared with the amount shown on the shipping papers. If a shortage or evidence of damage is noted, insist that notation to that effect be made on the shipping papers before you sign them.

Further, after receiving the equipment, unpack it and inspect thoroughly for concealed damage. If concealed damage is discovered, immediately notify the carrier, confirming the notification in writing, and secure an inspection report. This item should be unpacked and inspected for damage WITHIN 15 DAYS after receipt. Claims for loss or damage will not be honored without proper notification of inspection by the carrier.

RF PRODUCT TECHNICAL ASSISTANCE, REPAIR SERVICE, PARTS -

Technical assistance is available from Broadcast Electronics by letter, prepaid telephone or E-mail. Equipment requiring repair or overhaul should be sent by common carrier, prepaid, insured, and well protected. If proper shipping materials are not available, contact the RF Technical Services Department for a shipping container. Do not mail the equipment. We can assume no liability for inbound damage, and necessary repairs become the obligation of the shipper. Prior arrangement is necessary. Contact the RF Technical Services Department for a Return Authorization.

Emergency and warranty replacement parts may be ordered from the following address. Be sure to include the equipment model number, serial number, part description, and part number. Non-emergency replacement parts may be ordered directly from the Broadcast Electronics stock room at the number shown below.

RF TECHNICAL SERVICES

Telephone: +1 (217) 224-9617
E-Mail: rfservice@bdcast.com
Fax: +1 (217) 224-6258

FACILITY CONTACTS

Broadcast Electronics, - Quincy Facility
4100 N. 24th St. P.O. BOX 3606
Quincy, Illinois 62305
Telephone: +1 (217) 224-9600
Fax: +1 (217) 224-6258
General E-Mail: bdcast@bdcast.com
Web Site: www.bdcast.com

PARTS

Telephone: +1 (217) 224-9617
E-Mail: parts@bdcast.com

RETURN, REPAIR, AND EXCHANGES

Do not return any merchandise without our written approval and Return Authorization. We will provide special shipping instructions and a code number that will assure proper handling and prompt issuance of credit. Please furnish complete details as to circumstances and reasons when requesting return of merchandise. All returned merchandise must be sent freight prepaid and properly insured by the customer.

MODIFICATIONS

Broadcast Electronics, reserves the right to modify the design and specifications of the equipment in this manual without notice. Any modifications shall not adversely affect performance of the equipment so modified.

SAFETY PRECAUTIONS

PLEASE READ AND OBSERVE ALL SAFETY PRECAUTIONS

ALL PERSONS WHO WORK WITH OR ARE EXPOSED TO POWER TUBES, POWER TRANSISTORS, OR EQUIPMENT WHICH UTILIZES SUCH DEVICES MUST TAKE PRECAUTIONS TO PROTECT THEMSELVES AGAINST POSSIBLE SERIOUS BODILY INJURY. EXERCISE EXTREME CARE AROUND SUCH PRODUCTS. UNINFORMED OR CARELESS OPERATION OF THESE DEVICES CAN RESULT IN POOR PERFORMANCE, DAMAGE TO THE DEVICE OR PROPERTY, SERIOUS BODILY INJURY, AND POSSIBLY DEATH.

DANGEROUS HAZARDS EXIST IN THE OPERATION OF POWER TUBES AND POWER TRANSISTORS

The operation of power tubes and power transistors involves one or more of the following hazards, any one of which, in the absence of safe operating practices and precautions, could result in serious harm to personnel.

A. HIGH VOLTAGE - Normal operating voltages can be deadly. Additional information follows.

B. RF RADIATION - Exposure to RF radiation may cause serious bodily injury possibly resulting in Blindness or death. Cardiac pacemakers may be affected. Additional information follows.

C. HOT SURFACES - Surfaces of air-cooled radiators and other parts of tubes can reach temperatures of several hundred degrees centigrade and cause serious burns if touched. Additional information follows.

D. RF BURNS - Circuit boards with RF power transistors contain high RF potentials. Do not operate an RF power module with the cover removed.

HIGH VOLTAGE

Many power circuits operate at voltages high enough to kill through electrocution. Personnel should always break the primary AC Power when accessing the inside of the transmitter.

RADIO FREQUENCY RADIATION

Exposure of personnel to RF radiation should be minimized, personnel should not be permitted in the vicinity of open energized RF generating circuits, or RF transmission systems (waveguides, cables, connectors, etc.), or energized antennas. It is generally accepted that exposure to "high levels" of radiation can result in severe bodily injury including blindness. Cardiac pacemakers may be affected.

The effect of prolonged exposure to "low level" RF radiation continues to be a subject of investigation and controversy. It is generally agreed that prolonged exposure of personnel to RF radiation should be limited to an absolute minimum. It is also generally agreed that exposure should be reduced in working areas where personnel heat load is above normal. A 10 mW/cm^2 per one tenth hour average level has been adopted by several U.S. Government agencies including the Occupational Safety and Health Administration (OSHA) as the standard protection guide for employee work environments. An even stricter standard is recommended by the American National Standards Institute which recommends a 1.0 mW/cm^2 per one tenth hour average level exposure between 30 Hz and 300 MHz as the standard employee protection guide (ANSI C95.1-1982).

RF energy must be contained properly by shielding and transmission lines. All input and output RF connections, such as cables, flanges and gaskets must be RF leak proof. Never operate a power tube without a properly matched RF energy absorbing load attached. Never look into or expose any part of the body to an antenna or open RF generating tube or circuit or RF transmission system while energized. Monitor the tube and RF system for RF radiation leakage at regular intervals and after servicing.

HOT SURFACES

The power components in the transmitter are cooled by forced-air and natural convection. When handling any components of the transmitter after it has been in operation, caution must always be taken to ensure that the component is cool enough to handle without injury.

Table of Contents

Figures

Tables

1 OVERVIEW

1.1 FM-10S GENERAL

The Broadcast Electronics FM-10S transmitter is a 10 kW solid-state FM transmitter designed for continuous operation in the 87.5 MHz to 108 MHz broadcast band (refer to Figure 1). The FM-10S transmitter is equipped with: 1) an FX-50 FM exciter, 2) four 5kW modular switching power supply assemblies, 3) 16 modular solid-state broadband plug-in RF power amplifier modules, 4) one modular solid-state broadband plug-in IPA module, 5) two low-pass filters, 6) one 2-way and two 8-way combiner assemblies, 7) one output combiner assembly, 8) one 600-watt reject load assembly, 9) one 2-way IPA splitter and two 8-way motherboard splitter assemblies, 10) one reject load assembly, and 11) one microprocessor-controlled system controller and one module controller.

Components are housed in one cabinet. An extensive redundancy and protection system keeps a signal on the air even in the most extreme conditions.

Figure 1. FM-10S Transmitter

1.2 FMi 703 GENERAL

The Broadcast Electronics FMi 703 transmitter is a 7 kW FM+IBOC and 2.8 kW IBOC only solid-state transmitter based largely on the FM-10S architecture and is designed for continuous operation in the 87.5-108MHz broadcast band (refer to Figure 2). The FMi 703 is equipped with: 1) FXi 250 FM/IBOC Digital Exciter, 2) four 5kW modular switching power supplies, 3) 16 modular solid-state broad-band plug-in RF power amplifier modules biased for linear operation, 4) One modular solid-state broadband plug-in IPA module with an option for a second configured for standby operation, 5) One built in 2-way combiner with built in reject load, 6) Microprocessor base controller to control TX operation.

Components are housed in one cabinet. An extensive redundancy and protection system keeps a signal on the air even in the most extreme conditions.

Figure 2. FMi 703 Transmitter

1.3 SPECIFIC FM-10S/FMi 703 FEATURES INCLUDE:

BROADBAND DESIGN. A broadband design eliminates tuning controls.

MODULAR SWITCHING POWER SUPPLY UNITS. Four 5 kW modular switching power supply units provide operating potentials for the RF power amplifier modules. Separate switching power supply units provide ±12 and +5 volt operating potentials for the controllers RF power amplifier modules and IPA. An auto power supply backup option allows fifth power amplifier power supply modules to be installed in each transmitter cabinet.

MODULAR RF AMPLIFIER UNITS. A total of 16 modular solid-state broadband plug-in RF amplifier modules. The modules are accessible from the front of the transmitter and output 700 watts of RF power. In the event of an RF amplifier module failure each module can be inserted or removed from the transmitter during on-air operation. RF drive for the RF amplifier modules is provided by two solid-state broadband plug-in 500 watt IPA modules.

SOFT–FAILURE FEATURE. A powerful soft-failure feature. If one RF amplifier module fails the transmitter combiner automatically re-configures to output 95% of the RF output power.

SYSTEM/MODULE CONTROLLERS. One system controller and two module controllers. The module controllers monitor and control 32 RF amplifier modules and two IPA modules. The system controllers monitor and control the module controllers and system functions such as VSWR foldback.

OPTIONS. Several options allow the transmitter to be equipped with: 1) an automatic exciter switcher 2) a fifth switching power supply assembly 3) an automatic IPA switcher and 4) RTDS (available at a future date).

REDUNDANT DESIGN. Redundant design for superior reliability. The modularity of the RF amplifier modules power supply modules IPA and transmitter options allow for redundant circuitry in critical areas. If a failure occurs this redundancy allows the transmitter to maintain on-air operation.

IEC 215 COMPLIANT. IEC 215 safety compliant.

1.4 FX–50 EXCITER.

The FM-10S comes standard with the FX-50 solid-state wideband FM exciter providing a continuously variable RF output at any frequency within the 87.5 MHz to 108 MHz broadcast band in 10 kHz increments. The FX-50 is designed to accept multiple wideband composite inputs from a stereo generator or SCA generator. In addition the FX-50 is equipped with a 600 ohm balanced monaural input. A tapped dual primary power transformer and a voltage selector allows operation from a wide range of ac input potentials.

The FX-50 is equipped with a digitally programmed frequency synthesizer which generates and maintains the phase and frequency of the carrier. A temperature compensated reference oscillator and a dual-speed phase-locked-loop control circuit locks the frequency of a modulated oscillator to a precision frequency oscillator allowing prompt on-frequency operation. A solid-state broadband 3 to 50 watt RF amplifier provides amplification of the FM signal. Exciter operating parameters are monitored and displayed by a front-panel digital LCD multimeter and an LED display.

1.5 FXi 60/250 DIGITAL EXCITER.

The FM-10S may also be equipped with the optional FXi 60 or FXi 250 digital FM exciter. The FXi 60/250 is a solid-state wideband FM digital exciter providing a continuously variable RF output at any frequency within the 87.5 to 108 MHz FM broadcast band in 10 kHz increments. The FXi is divided into several board assemblies. The assemblies include: 1) DSP (Digital-Signal-Processor) Modulator 2) Controller 3) Oscillator/ Filter 4) RF Power Amplifier 5) Power Supply and 6) Color GUI Interface. For an FM-10S transmitter the FXi 60/250 will be equipped with a 60 or 250 watt RF power amplifier module.

The FXi exciter is highly integrated and comes with the following standard features: 1) AES Input 2) L & R Analog Inputs 3) Balanced and Unbalanced Composite Inputs 4) Two internal SCA Generators 5) Internal RDS Generator and 6) External SCA/RDS Input. The FXi also has a built in stereo generator compressor and limiter all of which are software programmable and defeatable. The exciter can also be operated in Mono (L+R), Mono L, or Mono R modes. The digital exciter also provides modulation Directly to Channel (DTC) 87.5 – 108 MHz eliminating any analog up converter processes. The chassis of the FXi requires 7 inches of a 19 inch rack cabinet. Refer to publication 597-0541 for a detailed explanation of the FXi 60/250 features.

1.6 FXi 250 EXCITER (IBOC).

When used in an FMi 703 the FXi 250 exciter can be configured for IBOC operation with a plug in Exgine card included with the XPi 10 exporter upgrade. With the Exgine card installed the FXi 250 can be set for FM + IBOC or IBOC only mode. This mode is selectable from the front panel of the FXi 250 exciter. The FXi 250 can also be set for FM only mode in a 703 with the power output limited at 7 kW. This is also selectable from the front panel of the exciter.

1.7 XPi 10 IBOC Exporter.

The addition of the XPi 10 IBOC Exporter upgrade is required for IBOC transmission. The XPi 10 works in conjunction with the FXi 250 to provide the IBOC signal to the FMi 703. In order to produce the IBOC signal you must have both the FXi 250 and the XPi 10 installed an operating in the FMi 703 TX.

1.8 POWER SUPPLY.

The FM-10S/FMi 703 transmitter is equipped with four 5 kW modular switching power supply assemblies. The supplies provide DC operating potentials for the transmitter power amplifier circuitry. A separate modular switching power supply pro- vides ±12 and +5 volt operating potentials for the controller IPA and RF amplifier modules. Each supply is equipped with overload protection over-voltage protection high temperature protection and a soft-start feature which minimizes in-rush currents. A fifth 5 kW modular switching power supply can be installed as a backup if the transmitter is equipped with the backup power supply option.

1.9 RF POWER AMPLIFIER MODULES.

The FM-10S/FMi 703 transmitter is equipped with 16 RF power amplifier modules.

The PA and IPA modules in the FMi 703 are solid-state amplifiers biased for linear operation. There is the same number of modules and the architecture is the same as those used in the FM-10S.

Each module consists of an interface circuit board 2 RF amplifier circuit boards and a combiner. Each RF amplifier circuit board: 1) contains a single dual MOSFET power transistor operated in a push-pull configuration and 2) outputs 350 watts of RF power. RF amplifier operations are monitored by the interface circuit board. The interface circuit board is designed to monitor over-current over-voltage high reflected power and high temperature conditions. A limit circuit is designed to limit the RF output during high reflected power high temperature over-current or high forward power demand conditions. The operating status of each module parameter is routed to a module controller circuit board for display. The output from each RF amplifier module is combined to produce 700 watts of RF power.

1.10 RF SPLITTER AND IPA MODULES.

RF power from the exciter is fed into the IPA module. This module is identical to the RF power amplifiers and output 500 watts of RF power. The transmitter can be equipped with a second “standby IPA module” and an automatic IPA switcher if the “Standby IPA option” is installed.

1.11 CONTROLLER.

The FM-10S/FMi 703 controller (located in the Control cabinet) consists of a supervisor circuit board two module control circuit boards a front-panel display circuit board and an input/output circuit board. The controller utilizes extensive RFI filtering and 3 microprocessors to ensure maximum reliability. A battery back-up system is incorporated into the design to maintain the controller memory during AC power interruptions. Operating potentials for the controller circuitry are provided by a modular switching power supply. The supply provides the controller circuitry with stable ±12 and +5 VDC supplies.

The supervisor controller circuit board is equipped with a Z-World© microprocessor module. The supervisor circuit board controls and monitors the module control circuit board and performs all system type control operations such as on/off control power trim automatic power control and remote control interfacing. The automatic power control function responds to reflected power and internal temperature conditions. If the reflected power or internal temperature increases above the thresholds the transmitter will automatically foldback the output power to maintain on-air operation. The soft-failure feature controls the combiner in response to RF module failures. In the event of an RF module failure the controller automatically re-configures the combiner to provide maximum RF output power.

The supervisor circuit board controls the operation of all the controller front panel displays and switches. Transmitter forward power reflected power PA voltage air inlet temperature and exciter forward/reflected power samples are routed to the circuit board. The samples are displayed or used as status information by the microprocessor. System parameters are displayed by a 4-character LCD display. Module parameters are displayed by a 2-line 16 character LCD display.

The module control circuit board reports to and responds to commands from the supervisor circuit board. The module control circuit board is equipped with two 80C31 microprocessors. The circuit board provides monitoring control and display functions for 32 RF amplifier modules and two IPA modules. The module control circuit board is also responsible for the combiner re-configuration during soft-failure conditions. RF power amplifier module forward power reflected power current voltage and temperature samples are routed to the circuit board for monitoring and display.

The FM-10S/FMi 703 can also be equipped with RTDS (available at a future date). RTDS is a system designed to monitor control and troubleshoots transmitter operations from a remote location using a PC. The system consists of an RTDS microprocessor module and the RTDS PC software.

1.12 COMBINER.

The FM-10S/FMi 703 is equipped with an auto-configurable combiner system. This unique system matches the combiner to the number of operating modules in the transmitter. In the event of a failure in an RF amplifier module the combiner will automatically re-configure to provide maximum output power from the remaining modules.

For example if one RF amplifier module encounters a failure the combiner will automatically re-configure to provide approximately 95% of the rated output power. The combiner system is controlled by the transmitter module control circuit board.

The combiner system consists of two 8-way combiners and one 2-way combiner. Each 8-way combiner sums the outputs of 8 RF amplifier modules to produce 5 kW output. One 2-way combiner sums the 5 kW outputs from two 8-way combiners to produce the 10 kW output. The unique features of the combiner include: 1) very low loss, 2) broadband and 3) no cable connections.

1.13 TRANSMITTER CONFIGURATIONS.

The FM-10S transmitter can be ordered in the following configurations:

Part Number	DESCRIPTION
909-1010-206	FM-10S 10 kW solid-state FM transmitter for operation in the 87.5 MHz to 108 MHz broadcast band 196 to 252 VAC 50/60 Hz three-phase supply. Includes FX-50 FM exciter 196 to 252 VAC 50/60 Hz.
909-1010-226	FM-10S 10 kW solid-state FM transmitter for operation in (available as customer special) the 87.5 MHz to 108 MHz broadcast band 196 to 252 VAC 50/60 Hz single-phase supply. Includes FX-50 FM exciter 196 to 252 VAC 50/60 Hz.
909-1010-386	FM-10S 10 kW solid-state FM transmitter for operation in the 87.5 MHz to 108 MHz broadcast band 341 to 435 VAC 50/60 Hz three-phase WYE supply. Includes FX-50 FM exciter 196 to 252 VAC 50/60 Hz.

The FMi 703 transmitter can be ordered in the following configurations:

Part Number	DESCRIPTION
909-0703-206	FMi 703 HD XMTR 220V 3PH Delta
909-0703-226	FMi 703 HD XMTR 220V 1PH
909-0703-386	FMi 703 HD XMTR 380V 3PH 4-WIRE WYE

1.14 OPTIONAL EQUIPMENT AND SPARE PARTS KITS.

The following text presents the optional equipment and spare parts kits available for the FM-10S transmitter.

Part Number	DESCRIPTION
909-0051-204	FC-30 FM SCA generator.
979-1010	Recommended spare parts kit for FM-10S/FMi 703 solid-state transmitter. Does not include spare parts for the FX-50.
979-1011	Recommended semiconductor kit for FM-10S/ FMi 703 solid-state transmitter. Does not include semiconductors for the FX-50.
909-9000	LYNX FM digital stereo generator.
979-0600	Upgrade FXi 60 Digital FM Exciter
969-1011-001	Standby FXi 60 Digital FM Exciter
969-1011	Main/alternate exciter switcher option FX-50.
969-1013	Backup power supply module option.
969-1022	Main/alternate IPA switcher option.

The following list presents optional equipment and spare parts kits for the FMi 703 transmitter.

909-6027-MB3	XPi-10, HD Signal Generator / Exporter / Exgine card.
979-1010	Recommended spare parts kit for use with the FM-10S/FMi 703 solid-state transmitter.
979-1011	Recommended semiconductor kit for FM-10S/ FMi 703 solid-state transmitter.
969-1013	Backup power supply module option.
969-1022	Main/alternate IPA switch option.
979-0551	Kit HD Radio AES Bypass Dual Processors.
979-0551-001	Kit HD Radio AES Bypass Omnia HDFM single processor.
979-0551-002	Kit HD Radio AES Bypass Orban HDFM single processor.

1.15 EQUIPMENT SPECIFICATIONS.

Refer to Table 1 for electrical and physical specifications of the FM-10S or Table 2 for specifications of the FMi 703 transmitter.

Table 1. FM-10S ELECTRICAL AND PHYSICAL SPECIFICATIONS

PARAMETER	SPECIFICATION
RF POWER OUTPUT	5 kW to 11 kW (as specified)
FREQUENCY RANGE	87.5 to 108 MHz (as specified). Exciter programmable in 10 kHz increments.
RF OUTPUT IMPEDANCE	50 ohms
RF OUTPUT CONNECTOR	3 1/8 inch EIA female field flange.
MAXIMUM VSWR	Rated power into 1.5:1 maximum. Capable of operating into higher VSWR conditions with automatic power reduction. Open and short circuit protected at all phase angles.
EXCITER	Model FX-50, solid-state 50 watt output with digitally programmed synthesizer. 10 kHz increment programming. Optional FXi 60/250 digital exciter,60/250 watt output, 10 kHz increment programming.
FREQUENCY STABILITY	
FX-50 Exciter	±300 Hz. 0 to 50 degrees C.
Optional FXi Exciter	±300 Hz, (-10˚C to +50˚C). Can be locked to an external reference source such as GPS (Global Positioning System).
MODULATION TYPE	
FX-50 Exciter	Direct modulation of carrier frequency.
Optional FXi Digital FM Exciter	Direct To Channel modulation.

MODULATION CAPABILITY FX-50 Exciter	Greater than ±350 kHz.
Optional FXI Digital FM Exciter	±300 kHz maximum.
AM SIGNAL-TO-NOISE RATIO: Asynchronous	55 dB (65dB typical) below an equivalent reference carrier with 100% AM modulation @ 400 Hz, 75 microsecond de-emphasis (no FM modulation present).
Synchronous	50 dB (60dB Typical) below an equivalent 10 kW reference carrier @ 100% AM modulation @ 400 Hz. 75 μS de-emphasis with ±75 kHz FM modulation @ 400 Hz and a 10 kW output power.
IMD PROTECTION	20 dB or better turn-around-loss or mixing loss to interfering signals.
RF HARMONIC SUPPRESSION	Meets all FCC/IC requirements and CCIR recommendations.
AC POWER REQUIREMENTS	196 to 252V AC 50/60 Hz three phase. 196 to 252V AC 50/60 Hz single phase. 341 to 435V AC 50/60 Hz three phase WYE.
AC POWER CONSUMPTION	17.3 kW nominal at a 10 kW RF power output, 50 Ohm resistive load, 230V AC input. 21 kW at a 10 kW RF power output, 1.5:1 VSWR load, 230V AC input.
POWER FACTOR	0.98 at 230 VAC. 10 kW RF output power into 50 ohm resistive load.
OVERALL EFFICIENCY	55% or greater at 230 VAC (AC line input to RF output). 10 kW RF output power into a 50 ohm resistive load, 58% typical.
SURGE PROTECTION	Tested with IEEE C62.41-1991 recommended waveforms for location categories B3 and IEC 801-4 standard waveforms for severity level 4.
RF SAMPLE OUTPUTS	5, BNC. One additional output with optional FXi 60 exciter.
DIRECTIONAL COUPLERS Transmitter Output	3 total, 1 forward power, 1 reflected power and 1 forward sample for modulation monitor.
Exciter Output	2 total, 1 forward power and 1 reflected power.
Low-Pass Filter Output	4 total, 1 forward power and 1 reflected power each for low-pass filter A, low-pass filter B.
RF Module Output	16 total, 1 forward power and 1 reflected power for each module.
IPA Module Output	2 total, 1 forward power and 1 reflected power.
COMPOSITE OPERATION WITH FX-50 AND FXI	
COMPOSITE INPUTS	3 total, BNC. One unbalanced, one balanced, and one front panel test. Optional FXI. One balanced and one unbalanced.
COMPOSITE INPUT IMPEDANCE	10 k ohms or 50 ohms nominal, resistive selectable.
COMPOSITE INPUT LEVEL	3.5 V p-p nominal for ±75 kHz deviation.

FM SIGNAL-TO-NOISE RATIO: Composite	85 dB below ±75 kHz deviation @ 400 Hz measured in a 20 Hz to 30 kHz bandwidth with 75 microsecond de-emphasis.
DISTORTION Harmonic	0.02% or less at 400 Hz.
SMPTE Intermodulation Distortion	0.02% or less, 60 Hz/7kHz, 1:1 ratio.
CCIF Intermodulation Distortion	0.02% or less, 15 kHz/14 kHz, 1:1 ratio.
Transient Intermodulation Distortion	0.02% or less, sine wave/square wave.
COMPOSITE AMPLITUDE RESPONSE	±0.1 dB, 30 Hz to 53 kHz.
COMPOSITE PHASE RESPONSE	±0.25 degrees from linear phase, 30 Hz to 53 kHz.
COMPOSITE GROUP DELAY	125 nanoseconds.
COMPOSITE SLEW RATE	9 volts/microsecond (symmetrical).
ANALOG L & R STEREO OPERATION WITH FX-50 AND FXi	
AUDIO INPUT IMPEDANCE	600 ohms balanced, resistive, floating, adaptable to other impedances.
AUDIO INPUT LEVEL	+10 dBm, ±1 dBm for 100% modulation at 400 Hz.
AUDIO INPUT FILTERS	15 kHz low-pass filters with delay equalization for minimum overshoot.
FREQUENCY RESPONSE	±0.5 dB, 30 Hz to 15 kHz, 75 microsecond pre-emphasis (flat, 25 or 50 microsecond selectable).
TOTAL HARMONIC DISTORTION	0.05% or less @ 400 Hz.
SMPTE INTERMODULATION DISTORTION	0.05%, 60 Hz/7 kHz; 4:1 ratio.
CCIF INTERMODULATION DISTORTION	0.05% or less, 15 kHz/ 14 kHz; 1:1 ratio.
TRANSIENT INTERMODULATION DISTORTION	0.05% (square wave/sine wave).
FM SIGNAL TO NOISE	80 dB or greater below left or right channel 100% modulation @ 400 Hz, 75 microsecond de-emphasis.
STEREO SEPARATION	50 dB or greater from 30 Hz to 15 kHz (sine wave). FXi – 60 dB or better.
DYNAMIC STEREO SEPARATION	40 dB or greater from 30 Hz to 15 kHz (normal program content). FXi – 50 dB or better.
LINEAR CROSSTALK (MAIN TO SUB/SUB TO MAIN DUE TO AMPLITUDE AND PHASE MATCHING OF LEFT AND RIGHT CHANNELS)	45 dB below 100% modulation, 30 Hz to 15 kHz. FXi -55 dB or better.
NON-LINEAR CROSSTALK (MAIN TO SUB/SUB TO MAIN DUE TO DISTORTION PRODUCTS).	70 dB minimum below 100% modulation.
38 kHz SUPPRESSION	80 dB minimum below 100% modulation.
PILOT STABILITY	±0.5 Hz, +32˚F to +122˚F (0˚C to +50˚C).

STEREOPHONIC SEPARATION	50 dB, 30 Hz to 15 kHz (Sinewave).
MODES OF OPERATION	Stereo, Mono L+R, Mono L, and Mono R. Remote control accessible.
MONAURAL OPERATION WITH FX-50 and FXi	
AUDIO INPUT IMPEDANCE	600 ohms balanced, resistive, adaptable to other impedances, 60 dB common mode suppression.
AUDIO INPUT LEVEL	+10 dBm nominal for ±75 kHz deviation @ 400 Hz.
AUDIO FREQUENCY RESPONSE	±0.5 dB, 30 Hz to 15 kHz, selectable flat, 25, 50 or 75 microsecond pre-emphasis.
THD PLUS NOISE	0.02% or less at 400 Hz.
SMPTE IMD	0.02% or less, 60 Hz to 7 kHz, 4:1 ratio.
CCIF IMD	0.02% or less, 15 kHz/14 kHz 1:1 ratio.
TRANSIENT IMD	0.02% or less (sine wave/square wave).
FM SIGNAL-TO-NOISE RATIO	85 dB below ±75 kHz deviation @ 400 Hz measured in a 20 Hz to 30 kHz bandwidth with 75 microsecond de-emphasis.
SCA OPERATION WITH FX-50	
MODULATION TYPE	Direct FM.
SUBCARRIER FREQUENCY	67 kHz (39 to 95 kHz optional).
SUBCARRIER FREQUENCY STABILITY	±0.5% (330 Hz @ 67 kHz), 0˚C to +50˚C
SUBCARRIER HARMONIC CONTENT	Less than 0.3%.
SUBCARRIER ENVELOPE DECAY	Greater than 100 milliseconds from 90% to 10% subcarrier level.
MODULATION CAPABILITY	±20% of subcarrier frequency, maximum.
INPUT IMPEDANCE	
AUDIO	600 ohms, balanced, resistive.
DATA	75 ohms, unbalanced, resistive, DC coupled.
INPUT LEVEL	
AUDIO	Adjustable +10 dBm to -10 dBm for ±6 kHz deviation @ 400 Hz.
DATA	Adjustable 1.0 to 4.0 V p-p for ±6 kHz deviation, DC coupled.
PRE-EMPHASIS:	
AUDIO	150 microsecond standard (75 microseconds with internal jumper).
DATA	No pre-emphasis.
FREQUENCY RESPONSE:	
AUDIO	±0.5% dB, 10 Hz to 10 kHz, exclusive of low pass filter.
DATA	±0.5 dB, DC to 10 kHz.
LOW-PASS FILTER	
AUDIO	Sixth order, -3 dB at 4.3 kHz standard (resistor changes for other values).

DATA	Sixth order, -3 dB at 4.3 kHz standard (resistor changes for other values). May be bypassed.
TOTAL HARMONIC DISTORTION	Less than 0.5% throughout AF pass band.
SMPTE INTERMODULATION DISTORTION	Less than 0.5% 60 Hz/7 kHz, 1:1 ratio (low-pass and pre-emphasis filter bypassed).
CROSSTALK SCA TO STEREO	-60 dB or better below 100% modulation of left or right. 75 microsecond de-emphasis.
CROSSTALK STEREO TO SCA	-50 dB or better below ±kHz deviation of SCA using 150 microsecond de-emphasis and FS-30 stereo generator.
FM SIGNAL-TO-NOISE RATIO	62 dB below ±6 kHz deviation @ 400 Hz (150 microsecond de-emphasis).
AES INPUT STEREO OPERATION with FXi	
INPUT IMPEDANCE	110 Ohms, Balanced.
INPUT LEVEL	-2 dBFS for 100% modulation @ 400 Hz, adjustable. (32, 44.1, 48, and 96 kHz sampling rates.
CONNECTOR	Wire – XLR, Optical – Toshiba (TosLink)
FREQUENCY RESPONSE	±0.5 dB; 20 Hz to 15 kHz.
THD + NOISE:	0.03%; 20 Hz to 15 kHz.
SMPTE IMD	0.03%; 60 Hz / 7 kHz, 4:1 Ratio.
CCIF IMD	0.03%; 15 kHz / 14 kHz, 1:1 Ratio.
TRANSIENT IMD	0.03%; Square Wave/Sine Wave.
FM SIGNAL TO NOISE RATIO	80 dB or better. 100% modulation @ 400 Hz.
SEPARATION	60 dB; 20 Hz to 15 kHz.
DYNAMIC SEPARATION	50 dB; 20 Hz to 15 kHz.
LINEAR CROSSTALK	60 dB below 100% modulation; 20 Hz to 15 kHz.
NON-LINEAR CROSSTALK	70 dB below 100% modulation.
38 kHz SUPPRESSION	.80 dB below 100% modulation.
PILOT STABILITY	±0.3 Hz.
MODES OF OPERATION	Stereo, Mono (L + R), Mono L, and Mono R.
INTERNAL SCA OPERATION with FXI	
AUDIO INPUT IMPEDANCE	600 ohms or 10 k ohms selectable.
AUDIO INPUT LEVEL	+10dBm for 10% Injection, adjustable.
CONNECTOR	D-Sub. 9-position female.
FREQUENCY RESPONSE	±0.5 dB; 20 Hz to 5 kHz.
SIGNAL TO NOISE RATIO	55 dB or better
FREQUENCY	20 kHz to 99 kHz; programmable
PRE-EMPHASIS	0, 50, 75, and 150 μsec.
DEVIATION	2.5 kHz to 10 kHz; programmable.

INJECTION LEVEL	2% TO 15%; programmable.
INTERNAL RDS OPERATION with FXi	
FREQUENCY	57 kHz.
INJECTION LEVEL	2% TO 15%; programmable.
MODES OF OPERATION	PS (Program Service Name), PI (Program Identification), PTY (Program Type), AF (Alternate Frequency List), and DI (Decoder Identification).
EXTERNAL SCA/RDS OPERATION with FXi	
INPUT IMPEDANCE	10 k ohms unbalanced.
INPUT LEVEL	3.5 V p-p for 10% Injection.
CONNECTOR	BNC female
FREQUENCY RESPONSE	±0.5 dB; 50 kHz to 100 kHz.
19 kHz OUTPUT	2.5 V p-p into 50 ohms for external synch.

PHYSICAL	
DIMENSIONS	
FX-50 Exciter	Width: 19.0 Inches (48.3 cm) Height: 5.25 Inches (13.3 cm) Depth: 19.00 Inches (48.3 cm)
Optional FXi Digital Exciter	Width: 19.0 Inches (48.3 cm) Height: 7.0 Inches (17.78 cm) Depth: 22.5 Inches (57.15 cm)
Transmitter	Width: 44.5 Inches (113 cm) Height: 70 Inches (178 cm) Depth: 26.5 Inches (68 cm)
WEIGHT	
FX-50 Exciter	38 pounds (17.2 kg) unpacked.
Optional FXi Digital Exciter	38 pounds (17.2 kg) unpacked.
Transmitter	713 pounds (324 kg) standard unpacked.
SAFETY	Meets IEC 215.
ENVIRONMENTAL	
HEAT DISSIPATION	8 kW (27,354 BTU/hr) nominal at 10 kW RF output, 50 ohm resistive load. 11 kW (37,570 BTU/hr) at 10 kW RF output into a 1.5:1 VSWR load with 230 VAC input.
COOLING AIR REQUIREMENTS	2500 CFM (70.8 cubic meters per minute) total
AMBIENT TEMPERATURE RANGE	+32˚F to +122˚F (0˚C to +50˚C).
MAXIMUM ALTITUDE	
50 Hz Models	0 to 7,500 feet above sea level (0 to 2286 Meters)
60 Hz Models	0 to 10,000 feet above sea level (0 to 3048 Meters)

Table 2. FMi 703 ELECTRICAL SPECIFICATIONS

PARAMETER	SPECIFICATION
RF POWER OUTPUT RANGE IBOC ONLY FM + IBOC	 1,000 – 2,800 W 3,000 – 7,000 W
OUTPUT IMPEDANCE	50 ohms nominal
OUTPUT CONNECTOR	3 1/8 inch EIA flange, 1 5/8" flange optional.
OVERALL EFFICIENCY IBOC ONLY FM + IBOC	 >25% >50%
VSWR	Rated power into 1.5:1 maximum. Capable of operating into higher VSWR conditions with automatic power reduction. Open and short circuit protected at all phase angles.
FREQUENCY RANGE	87.5MHZ TO 108MHZ; 10kHz increments.
FREQUENCY STABILITY Internal 10MHz Ref.	 ±300 Hz, 0 - 50 degrees C.
External 10MHz Ref. (GPS)	Determined by source.
MODULATION CAPABILITY	±300 kHz FM Mode.
MODULATION MODES	FM Only, FM + IBOC, and IBOC Only.
Asynchronous AM S/N Ratio	55 dB below rated power with 100% AM modulation @ 400 Hz, 75 μS de-emphasis (no FM modulation present).
Synchronous AM S/N Ratio	50 dB below rated power with 100% AM modulation @ 400 Hz, and 75 μS de-emphasis (± 75kHz modulation).
IMD Protection	20 dB or better turn-around-loss or mixing loss to interfering signals.
Spurious and Harmonic	Meets or exceeds all FCC requirements.
Altitude	10,000 ft. (3048M) @ 60Hz; 7,500 ft. (2286M) @ 50Hz.
Cooling Air Requirement	2500 CFM (70.8 cubic meters per minute) total.
Weight	713 lbs. standard unpacked.
AC Input AC Voltage Requirements, 3 Phase	 196 to 252VAC, 50/60Hz, 3-phase, Closed Delta or WYE (3 or 4 wire). 340 to 435VAC, 50/60Hz, 3-phase, 4 wire, WYE only.
Single phase	196 to 252VAC, 50/60Hz, Single phase.
POWER FACTOR	0.98 at 230VAC.

AC Power Consumption IBOC ONLY FM + IBOC	 10kW @ 2.8W RF output. 14kW @ 7kW RF output.
Heat Dissipation IBOC ONLY FM + IBOC	 7,200W (24,573BTU/hr) nominal at 2.8kW RF output. 7,000W (23,891BTU/hr) nominal at 7kW RF output.
FM Audio Performance AES Input FM+IBOC Mode	
Input Level	-2dBFS for 100% modulation.
Input Frequency	32, 44.1, 48 or 96kHz; 16-24 bits.
Impedance	110 ohms.
Connector	Wire – XLR, Optical – TosLink.
Amplitude Response	±0.5dB; 20Hz to 15kHz.
IMD Distortion	0.03% or better.
THD + Noise Stereo Mono	 0.03% or better. 0.05% or better.
S/N Ratio Stereo Mono	 85dB or better below 100% modulation @ 400Hz. 85dB or better below 100% modulation @ 400Hz.
Stereo Separation	65dB; 20Hz to 15kHz
Pilot Stability	±0.3Hz; 0-50 degrees C.
Internal SCAs (2) Frequency Deviation Injection Level Pre-Emphasis	 20kHz to 99kHz software programmable. 2.5kHz to 10kHz. 2% to 15% 0, 50 μS, 75 μS, or 150 μS.

2 INSTALLATION

2.1 INTRODUCTION.

This section contains information required for the installation and preliminary checkout of the Broadcast Electronics FM-10S/FMi 703 transmitter.

2.2 UNPACKING.

The equipment becomes the property of the customer when the equipment is delivered to the carrier. Carefully unpack the transmitter. Perform a visual inspection to determine that no apparent damage has been incurred during shipment. All shipping materials should be retained until it is determined that the unit has not been damaged. Claims for damaged equipment must be promptly filed with the carrier or the carrier may not accept the claim.

The contents of the shipment should be as indicated on the packing list. If the contents are incomplete, or if the unit is damaged electrically or mechanically, notify both the carrier and Broadcast Electronics.

2.3 ENVIRONMENTAL REQUIREMENTS.

TABLE 1, provides environmental conditions which must be considered prior to transmitter installation. Refer to TABLE 1 in SECTION I, GENERAL INFORMATION and ensure the transmitter is to be installed in an acceptable environment.

2.4 COOLING AIR REQUIREMENTS.

The FM-10S/FMi 703 transmitter requires a source of cooling air to maintain an acceptable operating temperature. The transmitter requires a cooling air flow of 2700 cubic feet per minute (refer to Figure 3). The cooling air source must be dry and well filtered.

If the heated transmitter air is to be ducted from the room, the duct system must not intro- duce any back-pressure on the equipment. Proper allowances for air flow will ensure that only a limited amount of heat is dissipated into the equipment interior. The duct system must allow for a minimum air flow of 2700 cubic feet of air per minute.

If an exhaust system is desired, an exhaust hood must be designed. A paper titled “TRANSMITTER COOLING SYSTEMS: DESIGN, OPERATION, AND MAINTENANCE” provides information on the design and maintenance of transmitter exhaust systems. The paper can be obtained by locating the document on the Broadcast Electronics web site; www.bdcast.com or by contacting Broadcast Electronics Technical Services.

2.5 PRIMARY POWER.

The standard FM-10S/FMi 703 transmitter operates from a three-phase AC power source. The transmitter must be connected to a closed-delta or WYE three-phase power source. Operation from an unsatisfactory power source will void the warranty on the transmitter as any resulting damage is beyond the control of the manufacturer. Before attempting installation of the transmitter, assure that the proper power source is installed. Acceptable power input configurations are shown in the following pages.

An open-delta, V-to-V, T-to-T, T-to-L, or Scott connected power source will provide unsatisfactory transmitter performance as transients and unstable power can damage components of the transmitter and provide degraded specifications. Any of these systems will develop a considerable imbalance between phases in voltage, phase angle or both voltage and phase angle. These problems can result in

premature failure of power supply and RF circuit components.

It is important that the local electric utility be consulted to ensure that the correct service is provided before connection of the transmitter to a primary power source. The proper power source can be readily identified by the use of three transformers with one winding each or one transformer with three windings instead of the use of two transformers as required for the unacceptable configurations.

2.6 INSTALLATION.

Each transmitter is wired, operated, tested, and inspected at the factory prior to shipment and is ready for installation when received. Prior to installation, this publication should be studied to obtain an understanding of the operation, circuitry, nomenclature, and installation requirements. Installation is accomplished as follows: 1) equipment placement, 2) equipment installation, 3) wiring, and 4) preliminary operation.

2.7 EQUIPMENT PLACEMENT.

WARNING ENSURE NO PRIMARY POWER IS CONNECTED TO THE TRANSMITTER BEFORE PROCEEDING.

WARNING

The FM-10S/FMi 703 transmitter is designed with access holes in the top of the cabinet to allow for over-head ducting of AC power and control wiring (refer to Figure 3 and Figure 4). The floor must be capable of supporting the total transmitter weight of 713 lbs (324 kg).

Evaluate the installation site and determine location of the transmitter. Once the location is determined, use a forklift to move the transmitter to the desired location. After the transmitter is placed in the desired location, slide the transmitter off the skid. Remove the shipping skid and slide the transmitter to the exact location.

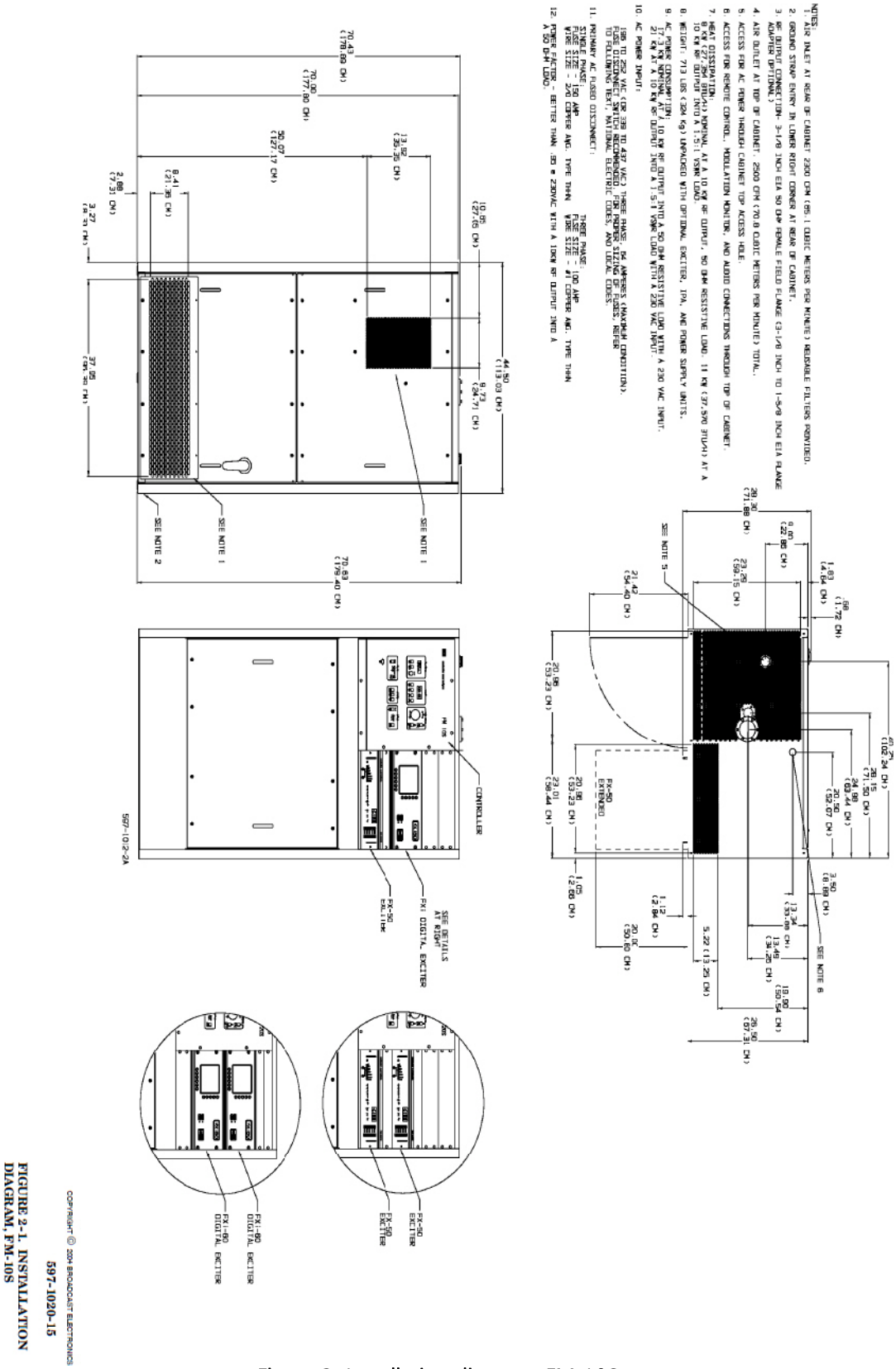

FIGURE 2-1. INSTALLATION DIAGRAM, FM-10S

Figure 3. Installation diagram, FM-10S

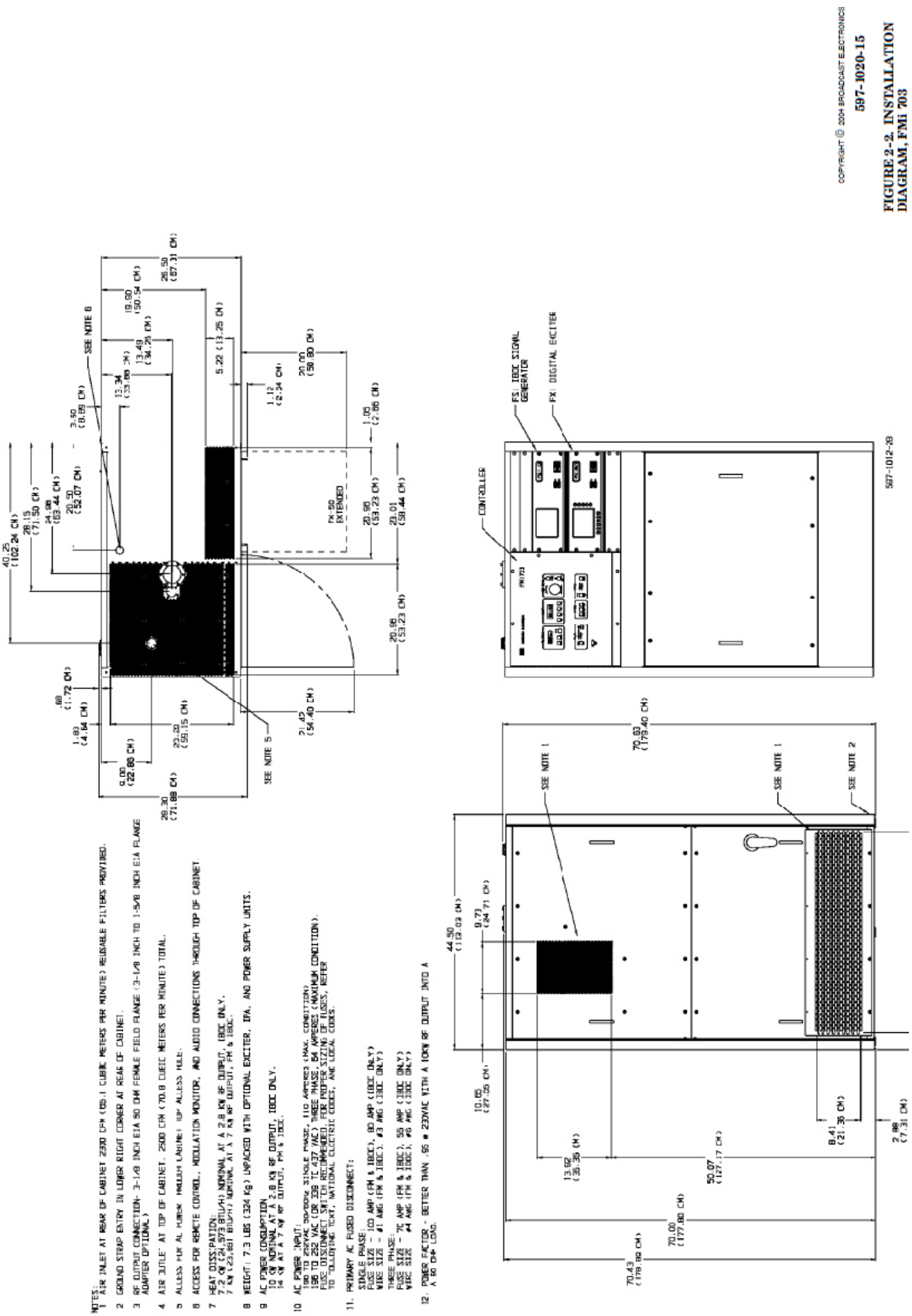

Figure 4. Installation diagram, FMi 703.

2.8 EQUIPMENT INSTALLATION.

WARNING ENSURE NO PRIMARY POWER IS CONNECTED TO THE TRANSMITTER BEFORE PROCEEDING.

WARNING

FM Exciter Installation (FM–10S). The transmitter may be equipped with the standard FX-50 exciter or the optional FXi 60 digital exciter. For transmitters equipped with an FX-50 or FXi 60 exciter, perform the following installation procedure.

Locate the FX-50 or optional FXi 60 exciter.

Refer to FX-50 exciter manual 597-1050 and perform the PRELIMINARY INSTALLATION PROCEDURES to unpack and configure the exciter for the desired operation. For an FXi 60, refer to exciter manual 597-0541.

Place the exciter on the slide-rails (FX-50 only).

Refer to Figure 5, and re-connect the FX-50 or FXi 60 wiring as shown.

WARNING ENSURE NO PRIMARY POWER IS CONNECTED TO THE TRANSMITTER BEFORE PROCEEDING.

WARNING

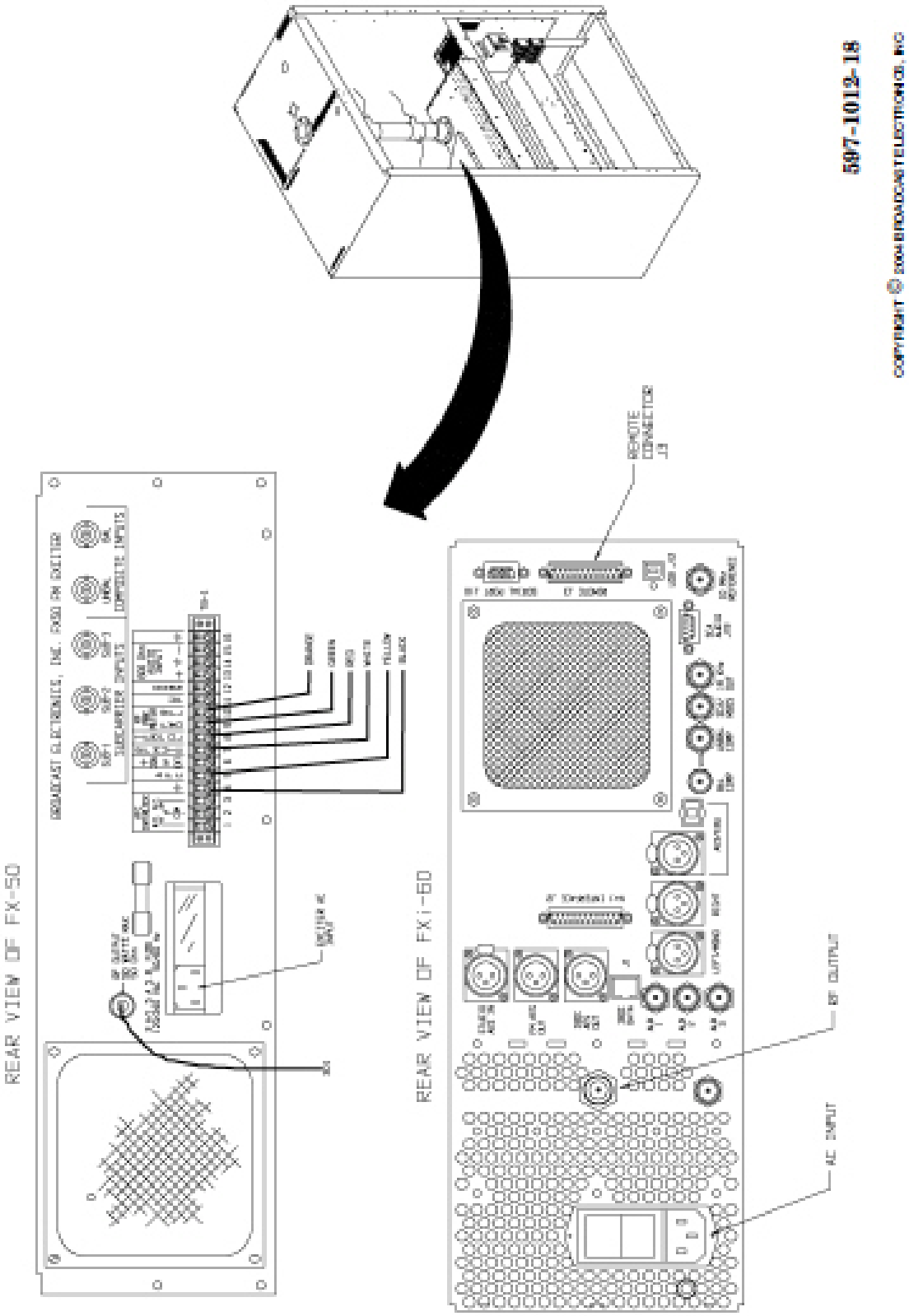

Figure 5. FX-50 wiring.

HD Radio Exciter Installation. The FMi 703 is equipped with a FSi 10 HD Radio Signal Generator and a FXi 60 FM/HD Radio Exciter. Locate these two units and install in the transmitter. ReferenceFigure 6. Note that these can be re-arranged to allow installation of audio processing if necessary.

Utilize the following check list as well as to complete the interconnections between the FXi 60, FSi 10, and FMi 703.

Install FXi 60 in the transmitter.

Install FSi 10 in the transmitter.

Connect 1PPS Out on FSi 10 to 1PPS In on FSi 10

Connect GPS Data Out on FSi 10 to GPS Data In on FSi 10

Connect FSi 10 LVDS IBOC Data to FXi 60 IBOC Data

Connect J3 on FXi 60 Exciter to J1 on the FMi 703 Remote Interface board and to Output 13 (+/-) on the FSi 10.

Connect 10MHz Out on FSi 10 to 10MHz Reference on FXi 60

Connect Main Audio Feed from studio into Studio AES In on FXi 60 (This must be AES/EBU format at 32, 44.1, 48, or 96kbps).

In a low-level combined system or when your existing FM transmitter can take AES input connect FM AES Out from FXi 60 to your FM Audio Processor AES Input. In a high-level combined or separate antenna installation where your existing transmitter requires a composite input, connect the FM AES Out from the FXi 60 directly to the AM/FM AES In on the FSi 10.

Connect IBOC AES Out from FXi 60 to you HD Radio Audio Processor AES Input.

Note: When utilizing one processor for both FM and HD Radio you can use either the FM AES Out or IBOC AES Out from the FXi 60 to drive the AES input on your processor.

In a low-level combined system or when your existing FM transmitter can take AES input connect the FM Audio Processor AES Out to the AM/FM AES input on FSi 10. In a high-level combined or separate antenna installation where your existing transmitter requires a composite input, connect the FM AES Out from the FXi 60 directly to the AM/FM AES In on the FSi 10.

Connect the HD Radio Audio Processor AES Out to the IBOC AES In on FSi 10.

In a low-level combined system connect the AM/FM AES Out to the AES/EBU input on the FXi 60. In a high-level combined or separate antenna system this output would go to your existing FM transmitter. If your existing FM transmitter requires a composite input, connect the AM/FM AES Out from the FSi 10 to the AES input on your FM Audio Processor and connect the composite output to your existing FM transmitter.

If your Studio to Transmitter Link (STL) can support 4kbps of data you can send song artist and title information over the link. Connect the data output from the STL to the IBOC data input on the FSi 10. This type of data can also be sent via Ethernet or Modem.

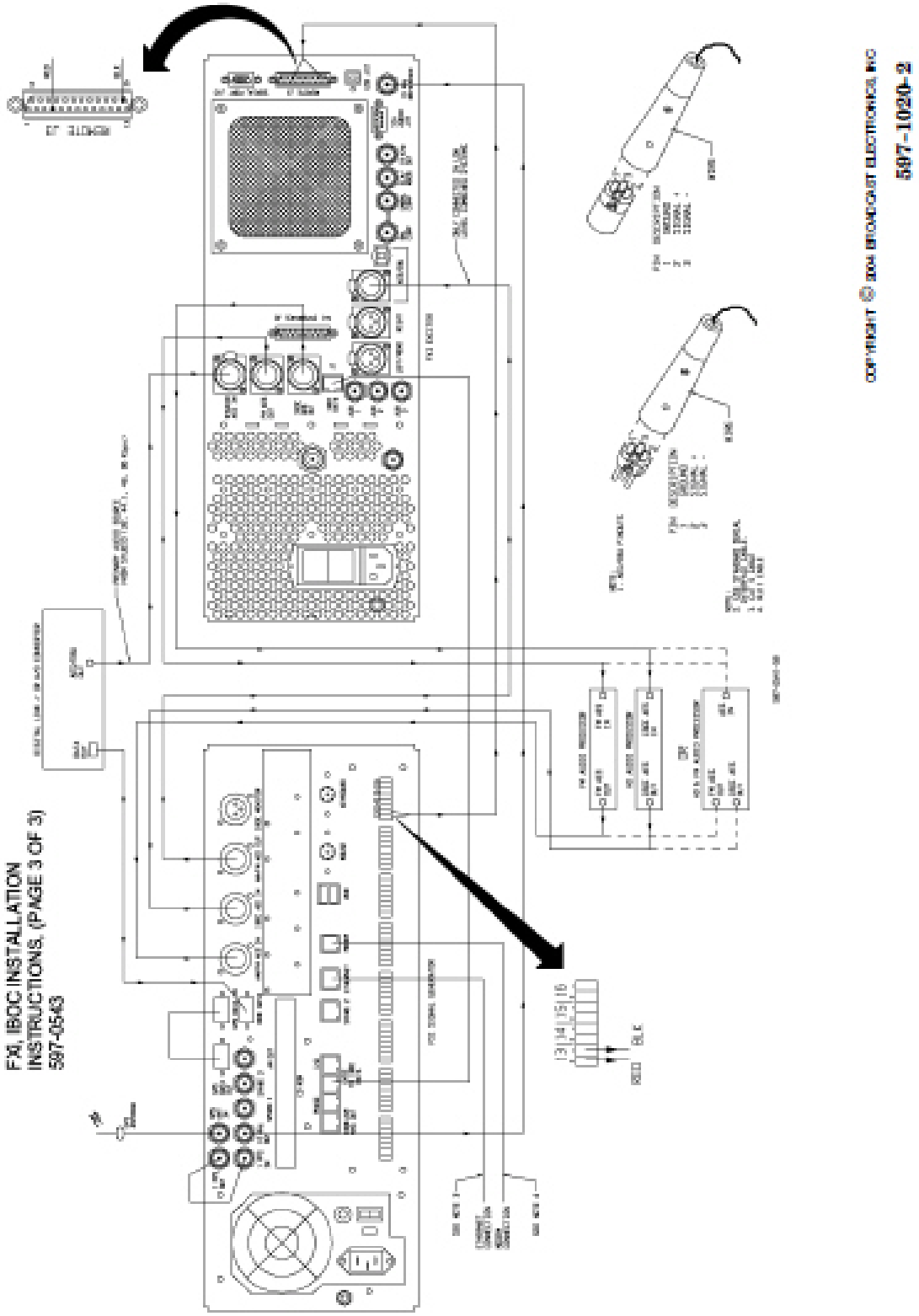

Figure 6. Interconnections between FXi 60, FSi 10 and FMi 703.

2.9 REMOTE CONTROL/STATUS I/O WIRING.

REMOTE CONTROL. The FM-10S/FMi 703 transmitter is designed for complete remote control operation. The transmitter will interface with almost any remote control unit or a diagnostic system. The following text presents a description of the FM-10S/FMi 703 remote control functions and indications.

Remote control connections are interfaced to the transmitter at TB1/TB2 on the remote interface circuit board (refer to). Route and connect the cables to TB1/TB2 as shown. Refer to Figure 8 and the following paragraphs for detailed connections to the remote control I/O board as well as the configuration and setup.

The transmitter controller: 1) provides positive or negative control logic and 2) +4/+2 volt dc remote full-scale meter indications. Positive/negative control is determined by jumper J10 on the supervisor circuit board assembly. Positive control requires the use of a momentary contact to a +5 volt to +12 volt dc signal to activate the function. Negative control requires the use of a momentary contact to ground to activate the function. Remote indication functions: 1) require current limiting resistors and 2) provide up to 100 mA of current for the indicators. +4/+2 volt operation is determined by header J12 on the supervisor circuit board assembly. Refer to Figure 8 and the following text to connect remote control equipment to the system. The transmitter is programmed from the factory for positive remote control operations and +4 volt dc remote meter indications.

Remote Forward/Reflected Power Meter Indications. Remote transmitter forward/reflected power meter indications are located at TB2-1 and TB2-2. The indications can be programmed for +4 volt dc full-scale or +2 volt dc full-scale operation. The transmitter is shipped with the remote forward and reflected power meter indications programmed for +4 volt full-scale operation. The meter full-scale indication is equal to: 1) forward power: +3.92V dc = 10 kW and 2) reflected power: +4V dc = 400 watts. Metering ground is recommended for remote meter ground connections.

Remote PA Power Supply Bus Voltage/Inlet Temperature Meter Indications. Remote PA power supply bus voltage/temperature meter indications are located at TB2-3 and TB2-4. The PA power supply bus voltage indication monitors the transmitter PA power supply bus voltage. The temperature indication monitors the transmitter inlet air temperature. The indications can be programmed for +4 VDC full-scale or +2 VDC full-scale operation. +4/+2 volt operation is determined by header J12 on the supervisor circuit board assembly. The transmitter is shipped with the remote PA power supply bus voltage/inlet temperature meter indications programmed for +4 volt full-scale operation. The meter indications are as follows: 1) Power Supply Bus Voltage + 3.48 V = 45 V and 2) Temperature + 1.25 V = 25 °C. Metering ground is recommended for remote meter ground connections.

Remote PA Current Meter Indications. The remote PA current meter indication is located at TB2-5. The PA current indication monitors the transmitter PA power supply bus current. The indication can be programmed for +4 VDC full-scale or +2 VDC full-scale operation. +4/+2 volt operation is determined by header J12 on the supervisor circuit board assembly. The transmitter is shipped with the remote PA current meter indication programmed for +4 volt full-scale operation. The meter indication is equal to 4V @ 450 A. Metering ground is recommended for remote meter ground connections.

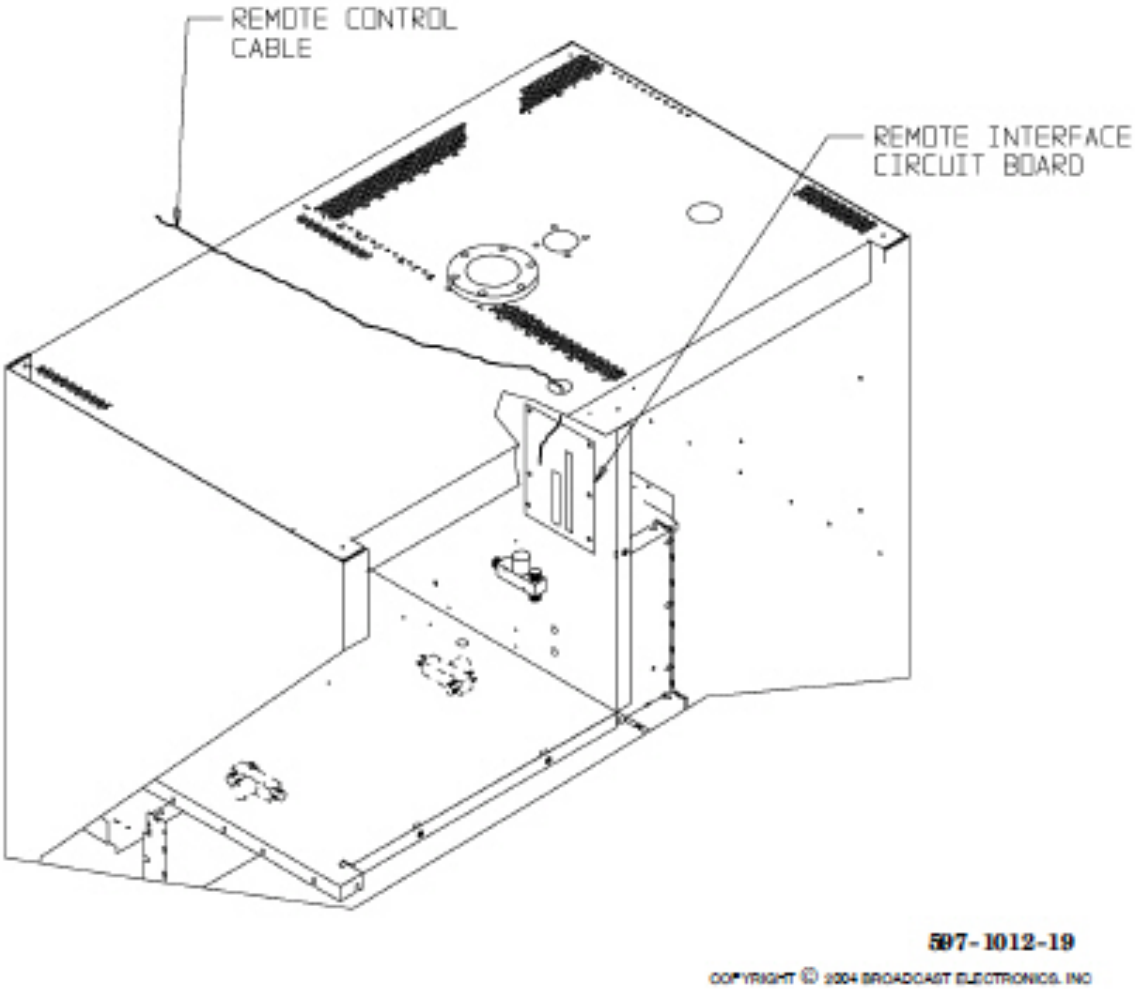

Figure 7. Remote Interface Circuit Board/Connector Location

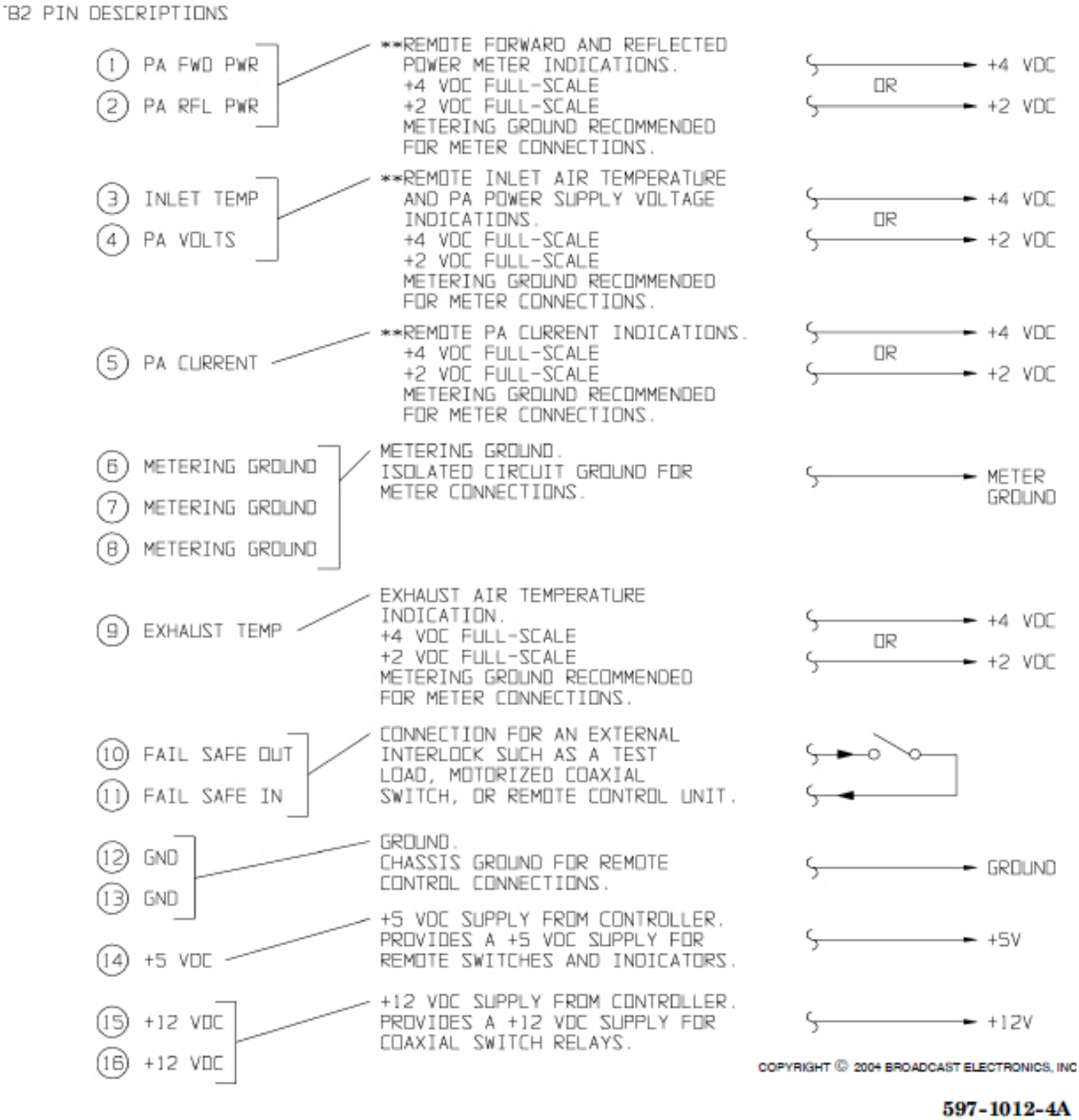

Figure 8. Remote Control Diagram (sheet 1 of 3).

TB1 PIN DESCRIPTIONS

1. STANDBY EXCITER
   - STANDBY EXCITER ON CONTROL.
     POSITIVE CONTROL: MOMENTARY CONTACT TO +5 TO +12 VDC REQUIRED TO SWITCH AND ENABLE STANDBY EXCITER.
     NEGATIVE CONTROL: MOMENTARY CONTACT TO GROUND REQUIRED TO SWITCH AND ENABLE STANDBY EXCITER.

2. STANDBY IPA
   - STANDBY IPA ON CONTROL.
     POSITIVE CONTROL: MOMENTARY CONTACT TO +5 TO +12 VDC REQUIRED TO SWITCH AND ENABLE STANDBY IPA.
     NEGATIVE CONTROL: MOMENTARY CONTACT TO GROUND REQUIRED TO SWITCH AND ENABLE STANDBY IPA.

3. NC — NO CONNECTION

4. TRANSMITTER ON
   - TRANSMITTER ON CONTROL.
     POSITIVE CONTROL: MOMENTARY CONTACT TO +5 TO +12 VDC REQUIRED TO OPERATE TRANSMITTER TO ON.
     NEGATIVE CONTROL: MOMENTARY CONTACT TO GROUND REQUIRED TO OPERATE TRANSMITTER TO ON.

5. TRANSMITTER OFF
   - TRANSMITTER OFF CONTROL.
     POSITIVE CONTROL: MOMENTARY CONTACT TO +5 TO +12 VDC REQUIRED TO OPERATE TRANSMITTER TO OFF.
     NEGATIVE CONTROL: MOMENTARY CONTACT TO GROUND REQUIRED TO OPERATE TRANSMITTER TO OFF.

6. RAISE PA PWR
   - TRANSMITTER RAISE POWER CONTROL.
     POSITIVE CONTROL: MOMENTARY CONTACT TO +5 TO +12 VDC REQUIRED TO RAISE TRANSMITTER POWER.
     NEGATIVE CONTROL: MOMENTARY CONTACT TO GROUND REQUIRED TO RAISE TRANSMITTER POWER.

7. LOWER PA PWR
   - TRANSMITTER LOWER POWER CONTROL.
     POSITIVE CONTROL: MOMENTARY CONTACT TO +5 TO +12 VDC REQUIRED TO LOWER TRANSMITTER POWER.
     NEGATIVE CONTROL: MOMENTARY CONTACT TO GROUND REQUIRED TO LOWER TRANSMITTER POWER.

8. PRESET PA PWR
   - PRESET POWER ON CONTROL.
     POSITIVE CONTROL: SUSTAINED CONTACT TO +5 TO +12 VDC REQUIRED TO ENABLE PRESET POWER.
     NEGATIVE CONTROL: SUSTAINED CONTACT TO GROUND REQUIRED TO ENABLE PRESET POWER.

9. FAULT RESET
   - TRANSMITTER FAULT RESET CONTROL.
     POSITIVE CONTROL: MOMENTARY CONTACT TO +5 TO +12 VDC REQUIRED TO RESET THE FAULT CIRCUIT.
     NEGATIVE CONTROL: MOMENTARY CONTACT TO GROUND REQUIRED TO RESET THE FAULT CIRCUIT.

NOTES:

* POSITIVE/NEGATIVE CONTROL -

1. POSITIVE CONTROL:
   J10 ON SUPERVISOR CIRCUIT BOARD IN POSITION 2-3. FACTORY DEFAULT.
2. NEGATIVE CONTROL:
   J10 ON SUPERVISOR CIRCUIT BOARD IN POSITION 1-2.

** +4V/+2V DC FULL SCALE METER INDICATIONS -

1. +4V DC FULL SCALL METER INDICATIONS - REMOVE P12 ON SUPERVISOR CIRCUIT BOARD.
2. +2V DC FULL SCALL METER INDICATIONS - INSTALL P12 ON SUPERVISOR CIRCUIT BOARD.

597-1012-4B

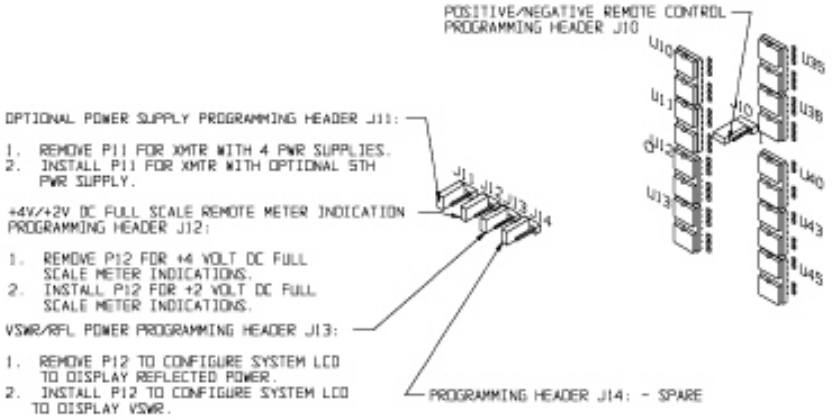

Figure 9. Remote Control Diagram (sheet 2 of 3).

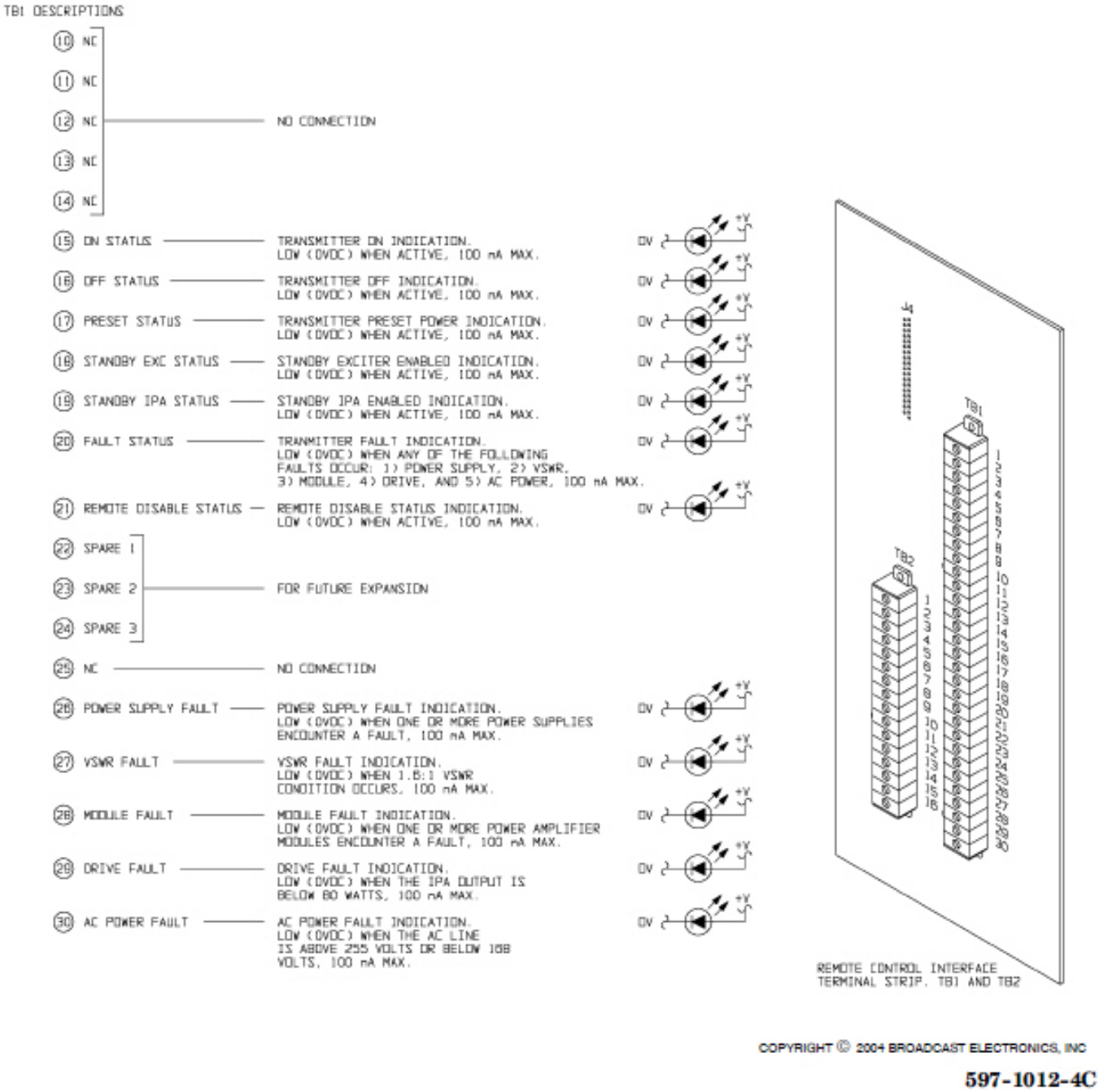

Figure 10. Remote Control Diagram (sheet 3 of 3).

Fail–Safe Out/Fail–Safe In Connection. The FM-10S/FMi 703 provides for two different external fail-safe loops. The fail-safe connection is used for the interfacing of an external interlock to the transmitter such as a test load interlock, motorized coaxial switch, or a remote control unit. The first fail-safe connection is provided at TB2-10 and TB2-11. The fail-safe out connection is located at TB2-10. The fail-safe in connection is located at TB2-11. If a fail-safe connection is desired, connect the device between TB2-10 and TB2-11. The second fail-safe loop has its output on TB1-11, and its return on TB1-10. If the second fail-safe loop is needed, it can be added by cutting off a jumper wire on the board in the place provided and labeled W2.

Remote Standby Exciter ON Control. The standby exciter on function is located at TB1-1. The function can be activated using positive or negative control. Positive control requires the use of a momentary contact to a +5 to +12 VDC signal to operate the standby exciter to on. Negative control requires the use of a momentary contact to ground to operate the standby exciter to on. Positive/negative remote control operation is determined by header J10 on the supervisor circuit board.

Remote Standby IPA On Control. The standby IPA on function is located at TB1-2. The function can be activated using positive or negative control. Positive control requires the use of a momentary contact to a +5 to +12 VDC signal to operate the standby IPA to ON. Negative control requires the use of a momentary contact to ground to operate the standby IPA to ON. Positive/negative remote control operation is determined by header J10 on the supervisor circuit board.

Remote Transmitter On Control. The transmitter on function is located at TB1-4. The function can be activated using positive or negative control. Positive control requires the use of a momentary contact to a +5 to +12 VDC signal to operate the transmitter to on. Negative control requires the use of a momentary contact to ground to operate the transmitter to on. Positive/negative remote control operation is determined by header J10 on the supervisor circuit board.

Remote Transmitter Off Control. The transmitter off function is located at TB1-5. The function can be activated using positive or negative control. Positive control requires the use of a momentary contact to a +5 to +12 VDC signal to operate the transmitter to off. Negative control requires the use of a momentary contact to ground to operate the transmitter to off. Positive/negative remote control operation is determined by header J10 on the supervisor circuit board.

Remote Power Level Raise Control. The transmitter power level raise control is located at TB1-6. The function can be activated using positive or negative control. Positive control requires the use of a momentary contact to a +5 to +12 VDC signal to raise the transmitter power level. Negative control requires the use of a momentary contact to ground to raise the transmitter power level. Positive/negative remote control operation is determined by header J10 on the supervisor circuit board.

Remote Power Level Lower Control. The transmitter power level lower control is located at TB1-7. The function can be activated using positive or negative control. Positive control requires the use of a momentary contact to a +5 to +12 VDC signal to lower the transmitter power level. Negative control requires the use of a momentary contact to ground to lower the transmitter power level. Positive/negative remote control operation is determined by header J10 on the supervisor circuit board.

Remote Preset PA Power Control. The transmitter can be operated to a preset power level by using the preset PA power control function. The preset power function is located at TB1-8. The function can be activated using positive or negative control. Positive control requires the use of a sustained contact to a +5 to +12 VDC signal to operate the transmitter to a preset power level. Negative control requires the use of a sustained contact to ground to operate the transmitter to a preset power level. Positive/negative remote control operation is determined by header J10 on the supervisor circuit board.

Remote Fault Reset Control. The fault reset control is designed to reset the transmitter circuitry following a problem. The reset control is located at TB1-9. The function can be activated using positive or negative control. Positive control requires the use of a momentary contact to a +5 to +12 VDC

signal to reset the transmitter fault circuitry. Negative control requires the use of a momentary contact to ground to reset the transmitter fault circuitry. Positive/negative remote control operation is determined by header J10 on the supervisor circuit board.
Transmitter On Indications. The transmitter on indicator provides a signal to indicate when the transmitter is enabled. The transmitter on indicator is located at TB1-15. The indicator will go LOW (0 VDC) to indicate when the transmitter is enabled.

Transmitter Off Indications. The transmitter off indicator provides a signal to indicate when the transmitter is disabled. The transmitter off indicator is located at TB1-16. The indicator will go LOW (0 VDC) to indicate when the transmitter is disabled.

Preset Power Indications. The transmitter preset power indicator provides a signal to indicate when the transmitter is operated to the preset power mode. The preset power indicator is located at TB1-17. The indicator will go LOW (0 VDC) to indicate when the transmitter has been operated to the preset power mode.

Standby Exciter Indications. The standby exciter indicator provides a signal to indicate when the standby exciter has been enabled. The standby exciter indicator is located at TB1-18. The indicator will go LOW (0 VDC) to indicate when the standby exciter has been enabled.

Standby IPA Indications. The standby IPA indicator provides a signal to indicate when the standby IPA has been enabled. The standby IPA indicator is located at TB1-19. The indicator will go LOW (0 VDC) to indicate when the standby IPA has been enabled.

Transmitter Fault Indications. The transmitter fault indicator provides a signal to indicate when any of the following faults occur: 1) power supply, 2) VSWR, 3) module, 4) RF drive, or 5) AC power. The transmitter fault indicator is located at TB1-20. The indicator will go LOW (0 VDC) when active.

Remote Disable Status Indications. The remote disable indicator provides a signal to indicate when the transmitter remote control disable feature is active. The transmitter remote disable status indicator is located at TB1-21. The indicator will go LOW (0 VDC) when active.

+5 VDC Supply. A +5 VDC supply is provided for the remote control switches and indicators. The +5 volt dc supply is located at TB2-14. The supply can provide up to 20 mA for indicator and switch operations.

+12 VDC Supply. A +12 VDC supply is provided for coaxial switch control relays. The +12 VDC supply is located at TB2-15 and TB2-16. The supply can provide up to 50 mA for control operations.

PA Power Supply Fault Indications. The PA power supply fault indicator provides a signal to indicate when one or more power supplies encounter a fault. The PA power supply fault indicator is located at TB1-26. The indicator will go LOW (0 VDC) when active.

VSWR Indications. The VSWR fault indicator provides a signal to indicate when a 1.45: 1 VSWR condition occurs. The VSWR fault indicator is located at TB1-27. The indicator will go LOW (0 VDC) to indicate the presence of a 1.45: 1 VSWR condition.

PA Module Fault Indications. The PA module fault indicator provides a signal to indicate when one or more PA RF power modules encounter a fault. The PA RF power module fault indicator is located at TB1-28. The indicator will go LOW (0 VDC) when active.

Drive Fault Indications. The drive fault indicator provides a signal to indicate when the IPA output is below 80 watts. The drive fault indicator is located at TB1-29. The indicator will go LOW (0 VDC) to indicate when the IPA output is below 80 watts.

AC Power Fault Indications. The AC power supply fault indicator provides a signal to indicate when: 1) the AC line is above 255 volts or below 168 volts or 2) a loss-of-phase condition occurs. The AC power supply fault indicator is located at TB1-30. When the transmitter is re-energized following a fault, the indicator will go LOW (0 VDC) to indicate an ac power fault condition.

Metering Ground. Metering ground is an isolated circuit ground for remote control meter connections. Metering ground is to be used to remedy ground loops or to eliminate RFI conditions. Metering ground is located at TB2-6 through TB2-8.

Chassis Ground. Chassis ground is designed to be used for remote control connections. Chassis ground is located at TB2-12 and TB2-13.

No Connection. No connection at TB1-3, TB1-10 through TB1-14 and TB1-25.

Spare Connections. Connections for future additional remote control or indications are located at TB1-22 through TB1-24.

OPTIONAL POWER SUPPLY PROGRAMMING. The FM-10S/FMi 703 transmitter can be equipped with an optional power supply in each cabinet. If the unit is equipped with fifth power supply assemblies, jumper P11 on the supervisor circuit board must be installed. Refer to Figure 8 and ensure P11 is installed on the supervisor circuit board.

VSWR/REFLECTED POWER DISPLAY PROGRAMMING. The FM-10S/FMi 703 transmitter output power is displayed by the SYSTEM LCD display. The LCD display presents transmitter forward power, reflected power, PA voltage, and PA current. The reflected power can be displayed using a VSWR or reflected power format. Header P13 programs the display to present reflected power or VSWR (refer to Figure 8). When P13 is removed, the display will present reflected power. When P13 is installed, VSWR will be displayed. The transmitter is shipped from the factory programmed for reflected power display operation.

MODULATION MONITOR RECEPTACLE. The FM-10S/FMi 703 transmitter is equipped with a modulation monitor receptacle. The receptacle is located near the RF output transmission line. Refer to and connect the modulation monitor to the modulation monitor receptacle. The receptacle provides a 2 V RMS sample in a 50 ohm load at 20 kW for monitoring operations.

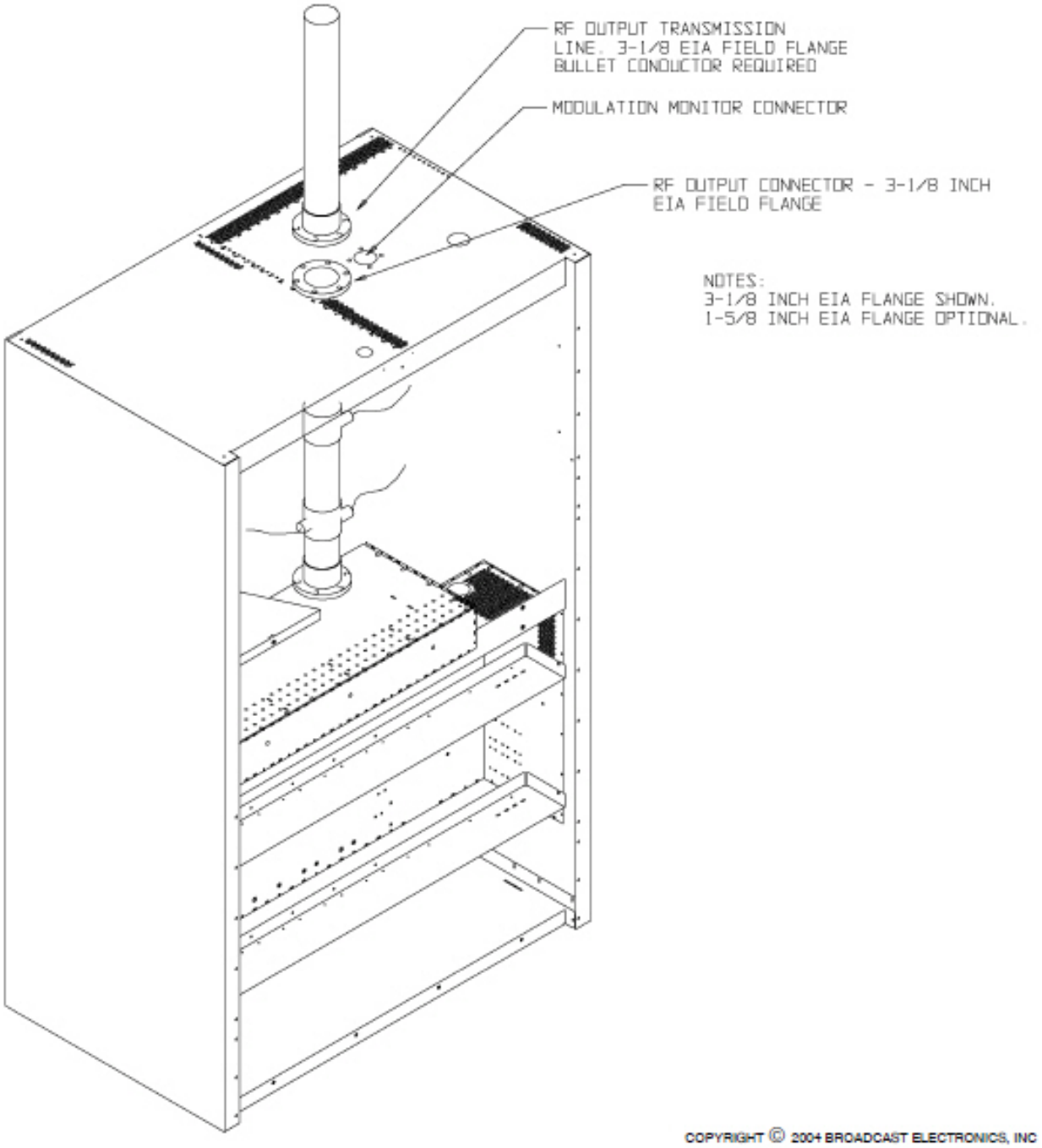

597-1012-6

Figure 11. Modulation Monitor/ RF Output Connections.

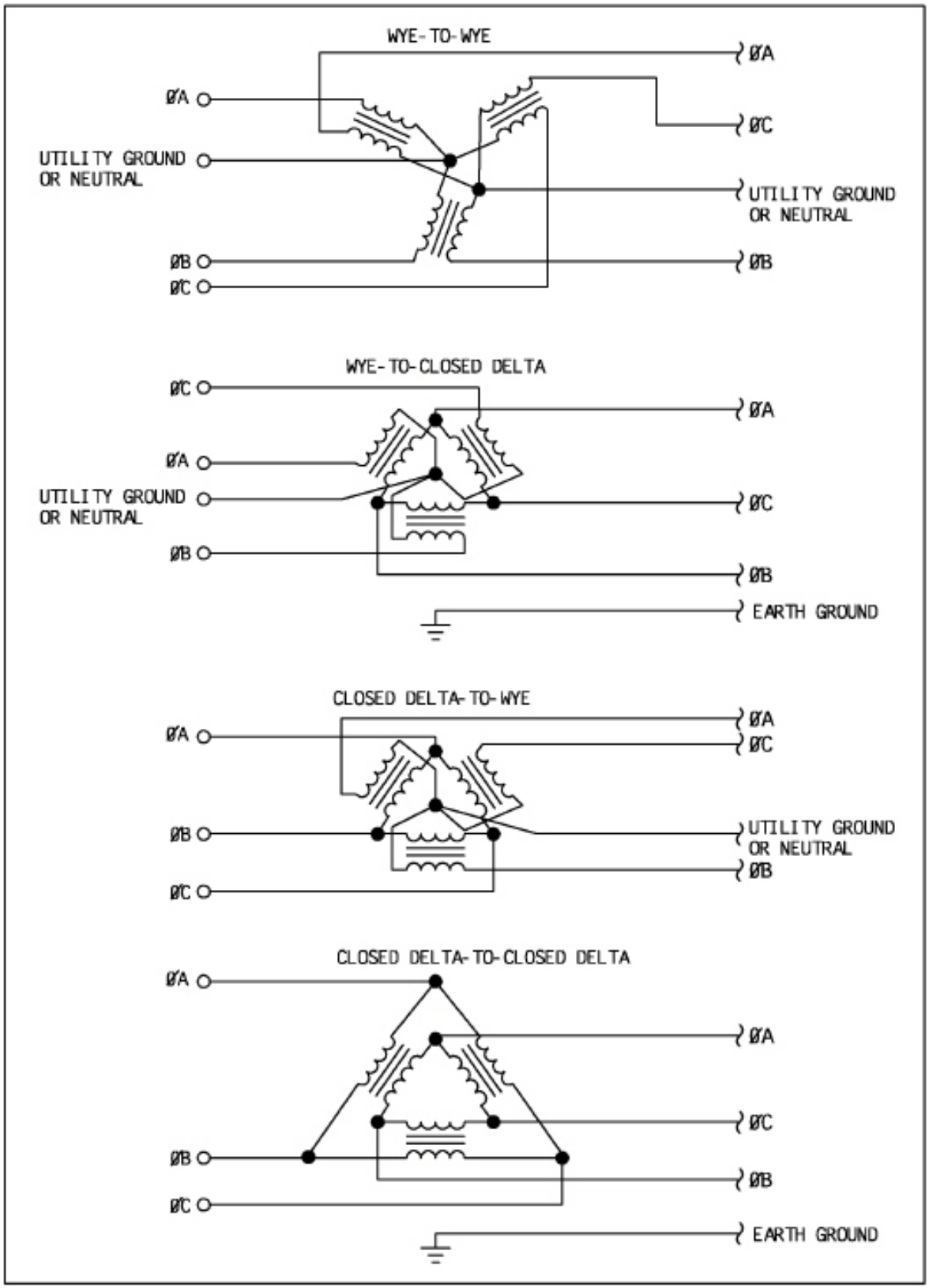

Figure 12. Acceptable AC Power Input Configurations.

AUDIO INPUT CONNECTIONS. Audio input connections for the FM-10S/FMi 703 transmitter are located on the exciter rear panel. For an FX-50, refer to FX-50 manual 597-1050 and perform the WIRING procedures in SECTION II, INSTALLATION. For an FXi 60, refer to manual 597-0541.

WARNING ENSURE PRIMARY POWER IS DISCONNECTED TO THE TRANSMITTER BEFORE PROCEEDING.

WARNING

RF OUTPUT TRANSMISSION LINE CONNECTION. The FM-10S/FMi 703 transmitter RF output connection is located on the transmitter top-panel (refer to Figure 11). The connection is a 3 1/8 inch female EIA field flange. Refer to and connect the RF transmission line to the transmitter using a 3 1/8 inch male EIA field flange and a bullet.

WARNING ENSURE PRIMARY POWER IS DISCONNECTED BEFORE PROCEEDING.

WARNING

WARNING ENSURE AN EARTH GROUND CONDUCTOR IS SECURELY CONNECTED TO THE TRANSMITTER CHASSIS GROUND LUG.

WARNING

GROUND. The FM-10S/FMi 703 transmitter is equipped with a chassis ground system for operating safety (refer to Figure 12 and Figure 13). The ground system requires the connection of an earth ground for both sides of the chassis. Refer to Figure 12 and Figure 13 and connect an earth ground to the chassis ground lugs using 2 inch (5.08 cm) wide copper straps.

WARNING ENSURE PRIMARY POWER IS DISCONNECTED BEFORE PROCEEDING.

WARNING

WARNING ENSURE AN EARTH GROUND CONDUCTOR IS SECURELY CONNECTED TO THE TRANSMITTER CHASSIS GROUND LUG.

WARNING

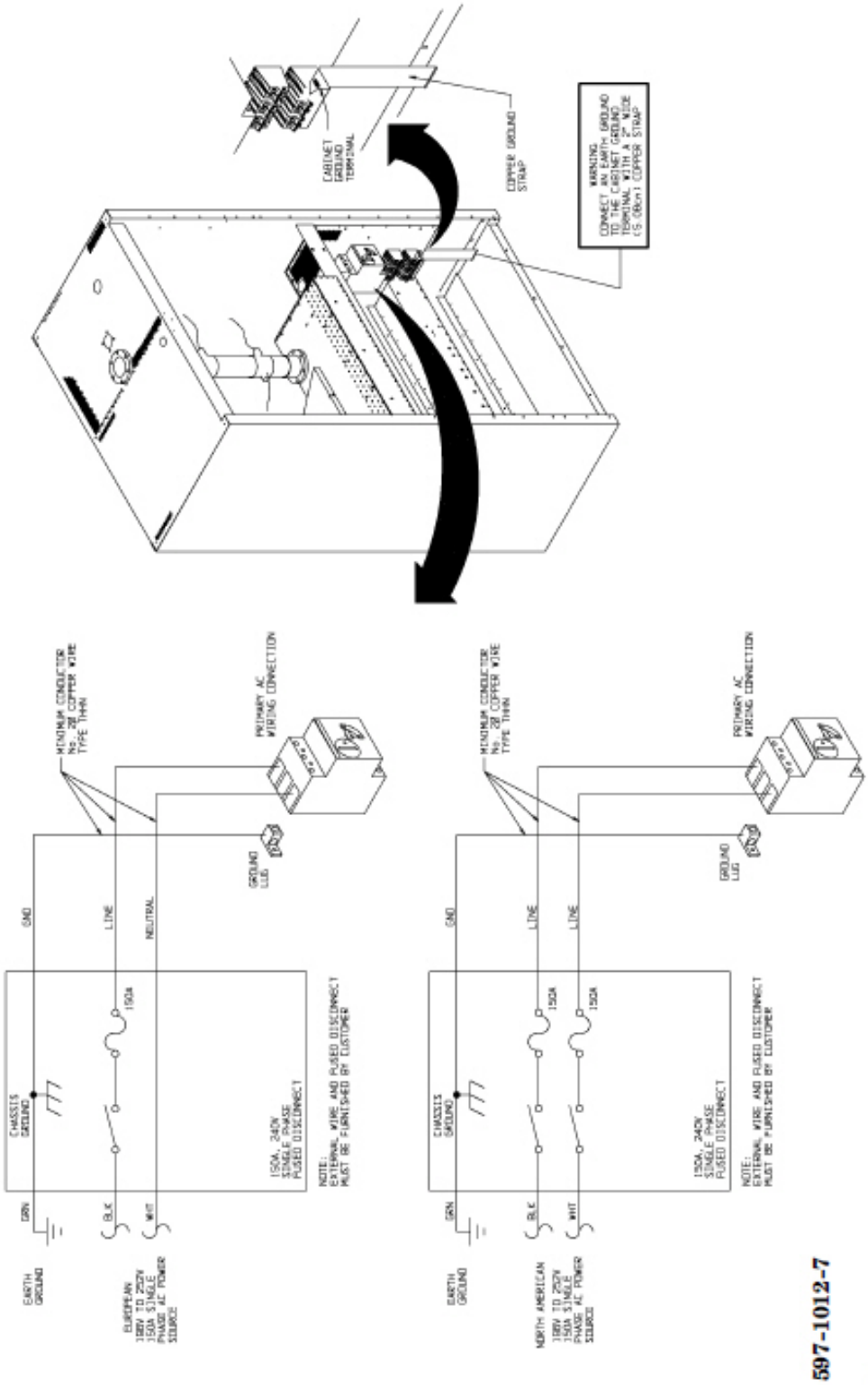

Figure 13. FM-10S Single Phase AC Power Connections.

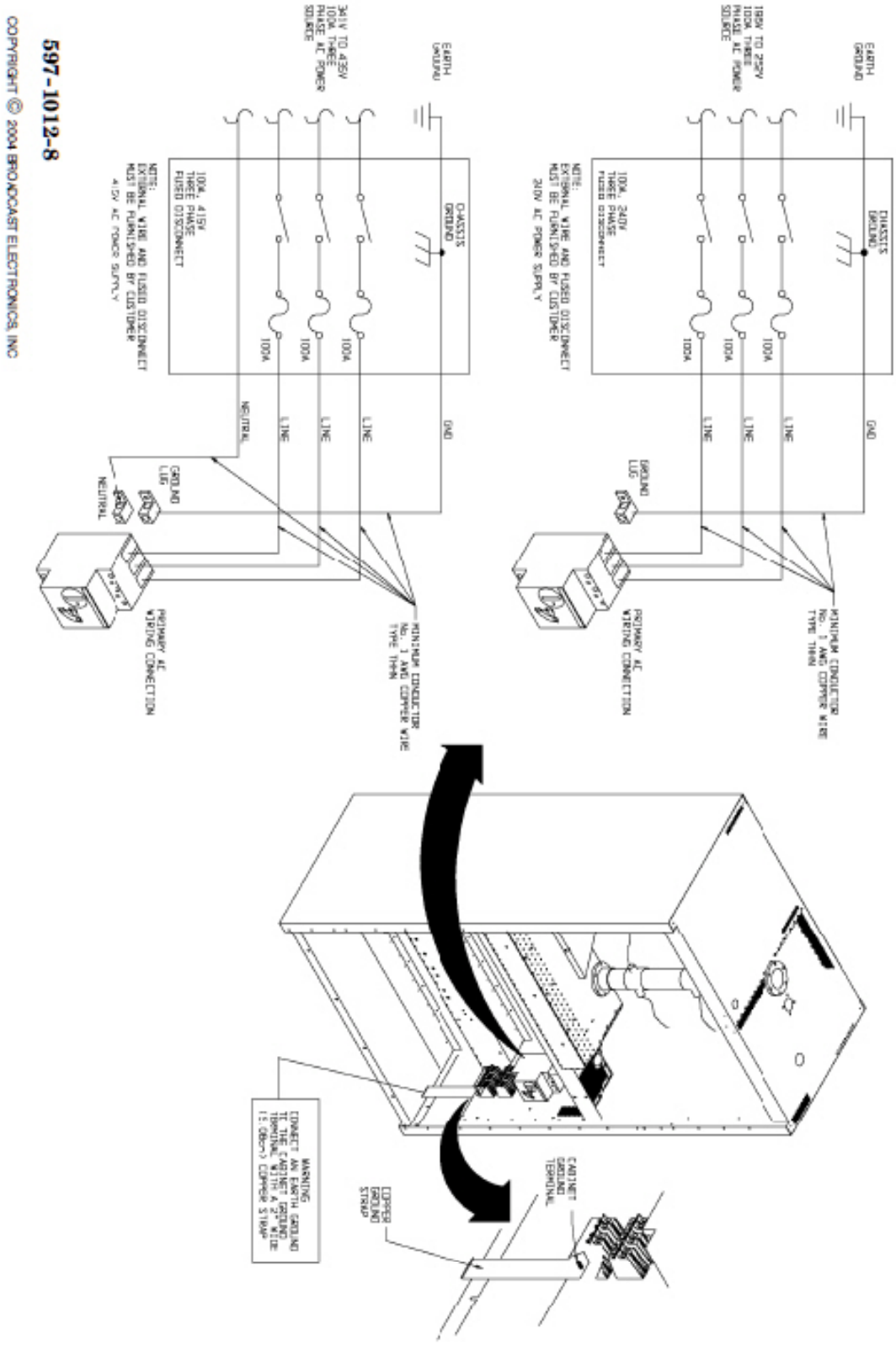

597-1012-8

Figure 14. FM-10S Three Phase AC Power Connections.

AC POWER CONNECTIONS. The FM-10S/FMi 703 can be configured to operate from: 1) a 196 to 252 VAC three-phase closed delta or WYE supply at 100 A per phase, or 2) a 340 to 435 VAC three-phase 4-wire WYE supply at 100 A per phase. Refer to Figure 14. The FM-10S/FMi 703 transmitter requires two 100 A disconnect service boxes - one for each side of the transmitter - as well as a 200 A master disconnect service box. For operating safety, the power source must be routed to the transmitter through a fused power disconnect (refer to Figure 12 and Figure 13).

WARNING ENSURE PRIMARY POWER IS DISCONNECTED BEFORE PROCEEDING.

WARNING

Exciter AC Power Connections. The exciter AC power source is provided by the transmitter. The line cord is located near the exciter rear-panel inside the accessory equipment enclosure. Connect the AC power cord from the transmitter to the exciter. The FX-50 operates from a 194V to 266V 50/60 Hz power source. The FXi 60 operates from a 90V to 264V 50/60 Hz power source.

FSi 10 AC Power Connections. It is recommended that the FSi 10 power source be supplied by a UPS due to the long boot-up time of this device. The FSi 10 power supply can be configured to operate on either 110VAC or 220VAC via a switch on the rear of the unit. Prior to connecting AC to this device ensure switch is in proper position for the AC power source being used. The unit comes configured from the factory with this switch set at the 220VAC position.

WARNING THE FSI 10 CAN OPERATE ON EITHER 110VAC OR 220VAC. IT IS CONFIGURED FROM THE FACTORY FOR 220VAC OPERATION.

WARNING

WARNING IF YOU ARE USING A UPS TO BACK UP THE FSI 10, ENSUE THE VOLTAGE INPT SWITCH IS IN THE PROPER POSITION PRIOR TO APPLYING POWER AND TURNING ON THE UNIT.

WARNING

Main AC Input – Single Phase. Refer to Figure 13 and connect the 150a single phase service to the AC input panel through a fused service disconnect as shown. Connect the utility company ground conductor securely to the ground terminal as shown.

Main AC Input – Three Phase. Refer to Figure 14 and connect the 100a three phase service to the AC input panel through a fused service disconnect as shown. For 380 volt WYE systems, ensure the neutral conductor is connected to the NEUTRAL terminal. Connect the utility company ground conductor securely to the ground terminal as shown.

Optional Equipment AC Power Connections. The FM-10S/FMi 703 transmitter is designed for the installation of optional equipment such as a stereo generator, SCA generator, or a remote control system. If optional equipment is installed in the transmitter, connect the optional equipment line cords to the AC receptacles located near the exciter rear-panel.

2.10 PRELIMINARY OPERATION.

NOTE DO NOT REDUCE THE EXCITER OUTPUT POWER PRIOR TO ENABLING THE TRANSMTITER.

NOTE

The following text presents procedures for the preliminary operation of the FM-10S/FMi 703 transmitter. The procedures will reference the factory test data sheets which are shipped with the transmitter. Locate the factory test data sheets. Differences in the values obtained during actual operation may be noted due to differences in primary power and antenna systems. Refer to the following text and perform the procedures to initially operate the FM-10S/FMi 703 transmitter.

Ensure the appropriate AC power supply is applied to the transmitter.

Operate the rear panel AC ON/OFF switch to ON. The following events will occur:

1. The MULTIMETER MODULE MODE switch/indicator will illuminate.
2. The SYSTEM FORWARD POWER switch/indicator will illuminate.
3. The POWER CONTROL OFF switch/indicator will illuminate.
4. The STATUS FAILSAFE/INTERLOCK indicators will illuminate.

If no transmitter front-panel indicators illuminate, the transmitter may have detected an AC power line problem. If this condition occurs, ensure: 1) the AC power supply is between 255 and 168 volts and 2) all three AC line phases are present.

If the FAIL-SAFE indicator does not illuminate, perform the following procedure.

WARNING DISCONNECT ALL TRANSMITTER PRIMARY POWER BEFORE PROCEEDING.

WARNING

1. Disconnect the AC power.
2. Check the fail-safe switch and connection to TB2-10 and TB2-11 on the remote control interface circuit board.
3. Once the problem is located and repaired, continue the preliminary operation procedure.

Ensure the transmitter SYSTEM FWD POWER switch/indicator is illuminated. The MULTIMETER will indicate 0 watts forward power.

Depress the SYSTEM ON switch/indicator to illuminate the switch/indicator.

For an FX-50, depress the exciter MULTIMETER FWD switch. The exciter MULTIMETER will indicate the forward power recorded in the factory test data sheets. For an FXi 60, the forward power is displayed on the GUI interface. The GUI display will indicate the forward power recorded in the factory test data

sheets.

Adjust the POWER CONTROL knob until the MULTIMETER FWD indicates the forward power level recorded in the factory test data sheets. If the FAULTS RESET Switch/indicator illuminates, proceed as follows:

1. If the RESET switch/indicator illuminates, proceed as follows:

    A. If the POWER SUPPLY indicator illuminates, the MULTIMETER will automatically display the number of the power supply containing the fault. Once the power supply number is determined, refer to SECTION V, MAINTENANCE and perform the TROUBLESHOOTING procedures to locate the problem.

    B. If the VSWR indicator illuminates, a 1.45: 1 condition or greater is present at the transmitter output. Disconnect the transmitter AC power and remove the condition from the transmitter output.

    C. If the MODULE indicator illuminates, one of the transmitter RF amplifier or IPA modules contains a fault. Operate the MUTIMETER MODULE MODE and FUNCTION switches to locate the module with the fault. The MODULE OUT, HIGH CURRENT, or LOW POWER.

    D. If the DRIVE indicator illuminates, the IPA module or the exciter output power is low. Refer to SECTION V, MAINTENANCE and perform the TROUBLESHOOTING procedures to locate the problem.

When the desired transmitter output power is obtained, depress the following switch/indicators and compare the indications with the values recorded in the factory test data sheets. The values should be approximately equal to the values recorded in the test data sheets.

1. SYSTEM FWD POWER

2. SYSTEM RFL POWER

3. PA VOLTAGE

4. PA CURRENT

3 OPERATION

This section identifies all controls and indicators associated with the FM-10S/FMi 703 transmitter and provides standard operating procedures.

3.1 CONTROLS AND INDICATORS

Figure 15 presents the location of all controls and indicators associated with normal operation of the FM-10S/FMi 703 transmitter. Table 3 presents the function of each control or indicator. Refer to and Table 3 for a description of the controls and indicators associated with the FM-10S/FMi 703 transmitter.

Table 3. FM-10S/FMi 703 CONTROLS AND INDICATORS.

INDEX NO.	NOMENCLATURE	FUNCTION
1	AC ON/OFF Switch/Circuit Breaker	Controls the application of ac power to the transmitter. The switch/circuit breaker is equipped with three positions: 1) On, 2) Off, and 3) tripped.
2	MULTIMETER LCD	A 2-line 16 character LCD used to present the module operating parameters.
3	MULTIMETER MODULE MODE	When illuminated, used to select module 1 though 16, the on-air IPA, the on-air exciter, the PAV/PAI, the reject load, low-pass filter 1 or 2, or the power supply 1 through 5 for display on the MULTIMETER.
4	MULTIMETER FUNCTION MODE	When illuminated, used to select several operating functions for modules 1 through 16, the on-air IPA, the on-air exciter, reject load, low-pass filter 1 and 2 and power supplies 1 through 5. The following text presents the devices and the functions to be displayed. Module – Forward Power Reflected Power Current Temperature in ˚C IPA – Forward Power Reflected Power Current Temperature in ˚C Exciter - Forward Power Reflected Power Temperature (˚C) – Reject Load (IPA Splitter) Inlet Low-Pass Filter 1 and 2 – Forward Power Power Supply – Selects power supply 1 through 5
5	MULTIMETER Rotary Select Control	Used to select module mode or function mode options as determined by the MODULE MODE and FUNCTION MODE switch/indicators. When the MODULE MODE switch/indicator is illuminated, the control can be used to select a device such as a module or the exciter, When the FUNCTION MODE switch/indicator is illuminated, the control can be used to select a function parameter.
6	SYSTEM LCD	A 4-digit LCD used to show system operating parameters, which include: transmitter forward power, reflected power, PA voltage, and PA current.

7	SYSTEM FORWARD POWER Switch/Indicator	When illuminated, used to configure the SYSTEM LCD to display the transmitter forward power in kilowatts.
8	SYSTEM REFLECTED POWER Switch/Indicator	When illuminated, used to configure the SYSTEM LCD to display the transmitter reflected power in kilowatts.
9	SYSTEM PA VOLTAGE Switch/Indicator	When illuminated, used to configure the SYSTEM LCD to display average PA power supply voltage of right and left cabinets.
10	SYSTEM PA CURRENT Switch/Indicator	When illuminated, used to configure the SYSTEM LCD to display the total transmitter PA power supply current in amperes (sum of right and left cabinets).
11	POWER CONTROL Rotary LOWER/RAISE Control	Used to raise or lower the transmitter output power as shown on the SYSTEM LCD. Clockwise rotation raises the transmitter output power. Counterclockwise rotation lowers the transmitter output power.
12	POWER CONTROL ON Switch/Indicator	SWITCH: Enables the transmitter RF output by unmuting the exciter, power amplifier modules, and the PA power supplies. INDICATOR: Illuminates to indicate the transmitter RF output is enabled.
13	POWER CONTROL OFF Switch/Indicator	SWITCH: Disables the transmitter RF output by muting the exciter, power amplifier modules, and the PA power supplies. INDICATOR: Illuminates to indicate the transmitter RF output is disabled.
14	STATUS REMOTE DISABLE Switch/Indicator	SWITCH: Controls the transmitter remote control operations. INDICATOR: Illuminates to indicate transmitter remote control operation is disabled. Extinguishes to indicate transmitter remote control operation is enabled.
15	STATUS FAIL-SAFE Indicator	Illuminates to indicate the fail-safe interlock is closed. Equipment typically connected to the failsafe interlock include: 1) a test load, 2) a motorized coaxial switch, or 3) a remote control unit. Extinguishes to indicate fail-safe interlocks are open.
16	STATUS INTERLOCK	Not used. Illuminates green.
17	STATUS PRESET POWER Switch/Indicator	SWITCH: Selects transmitter operation at a preset RF power output level. INDICATOR: Illuminates to indicate the transmitter operation at a preset RF power level (such as half power when illuminated).
18	OPTIONS STANDBY IPA CONTROL Switch/Indicator	SWITCH: Selects and enables transmitter control cabinet standby IPA. This is accomplished by: 1)de-energizing the main IPA, 2) operating the coaxial switch to the standby IPA position, and 3) enabling the IPA. INDICATOR: Illuminates to indicate the standby IPA is enabled.
19	OPTIONS STANDBY IPA CONTROL Switch/Indicator	Is in parallel with *18* above. Used on FM-20S/FMi 1405 to control the IPA in the Auxiliary cabinet.
20	OPTIONS STANDBY EXCITER Switch/Indicator	SWITCH: Selects and enables transmitter standby Exciter. This is accomplished by: 1)de-energizing the main Exciter, 2) operating the coaxial switch to the standby Exciter position, and 3) enabling the standby Exciter. INDICATOR: Illuminates to indicate the standby Exciter is enabled.
21	FAULTS DRIVE Indicator	Illuminates to indicate IPA output is below 80 watts.
22	FAULTS MODULE Indicator	Illuminates to indicate a fault in one or more RF power amplifier modules.
23	FAULTS VSWR	Illuminates to indicate a 1.5:1 or greater VSWR condition is

	Indicator	present at the RF output.
24	RTDS PORT	A modem port used for the connection of the Broadcast Electronics RTDS (remote transmitter diagnostic system).
25	FAULTS AC POWER Indicator	Illuminates to indicate: 1) the AC power supply is below 168 volts or above 255 volts or 2) a loss-of-phase condition is present. The indicator will not illuminate until AC power is returned to the transmitter.
26	FAULTS POWER SUPPLY Indicator	Illuminates to indicate a fault in one or more PA power supply modules.
27	FAULTS RESET Switch/Indicator	SWITCH: Clears the transmitter fault circuitry if: 1) the switch is depressed and 2) the fault condition is removed. INDICATOR: Illuminates to indicate: 1) an RF power amplifier module fault, 2) a power supply module fault, 3) a high reflected power condition, 4) a drive fault, or 5) an AC power fault.

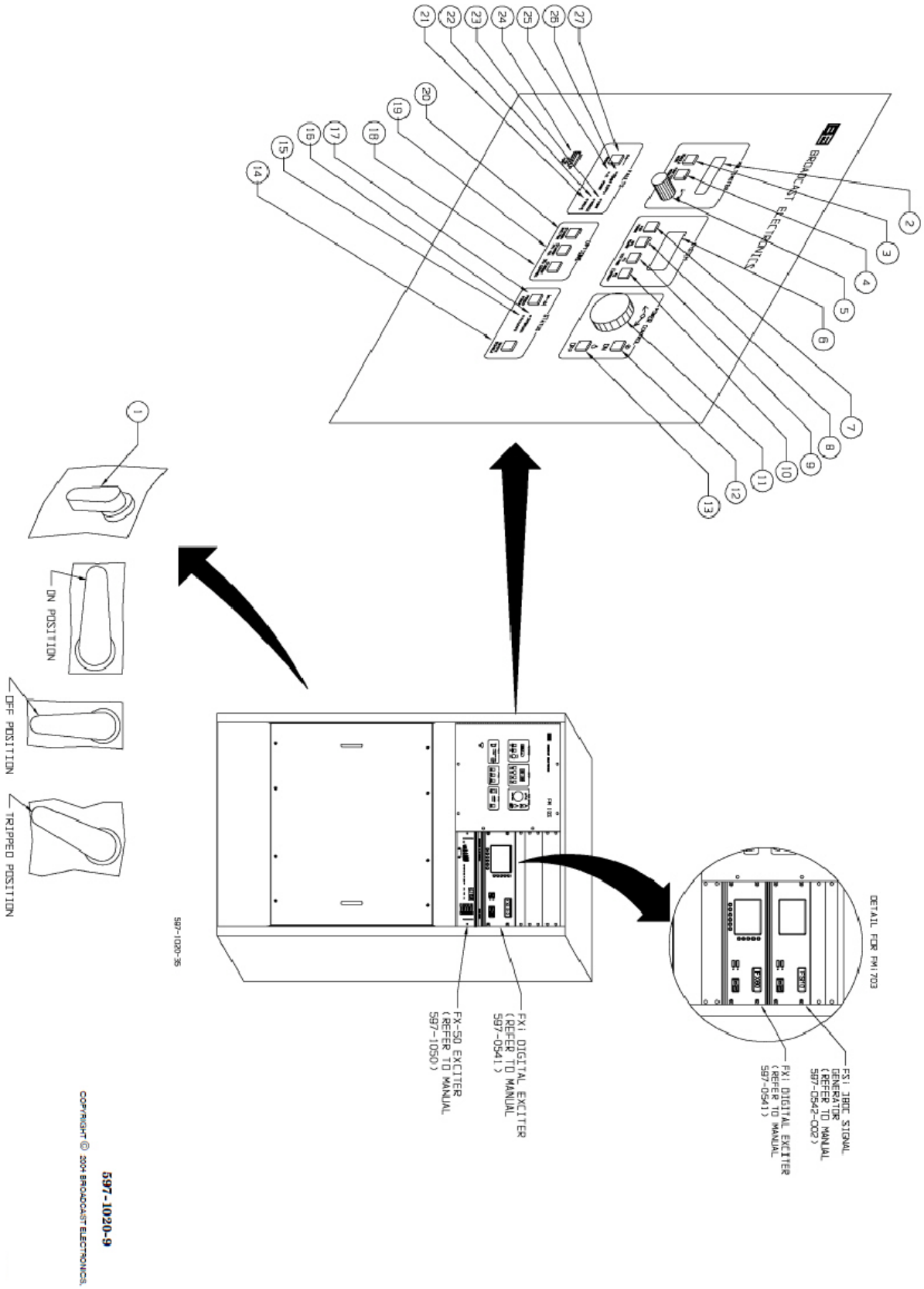

Figure 15. FM-10S/FMi 703 Controls and Indicators.

3.2 OPERATION

NOTE ENSURE THE TRANSMITTER IS COMPLETELY INSTALLED PRIOR TO PERFORMING THE FOLLOWING PROCEDURES.

NOTE

NOTE THE TRANSMITTER WILL NOT OPERATE WITH MORE THAN 4 RF POWER AMPLIFIER MODULES REMOVED FROM MODULE LOCATIONS 1 THROUGH 8 OR 9 THROUGH 16. ENSURE NO MORE THAN 4 RF POWER AMPLIFIER MODULES ARE REMOVED FROM MODULE LOCATIONS 1 THROUGH 8 OR 9 THROUGH 16.

NOTE

3.2.1 TURN-ON.

Operate the rear panel AC ON/OFF switch/circuit breaker to ON. The following events will occur:

1. The MULTIMETER MODULE MODE switch/indicator will illuminate.

2. The SYSTEM FWD PWR switch/indicator will illuminate.

3. The POWER CONTROL OFF switch/indicator will illuminate.

4. The STATUS FAILSAFE/INTERLOCK indicators will illuminate.

If no front-panel indicators illuminate the transmitter may have detected an AC line problem. Refer to AC LINE INTERRUPT - HIGH/LOW AC LINE AND LOSS-OF-PHASE CONDITIONS in the following text.

Observe the transmitter front-panel switches and indicators. The transmitter switches and indicators will display normal operating conditions. If the FAULTS RESET indicator displays a fault condition, depress the FAULTS RESET switch/indicator. If the fault condition is not cleared: 1) operate the AC ON/OFF switch/circuit breaker to OFF and 2) Refer to SECTION V, MAINTENANCE and perform the TROUBLESHOOTING procedures to locate the problem.

Depress the POWER CONTROL ON switch/indicator to activate the transmitter. The POWER CONTROL ON switch/indicator will illuminate.

Operate the SYSTEM LCD to observe the transmitter forward and reflected power indications by performing the SYSTEM LCD OPERATION procedure in the following text.

Operate the MULTIMETER to observe the transmitter control and PAV/PAI, on-air IPA, on-air exciter, low-pass filter, reject load, and control and auxiliary power supply module operating parameters by performing the MULTIMETER OPERATION procedure in the following text.

Adjust the transmitter output power by performing the POWER ADJUST procedure presented in the following text.

If remote control operation is desired, operate the REMOTE DISABLE switch/indicator to extinguish the switch/indicator. This will enable both local and remote operation. If re mote control operation is to be disabled, operate the REMOTE DISABLE switch/indicator to illuminate the switch/indicator.

3.2.2 TURN–OFF.

Operate the transmitter to off by depressing the POWER CONTROL OFF switch/indicator. The POWER CONTROL OFF switch/indicator will illuminate. The transmitter RF output will be disabled.

Operate the AC ON/OFF switch to OFF to remove AC power from the transmitter.

3.2.3 MULTIMETER OPERATION.

The MULTIMETER is designed to display the status of several transmitter device operating parameters. To operate the multimeter, perform the following procedures.

1. The device is selected using the: 1) MODULE MODE switch/indicator or 2) the MODULE MODE switch/indicator and the MULTIMETER rotary select control. Select the transmitter device such as a module or the exciter as follows:

    a. To select a device using the MODULE MODE switch/indicator, proceed as follows:

        1. Depress the MODULE MODE switch/indicator to illuminate the switch/Indicator. A device will appear on the MULTIMETER display.

        2. The displayed device changes each time the MODULE MODE switch/indicator is depressed. To locate a specific device, depress the MODULE MODE switch/indicator as required to locate the desired device. The following text presents the device sequence.

            1. Module 1 through 16

            2. IPA

            3. Exciter

            4. Temperature

            5. Low-pass filter 1

            6. Low-pass filter 2

            7. Power supply 1 through 5

    b. To select a device using the MODULE MODE switch/indicator and the MULTIMETER rotary select control, proceed as follows:

        1. Depress the MODULE MODE switch/indicator to illuminate the switch indicator. A device will appear on the MULTIMETER display.

        2. Observe the MULTIMETER display and operate the MULTIMETER rotary select control clockwise to move forward in the device sequence. Observe the MULTIMETER display and operate the MULTIMETER rotary select control counterclockwise to move backward in the device sequence.

2. Once a device is selected, a device operating parameter can be viewed. This is accomplished using the: 1) FUNCTION MODE switch/indicator or 2) the FUNCTION MODE switch/indicator and the MULTIMETER rotary select control. Select the operating parameter such as the forward power of a module as follows:

a. To select a device using the FUNCTION MODE switch/indicator, proceed as follows:

1. Depress the FUNCTION MODE switch/indicator to illuminate the switch indicator. A device operating parameter will appear on the MULTIMETER display.

2. The operating changes each time the FUNCTION MODE switch/indicator is depressed. To locate a specific operating parameter for a device, depress the FUNCTION MODE switch/indicator as required to locate the desired operating parameter. The following text presents the operating parameter sequence.

    1. Module -

        Forward Power - (Wait approximately 10 seconds for a stable indication)

        Reflected Power

        Current

        Temperature in °C

    2. IPA -

        Forward Power - (Wait approximately 10 seconds for a stable indication)

        Reflected Power

        Current

        Temperature in °C

    3. Exciter -

        Forward Power

        Reflected Power

    4. Temperature in °C

        Right reject load (IPA Splitter)

        Left reject load (IPA Splitter)

        Inlet

    5. Low-pass filter 1 -

        Forward power

    6. Low-pass filter 2 -

        Forward power

7. Power supply 1 through 5 -

Operating status - OK or FAULT

To select a device operating parameter using the FUNCTION MODE switch/indicator and the MULTIMETER rotary select control, proceed as follows:

Depress the FUNCTION MODE switch/indicator to illuminate the switch indicator. A device operating parameter will appear on the MULTIMETER display.

Observe the MULTIMETER display and operate the MULTIMETER rotary select control clockwise to move forward in the device operating parameter sequence. Observe the MULTIMETER display and operate the MULTIMETER rotary select control counterclockwise to move backward in the device operating parameter sequence.

3.2.4 SYSTEM LCD OPERATION.

The SYSTEM LCD is used to display forward power, reflected power, PA current, and PA voltage. To select and present information on the SYSTEM LCD, proceed as follows:

To display system forward power, depress the FWD POWER switch/indicator to illuminate the switch/indicator. The power is displayed in kilowatts.

To display system reflected power, depress the RFL POWER switch/indicator to illuminate the switch/indicator. Reflected power can be displayed in reflected power or VSWR as determined by header J13 on the supervisor circuit board (refer to SECTION II, INSTALLATION - VSWR/REFLECTED POWER DISPLAY PROGRAMMING). When the unit is programmed for reflected power, the power is displayed in watts. Depending on the antenna, a normal reflected power indication is 100 watts.

To display system PA current, depress the PA CURRENT switch/indicator to illuminate the switch/indicator. The current is displayed in amperes. Depending on the TPO, a typical current indication is 320 A with a transmitter configured for a 10 kW RF output level and an operating frequency of 98 MHz.

To display system PA voltage, depress the PA VOLTAGE switch/indicator to illuminate the switch/indicator. The voltage is displayed in volts. A typical system voltage indication is 41.5 volts with a transmitter configured for a 10 kW RF output level and an operating frequency of 98 MHz.

3.2.5 POWER ADJUST.

The output power is adjusted using the POWER CONTROL rotary control. To adjust the transmitter output power, proceed as follows:

Operate the POWER CONTROL rotary control clockwise to increase the transmitter output power. Observe the transmitter output power indications on the SYSTEM LCD.

Operate the POWER CONTROL rotary control counterclockwise to decrease the transmitter output power. Observe the transmitter output power indications on the SYSTEM LCD.

3.2.6 POWER CONTROL.

Power control on the FM-10S and FMi 703 transmitters are adjusted via the power control knob as described above. However, the implementation is very different between the two models.

Power control on the FM-10S is accomplished by varying the power supply voltage when the power

control knob on the front of the unit is turned. The PAV will rise when the knob is turned clockwise and lower when the knob is turned counter clockwise. The power output from the exciter, or drive, does not change during the power control process.

Power control on the FMi 703 is accomplished by varying the exciter power, or drive. The exciter forward power will rise when the knob is turned clockwise and lower when the knob is turned counter clockwise. The PAV on the transmitter does not change during the power control process and sets at -42.5V.

Since the power control is accomplished in the exciter there is an interface from the transmitter to the exciter that indicates when the knob is being turned and in what direction. The supervisor board sends a voltage that goes to the I/O board. On the I/O board this volt age is on J1-7 for the main exciter and J2-7 for the standby exciter. This voltage is connected to J3-24 on the exciter.

The lower command is typically 1.5V on this pin and the range for this command is 0.5V to 2.2V. When the voltage is in this range the exciter power will lower, thus lowering the transmitter power. The raise command is typically 4.5V on this pin and the range for this command is any voltage above 2.68. When the voltage is above 2.68V the exciter power will raise, thus raising the transmitter power. There are two hold regions where the exciter does nothing. These are voltages between 2.2V and 2.68V and any voltage below 0.5V. When the voltage is in the hold range the exciter power will remain stable.

The FMi 703 is designed for HD Radio operation which requires that the transistors be biased for Class AB operation rather than Class C. When the transistors are biased at the higher current point the drive requirements go down due to the fact that the gain of the devices goes up. Therefore, the drive requirements from the exciter are quite low and it is normal to see the exciter running between 1 and 5Watts. This is in contrast to the 25Watts when the transmitter is running in Class C mode (FM-10S).

3.2.7 EXCITER OPERATION.

For transmitters equipped with an FX-50, refer to the FX-50 instruction manual (597-1050) for a complete description of the FX-50 operating procedures. Perform the procedures to configure the FX-50 for the desired operation. For transmitters equipped with an FXi 60, refer to the FXi 60 instruction manual (597-0541) for a complete description of the FXi 60 operating procedures. Perform the procedures to configure the FXi 60 for the desired operation.

3.2.8 PRESET POWER.

The transmitter can be operated to a lower preset power level using the PRESET POWER switch/indicator. The preset power function is typically used when the transmitter is switched to a secondary antenna or during icing conditions. The preset power level is recorded in the factory test data sheet. To operate the transmitter to the preset power level, depress the PRESET POWER switch/indicator to illuminate the switch/indicator.

3.2.9 REMOTE DISABLE.

Transmitter remote operation can be disabled using the REMOTE DISABLE switch/indicator. To disable remote control operation, depress the REMOTE DISABLE switch/indicator to illuminate the switch/indicator. Local operation will remain enabled. To enable remote control operation, depress the REMOTE DISABLE switch/indicator to extinguish the switch/indicator. This will enable both local and remote operation.

3.2.10 STANDBY EXCITER OPERATION.

If the transmitter is equipped with a standby exciter, the exciter can be manually switched into the transmitter RF chain using the STANDBY EXCITER switch/indicator. To manually switch the standby exciter into the RF chain, depress the STANDBY EXCITER switch/indicator to illuminate the

switch/indicator. To switch the normal exciter into the RF chain, depress the STANDBY EXCITER switch/indicator to extinguish the switch/indicator.

If the transmitter is equipped with a standby exciter, the exciter can be manually switched into the transmitter RF chain using the STANDBY EXCITER switch/indicator. To manually switch the standby exciter into the RF chain, depress the STANDBY EXCITER switch/indicator to illuminate the switch/indicator. To switch the normal exciter into the RF chain, depress the STANDBY EXCITER switch/indicator to extinguish the switch/indicator.

3.2.11 STANDBY IPA OPERATION.

If the transmitter is equipped with standby IPAs, the standby IPA can be manually switched into the transmitter RF chain using the STANDBY IPA switch/indicators. To manually switch the standby IPA into the RF chain, depress the STANDBY IPA switch/indicator to illuminate the switch/indicator. To switch the normal IPA into the RF chain, depress the STANDBY IPA switch/indicator to extinguish the switch/indicator.

3.2.12 FAULT RESET AND FAULT INDICATORS.

The transmitter is equipped with 5 fault indicators. The VSWR indicator will illuminate if a 1.45: 1 or greater VSWR condition is present at the RF output. The MODULE indicator will illuminate if a fault occurs in one or more modules. The DRIVE indicator illuminates if the IPA output is below 250 watts. The POWER SUPPLY indicator illuminates if a fault occurs in one or more power supply modules. The AC POWER indicator illuminates if: 1) the AC power line is below 168 volts or above 255 volts or 2) a loss-of-phase condition has occurred. The indicator will illuminate when ac power is returned to the transmitter (refer to AC LINE INTERRUPT - HIGH/LOW AC LINE AND loss-OF-PHASE CONDITIONS in the following text).

If a fault occurs, the FAULTS RESET switch/indicator will illuminate. To reset a transmitter fault condition, depress the FAULTS RESET switch/indicator. If the fault condition is remedied, the FAULT RESET indicator will extinguish.

If the fault condition is not remedied, operate the ac switch/circuit breaker to off and locate the problem.

Once the fault condition is remedied, depress the FAULTS RESET switch/indicator. The indicator will extinguish.

3.2.13 AC LINE INTERRUPT – HIGH/LOW AC LINE AND LOSS–OF–PHASE CONDITIONS.

The transmitter is equipped with AC line monitor circuit boards. The circuit boards will de-energize the transmitter in the event: 1) the AC power line is below 168 volts or above 255 volts or 2) a loss-of-phase condition occurs. If one of these conditions occurs, AC power will be removed from the transmitter. As a result, the transmitter output power will be disabled and all transmitter indicators will be extinguished. The transmitter will automatically re-energize when the AC line is between 168 and 255 volts or the AC line phase is restored. High/low AC line voltage or loss-of-phase on any one or more phases of the AC input is indicated by illumination of RED PHASE 1, 2 or 3 LED on the lower front panel of each cabinet. Once the transmitter re-energizes, the FAULT AC POWER indicator and the FAULT RESET switch/indicator will illuminate to indicate an AC line fault condition.

3.2.14 FAILURE CONDITIONS.

The FM-10S/FMi 703 is designed with the ability to provide output power when power supply and RF amplifier modules fail. This “soft failure” operation allows the transmitter to remain on-the-air until

the transmitter can be de-energized for repair. In the event of an RF amplifier module failure, the module can be removed from the transmitter chassis with power energized.

A complete description of failure mode operation is presented in SECTION V, MAINTENANCE. Refer to FAILURE MODE OPERATION for a description of transmitter performance during failure modes.

4 THEORY OF OPERATION

4.1 INTRODUCTION.

This section presents the theory of operation for the Broadcast Electronics FM-10S/FMi 703 transmitter.

4.2 OVERALL WIRING.

Information on the Overall block diagram of the FM-10S/FMi 703 transmitter is presented in Figure 16. Refer to Figure 16 for information on overall FM-208/FMi 703 transmitter block diagram.

4.3 POWER SUPPLY OPERATION.

A block level illustration of the FM-10S/FMi 703 power supply is presented in Figure 17. Refer to Figure 17 for FM-10S/FMi 703 power supply information.

4.4 RF CIRCUIT OPERATION.

A diagram of the FM-10S/FMi 703 RF circuitry is presented in Figure 18 and Figure 19. Refer to Figure 18 and Figure 19 for FM-10S/FMi 703 RF circuitry information.

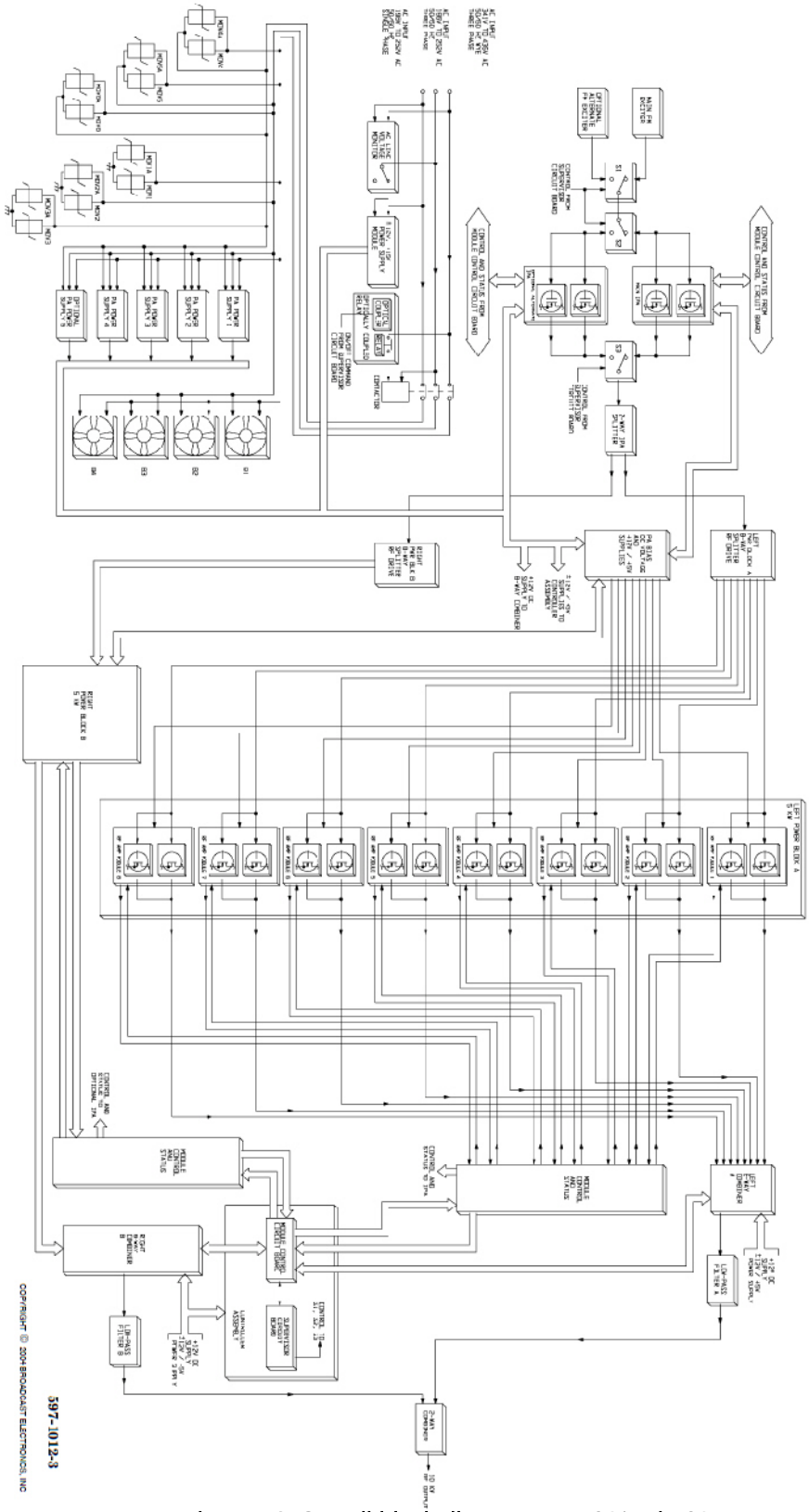

Figure 16. Overall block diagram FM-10S/FMi 703

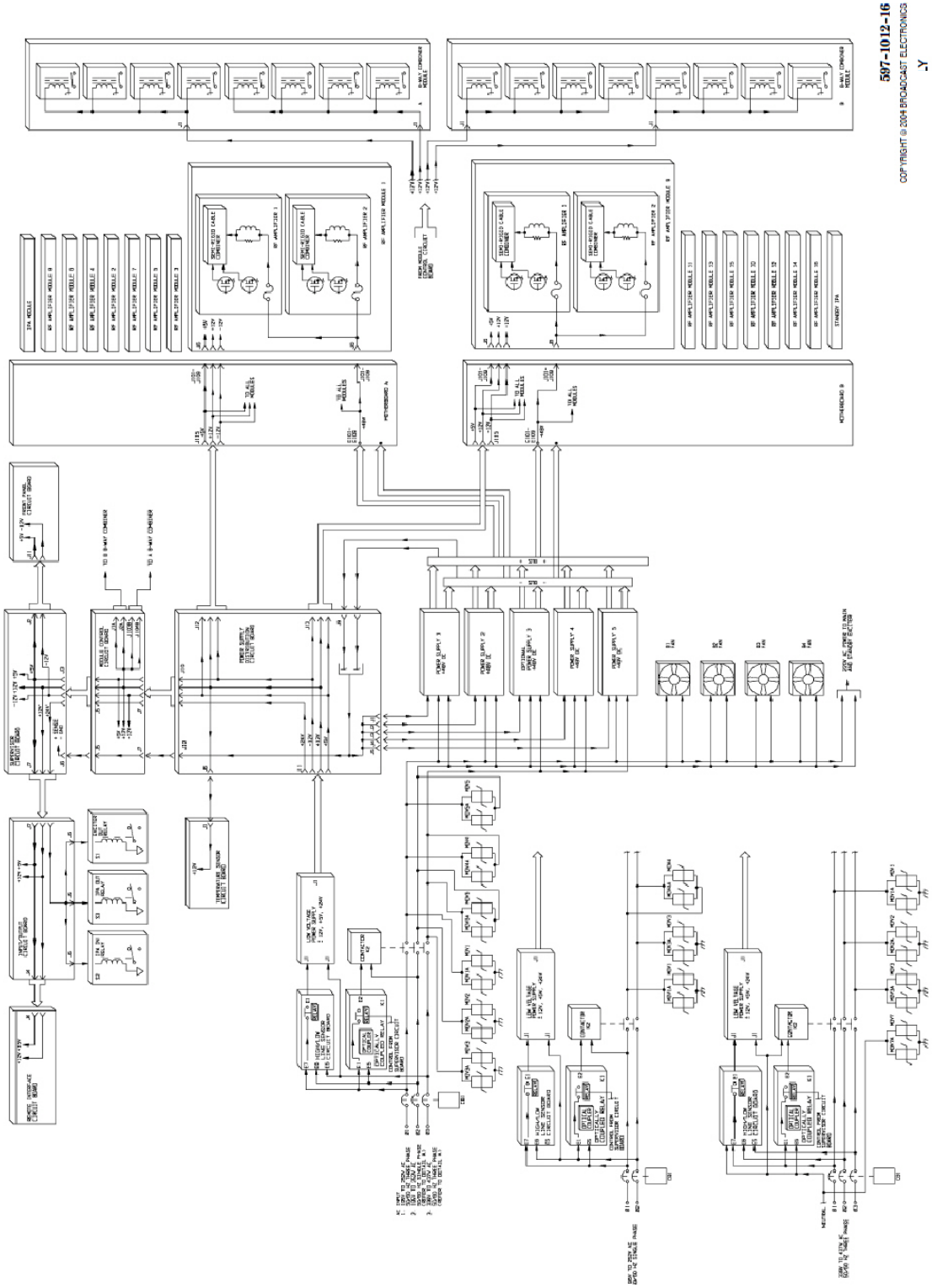

Figure 17. Power Supply Simplified Diagram.

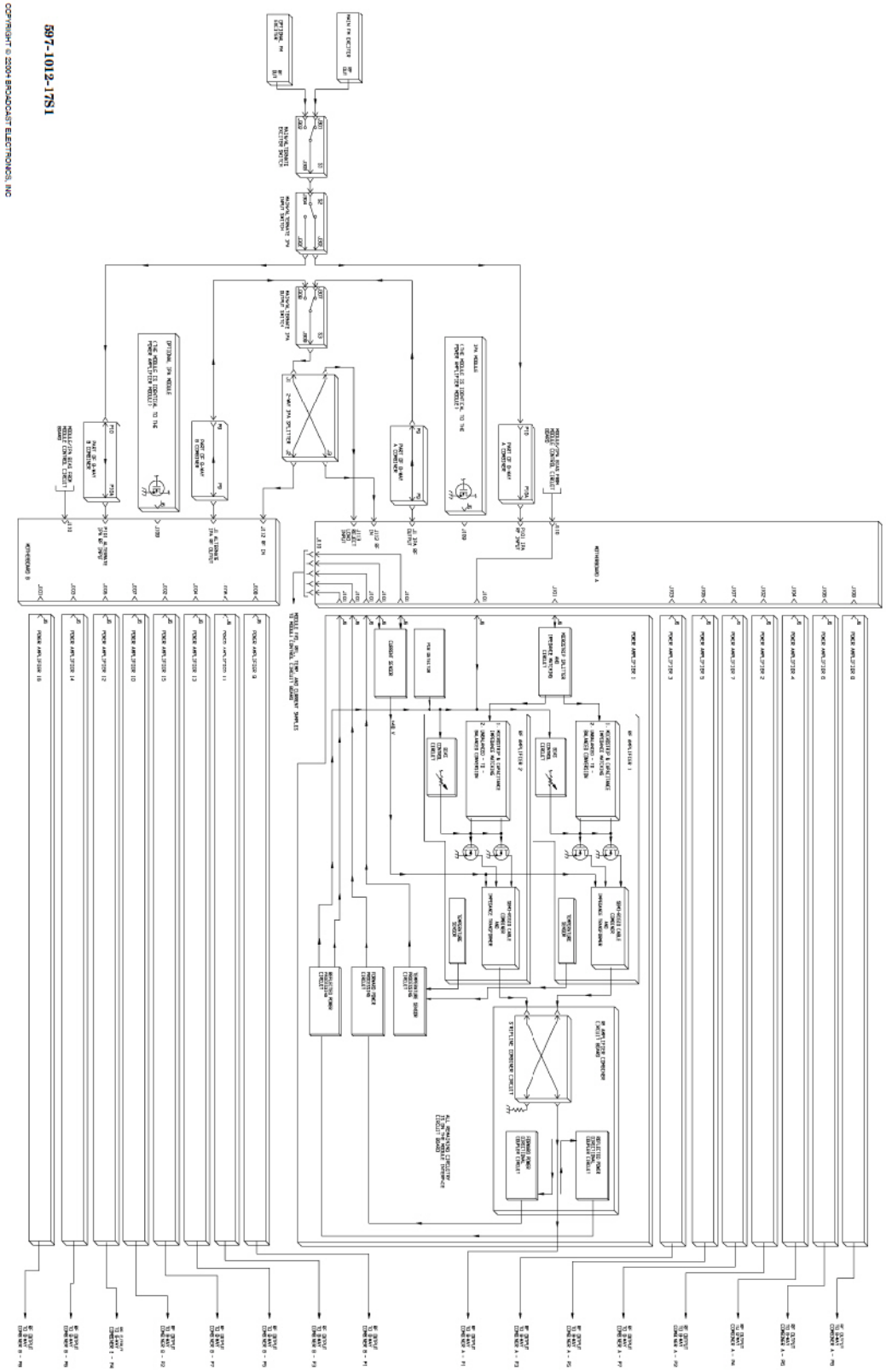

Figure 18. RF Simplified Schematic. 1 of2.

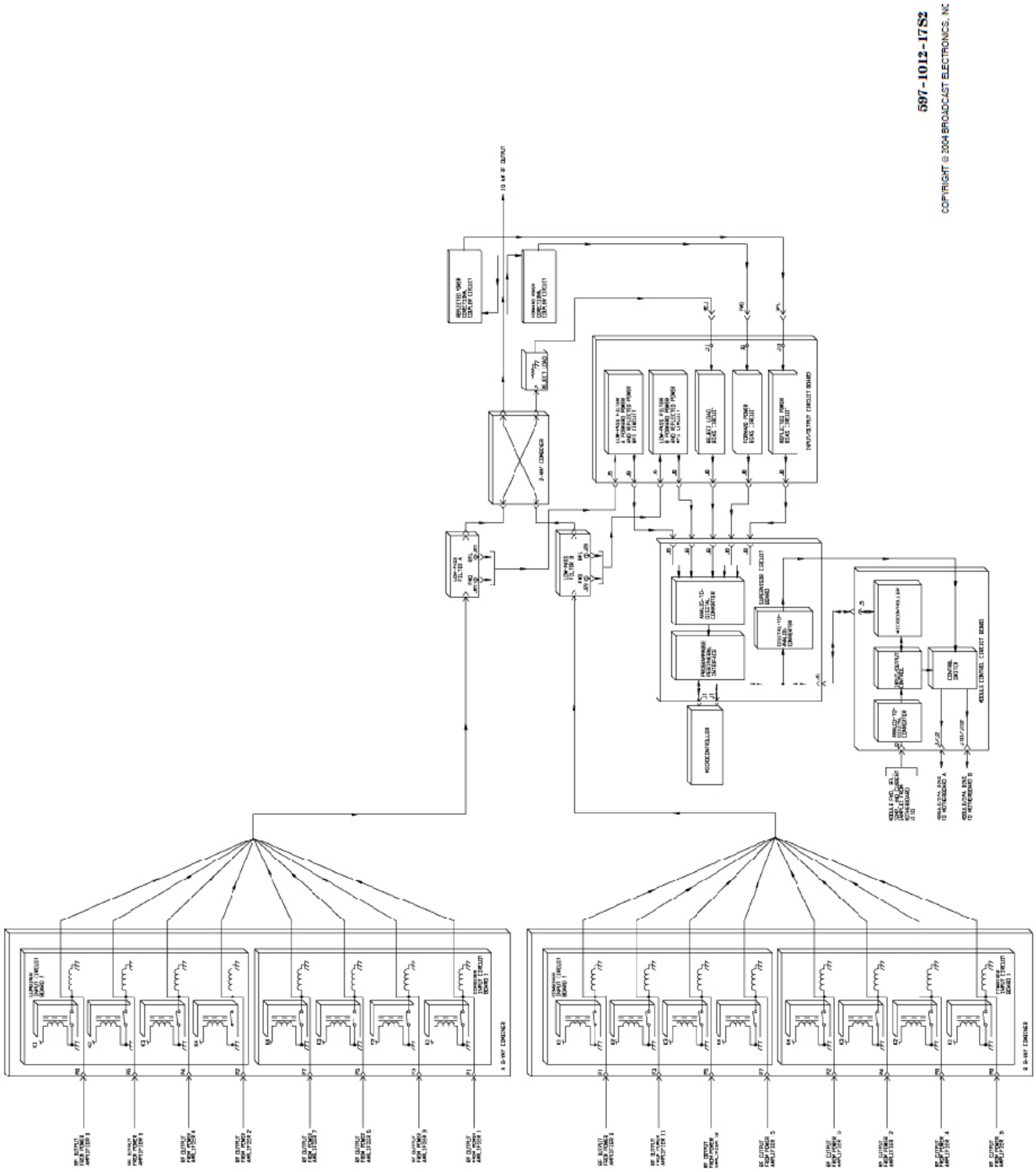

Figure 19. RF Simplified Schematic. 2 of 2.

5 SECTION V MAINTENANCE

5.1 INTRODUCTION.

This section provides maintenance information, electrical adjustment procedures, and troubleshooting information for the Broadcast Electronics FM-l0S/FMi 703 transmitter.

SAFETY CONSIDERATIONS.

WARNING NEVER OPEN THE EQUIPMENT UNLESS ALL TRANSMITTER PROMARY POWER IS DISCONNECTED. ENSURE ALL TRANSMITTER PROMARY POWER IS DISCONNECTED BEFORE ATTEMPTING MAINTENANCE ON ANY AREA WITHIN THE TRANSMTITER.

WARNING

The FM-l0S/FMi 703 transmitter contains high voltages and currents. If safety precautions are not practiced, contact with the high voltages and currents could cause serious injury or death. Never operate the transmitter unless all transmitter doors and access panels are installed. The transmitter is equipped with built-in safety features, however good judgment, care and common sense must be practiced to prevent accidents. The maintenance procedures contained in this section should be performed only by trained and experienced maintenance personnel.

It is dangerous to measure voltages inside the cabinet or replace components with power energized. Therefore, do not measure voltages inside the cabinet or replace components with power energized. Always operate the transmitter rear door AC switch/circuit breaker to OFF prior to performing any maintenance within the transmitter. Measurements with the power energized can be performed in the controller enclosure if required.

5.2 POWER AMPLIFIER EFFICIENCY.

The FM-l0S/FMi 703 power amplifier stage consists of solid-state power amplifier devices. Figure 20 and Figure 21, presents typical FM-l0S/FMi 703 PA stage efficiency values. The PA stage efficiency will vary slightly from the values presented due to component tolerances. Refer to Figure 20 and Figure 21, as required for typical PA stage efficiency values.

5.2.1 FIRST LEVEL MAINTENANCE.

First level maintenance consists of procedures applied to the equipment to prevent future failures. The procedures are performed on a regular basis and the results recorded in a maintenance log. Preventive maintenance of the transmitter consists of good housekeeping and checking performance levels using the meters and various indicators built into the equipment.

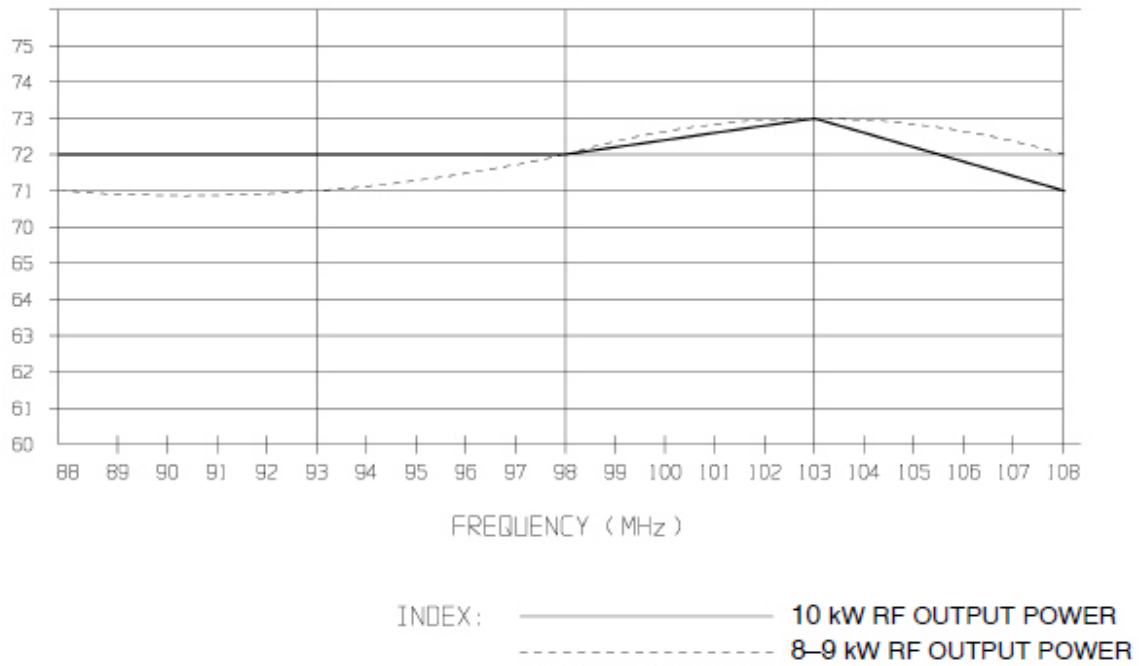

Figure 20. FM-10S Typical PA Efficiency.

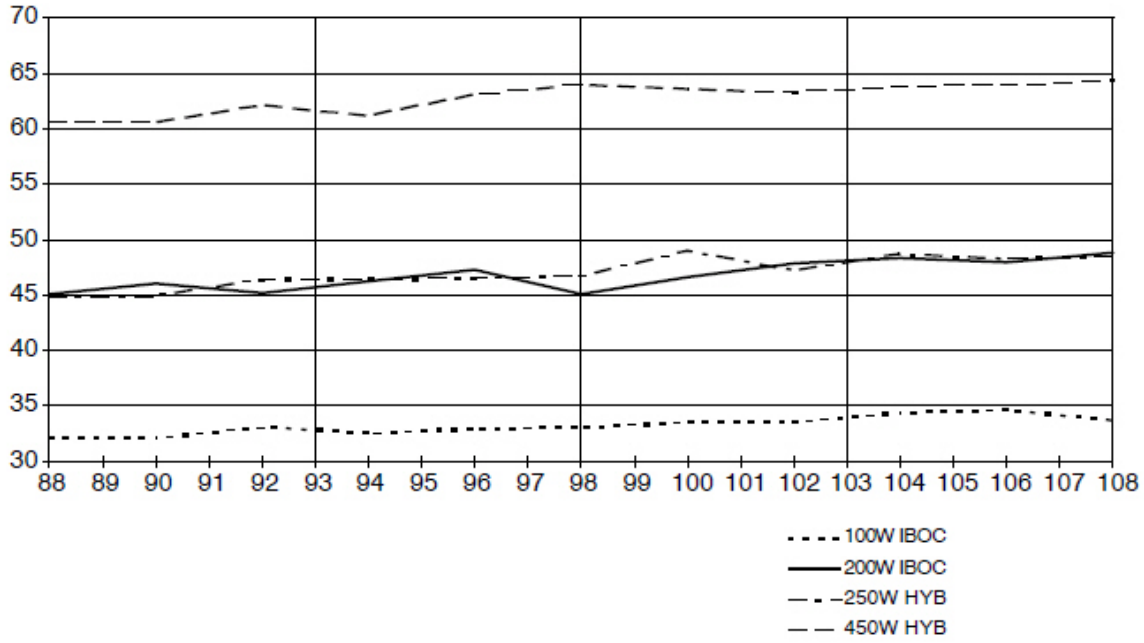

Figure 21. FMi 703 Typical PA Efficiency.

5.2.1 ROUTINE MAINTENANCE.

WARNING NEVER OPEN THE EQUIPMENT UNLESS ALL TRANSMITTER PROMARY POWER IS DISCONNECTED. ENSURE ALL TRANSMITTER PROMARY POWER IS DISCONNECTED BEFORE ATTEMPTING MAINTENANCE ON ANY AREA WITHIN THE TRANSMTITER.

WARNING

INSPECTION AND CLEANING. On a regular basis, clean the equipment of accumulated dust using a brush and vacuum cleaner. Inspect the RF amplifier modules and the power supplies for damage caused by component overheating. Overheated components are identified by circuit board discoloration near the component leads. Inspect the circuit boards for loose hardware as required.

TRANSMITTER AIR FILTERS. The FM-l0S/FMi 703 transmitter is equipped with four screen-type air filters refer to Figure 22,). The air filters are located on the rear-doors. Ensure the filters are installed with the air flow indicator pointing towards the flushing fans. The filters can be checked and cleaned without interrupting transmitter operation.

Check the filter approximately once a week. Proceed as follows:

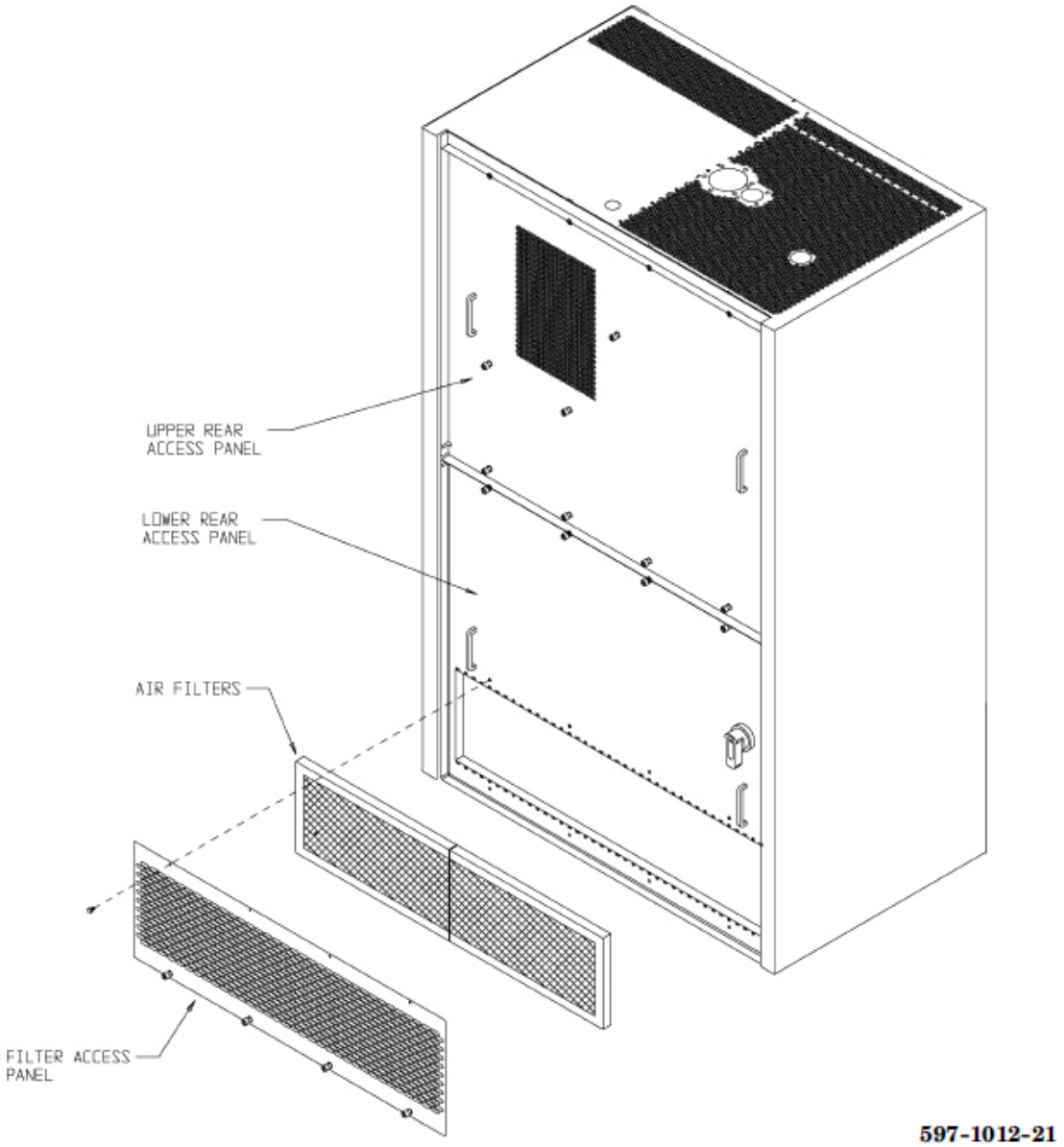

Figure 22. Air Filter Removal.

1. Refer to Figure 22 and remove the transmitter rear filter access panel.
2. Remove the filters from the chassis by lifting the filter from the chassis.
3. Clean the filter using a: 1) brush and vacuum or 2) brush and soapy water.
4. Replace the filter with the air flow indicator pointing towards the flushing fans.
5. Replace the rear filter access panel.

EXCITER AIR FILTER. The FX-50 and the optional FXi 60 exciter are also equipped with a screen-type air filter. The FX-50 and FXi 60 air filters can be checked and cleaned without interrupting transmitter operation.

The FXi 60 and FX-50 air filters can be accessed from the rear of the transmitter without interrupting transmitter operation. The FX-50 filter can also be accessed by sliding the unit out-of-the-rack. To access and clean the exciter filter, proceed as follows:

1. Refer to Figure 22 and remove the transmitter upper rear access panel.

2. Remove the filter from the chassis by removing the screws securing the filter to the chassis.

3. Clean the filter using a: 1) brush and vacuum or 2) brush and soapy water.

4. Replace the filter.

5. Replace the rear upper access panel.

FLUSHING FANS. Inspect the transmitter flushing fans for dust accumulation and periodically clean the fans using a brush and vacuum cleaner. The fans are cooled by air passing around each motor. If dust is allowed to accumulate on the motors, the ambient air temperature will increase due to restricted air flow. When the ambient air temperature increases, the fan motor bearing lubricant will gradually vaporize and bearing failure will occur.

It is recommended the flushing fan mounting hardware be periodically checked. The flushing fans are equipped with sealed bearings which do not permit lubrication. If a bearing fails, the motor must be replaced.

CONTROLLER BATTERY. The transmitter controller is equipped with a Lithium battery. The battery has a useful life of approximately 5 years. After approximately five years of service, replace the controller battery using BEI part number 350-2032.

5.2.2 SECOND LEVEL MAINTENANCE.

Second level maintenance consists of procedures required to adjust the transmitter circuitry or restore the transmitter to operation after a fault has occurred. The procedures consist of electrical adjustments, troubleshooting, and component replacement procedures. All electrical adjustments with the exception of the transmitter frequency re-programming procedure are required only when components are replaced in the transmitter circuitry.

WARNING NEVER OPEN THE EQUIPMENT UNLESS ALL TRANSMITTER PROMARY POWER IS DISCONNECTED. ENSURE ALL TRANSMITTER PROMARY POWER IS DISCONNECTED BEFORE ATTEMPTING MAINTENANCE ON ANY AREA WITHIN THE TRANSMTITER.

WARNING

The maintenance philosophy for the FM-l0S/FMi 703 transmitter consists of isolating a problem to a specific area. Once the specific area is located, subsequent troubleshooting using the information in the following text will assist in problem isolation to a replaceable assembly or component. If required, the replaceable assembly may be; 1) returned to the factory for repair or exchange or 2) repaired locally.

5.2.3 ELECTRICAL ADJUSTMENTS.

WARNING NEVER OPEN THE EQUIPMENT UNLESS ALL TRANSMITTER PROMARY POWER IS DISCONNECTED. ENSURE ALL TRANSMITTER PROMARY POWER IS DISCONNECTED BEFORE ATTEMPTING MAINTENANCE ON ANY AREA WITHIN THE TRANSMTITER.

WARNING

MULTIMETER CONTRAST ADJUSTMENT. Potentiometer R28 on the controller front panel circuit board adjusts the multimeter display contrast. The following text presents the procedure to adjust the multimeter contrast.

Required Equipment. The following equipment is required to adjust the multimeter display calibration control.

l. Insulated adjustment tool.

Procedure. To calibrate the multimeter display, proceed as follows:

Open the controller door.

Refer to Figure 23 and locate resistor R28.

Observe the MULTIMETER display and adjust R28 for the desired contrast.

Close the controller door.

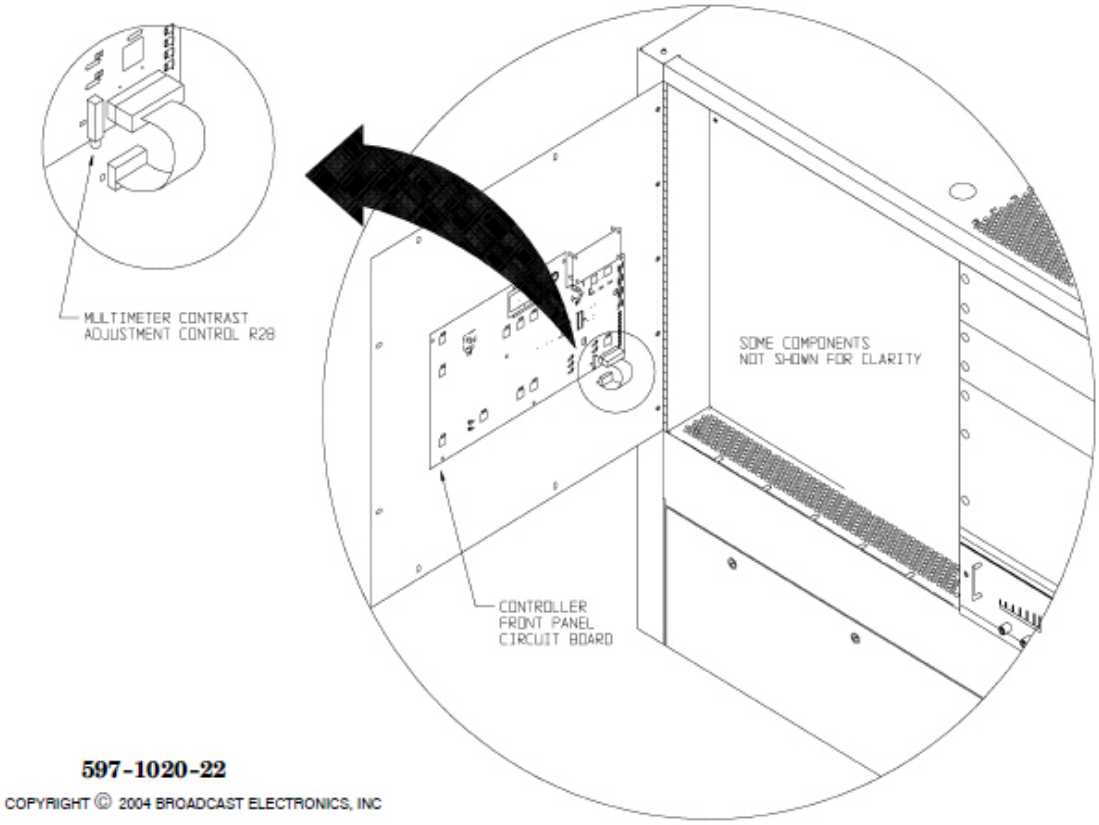

Figure 23. Controller Front Panel Circuit Board Controls

5.2.4 MICROPROCESSOR MODULE FIRMWARE UPGRADE.

CAUTION SOME OF THE PROCEDURES PERFORMED USING THE UTILITY PROGRAM CAN TEMPORARILY DISABLE THE TRANSMITTER. THEREFORE, CONTACT BROADCAST ELECTRONICS TECHNICAL SERVICES PRIOR TO PERFORMING ANY METER CALIBRATION OR FORMWARE UPLOAD.

CAUTION

CAUTION FOR MICROPROCESSOR FIRMWARE UPGRADES, THE TRANSMITTER METER VALUES MUST BE RECORDED PRIOR TO ATTEMPTING ANY UPGRADE PROCEDURE. DO NOT PERFORM FM-10S/FMi 703 UTILITY PROGRAM TASKS UNLESS SPECIFIED BY A PROCEUDRE.

CAUTION

GENERAL. The FM-l0S/FMi 703 controller is equipped with a modular microprocessor module (refer to Figure 24). The module is located on the supervisor circuit board and contains:1) the main transmitter operating code and 2) transmitter calibration values. For a microprocessor module firmware upgrade, the microprocessor module must be replaced. When this is required, the controller must be re-calibrated.

The re-calibration process is performed using the FM-l0S/FMi 703 utility program. The utility program allows the user to calibrate the multimeter display, calibrate the system LCD display, and change the firmware in the module control circuit board. The utility program requires Windows 95 HyperTerminal (or Windows Terminal), a null modem cable, and a PC to communicate with the operator.

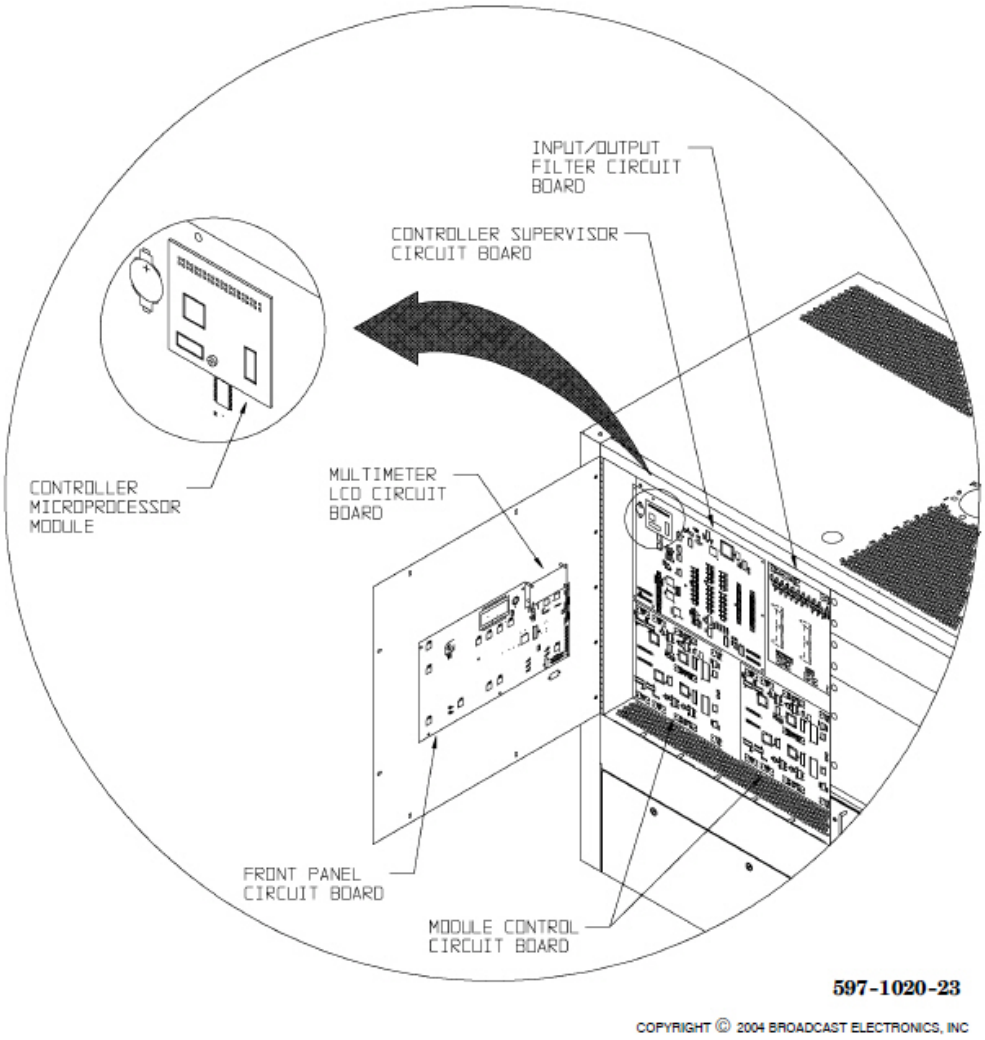

Figure 24. Controller Microprocessor Module.

The utility program allows the user to perform the following functions:1) set all meter calibrations to the factory defaults, 2) calibrate the multimeter parameters, 3) calibrate the system LCD display parameters, 4) upload firmware to the module control circuit board microprocessors, 5) adjust the module bias level, and 6) adjust the IPA bias level.

Some of the operations can be performed by the transmitter user. Some of the operations can only be performed by the user when instructed by Broadcast Electronics Technical Services. Some of the operations cannot be performed by the user. The following text presents the utility program operations.

Table 4. FM-10S UTILITY PROGRAM CODES

CODE	DESCRIPTION	COMMENTS
A	Dumps all TX parameters to the front panel serial port for viewing.	Allows access to all the information displayed on the multi-meter and LCD display on the front panel of the TX at one time.
B	Adjust the module full bias level.	Do not perform unless instructed to do so by the Broadcast Electronics RF Technical Services Dept.
C	Set TX to FM only mode.	Sets the TX to operate in FM only mode.
D	Set the drive power fault level.	Establishes the IPA RF drive level at which the DRIVE fault indicator will illuminate.
E	Enable/Disable reflected power readings from filters.	When pressed this feature toggles between enabling and disabling the reflected power readings from the filters.
F	Resets all meter calibration parameters to the factory defaults.	Can be used independently by the operator to reset all meter calibrations.
G	Set TX to IBOC only mode, no FM carrier.	Sets TX to IBOC only mode and is only valid if the TX is an FMi 703 or 1405.
H	Set TX to Hybrid mode, FM + IBOC.	Sets TX to FM + IBOC mode and is only valid if the TX is an FMi 703 or 1405.
I	Adjust the IPA full bias level.	Do not perform unless instructed to do so by the Broadcast Electronics RF Technical Services Dept.
K	Set the minimum exciter power reading for operation.	To be used by the operator only when instructed by the Broadcast Electronics RF Technical Services Dept.
L	Calibrates the LCD display.	Do not perform unless instructed to do so by the Broadcast Electronics RF Technical Services Dept.
M	Calibrates the multimeter display.	To be used by the operator only when instructed by the Broadcast Electronics RF Technical Services Dept.
O	Enable/Disable standby exciter option.	When pressed this feature toggles between enabling and disabling the standby exciter option.
Q	Terminates the utility program operations.	Used to terminate the utility program operation.
R	Establishes the reflected power level at which the automatic power foldback will occur.	To be used by the operator only when instructed by the Broadcast Electronics RF Technical Services Dept.
S	Enable/disable standby IPA option.	When pressed this feature toggles between enabling and disabling the standby IPA option.
U	Uploads new firmware to the module control circuit board microprocessors.	To be used by the operator only when instructed by the Broadcast Electronics RF Technical Services Dept.
V	Set the PA Supply Voltage when in IBOC only and FM + IBOC mode.	Do not perform unless instructed to do so by the Broadcast Electronics RF Technical Services Dept.
Q	Terminates the utility program operations.	Used to terminate the utility program operation.

FIRMWARE UPGRADE – PROCEDURE. When a firmware upgrade requires the supervisor circuit board to be replaced, the transmitter and module values must be recorded. To perform a microprocessor module firmware upgrade, proceed as follows:

Step 1 – Record The Transmitter And Module Values. Record the transmitter and module values by performing the following procedure. The re-calibration procedure requires a Bird wattmeter. Therefore, record the wattmeter values also.

Operate the transmitter at a normal output power.

Operate the MULTIMETER to record the following values for an RF amplifier module. Select only one module such as module I and record the values.

MODE/FUNCTION	TRANS. METER VALUE	BIRD WATTMETER VALUE
Module Forward Power		N/A
Module Reflected Power		N/A
Module Temp		N/A
Module Current		N/A
Combiner		N/A
Control PAV		N/A
Control PAI		N/A

Operate the SYSTEM LCD to record the following values.

MODE/FUNCTION	TRANS. METER VALUE	BIRD WATTMETER VALUE
System Forward Power		
System Reflected Power		
PA Voltage		N/A
System PA Current		N/A

Step 2 – Replace the Microprocessor Module. Replace the microprocessor module as follows:

WARNING DISCONNECT ALL TRANSMITTER PRIMARY POWER BEFORE PROCEEDING.

WARNING

Disconnect all transmitter primary power before proceeding.

Open the transmitter controller door and locate the microprocessor module (Figure 24).

Replace the microprocessor module as follows:

1. Using a #l Philips screwdriver, remove the microprocessor mounting screw.
2. Using your hands, gently pull the module from the header.
3. Orient the new microprocessor module as shown and insert the module in header J1 (Figure 24).
4. Re-install the mounting screw and close the controller door.

Step 3 – PC Connections. Once the microprocessor module is replaced, a PC must be connected to the transmitter. The utility program requires a PC and a null modem cable to communicate with the user. Refer to Figure 25 and connect a null modem cable between a computer COM port and the FM-10S/FMi 703 front-panel RTDS port as shown. If a pre-constructed null modem cable cannot be located, a cable can be manufactured using 2 female D-Type connectors and an s conductor cable (Figure 26).

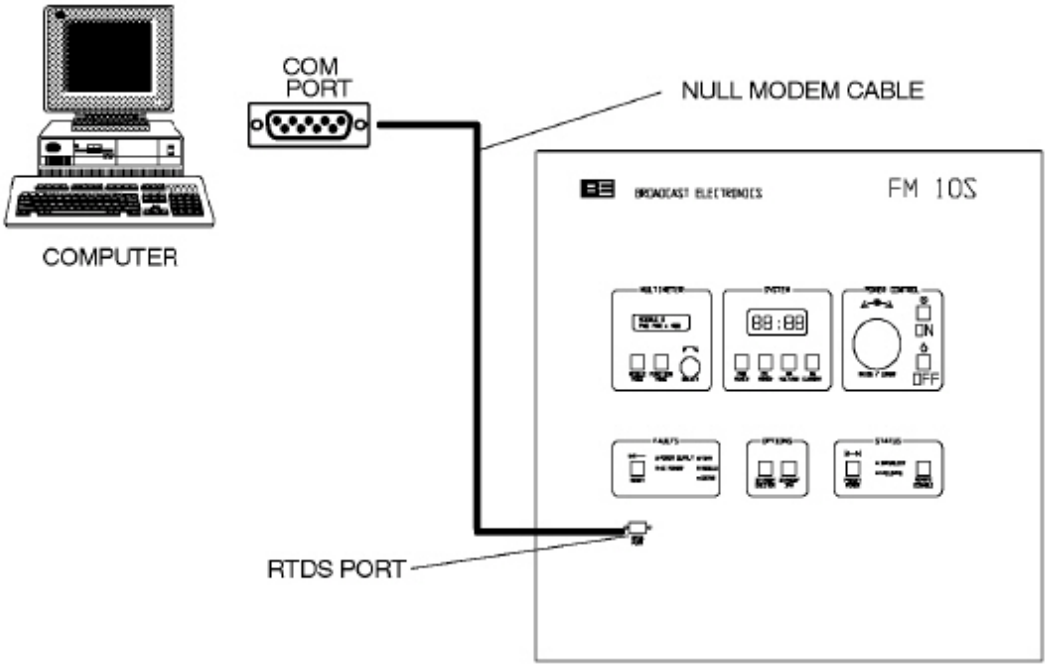

597-1012-23

Figure 25. PC CONNECTIONS - FM-10S UTILITY PROGRAM

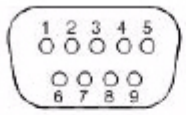

PIN	DESCRIPTION
1	DCD - Data Carrier Detect
2	RXD - Receive Data
3	TXD - Transmit Data Out
4	DTR - Data Terminal Ready
5	GND - Signal Ground
6	DSR - Data Set Ready
7	RTS - Request To Send
8	CTS – Clear To Send
9	No Connection

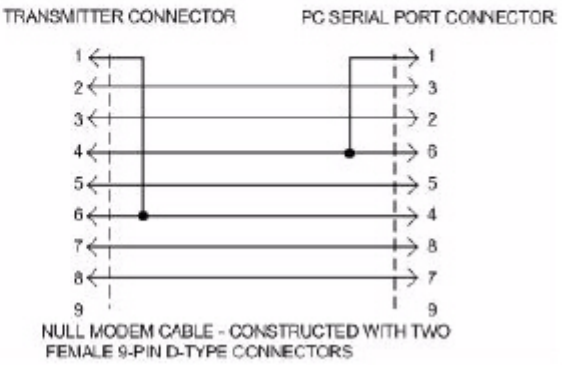

597-1012-32

Figure 26. NULL MODEM CABLE CONSTRUCTION

Step 4 – Utility Program Initial Operation. The utility program requires Windows 95/9s HyperTerminal or Windows Terminal. To establish a connection to the FM-10S/FMi 703 transmitter using the terminal program, proceed as follows:

1. Apply AC power and operate the transmitter.
2. Move the cursor to PROGRAMS→ ACCESSORIES→ HYPERTERMINAL and click the mouse.
3. Move the cursor to the HYPERTERMINAL shortcut and double-click the mouse. The HYPERTERMINAL program will appear.
4. Simultaneously depress the FM-10S/FMi 703 FORWARD POWER and PA CURRENT switch/indicators to illuminate the switch/indicators.

The FM-10S/FMi 703 utility program main display will appear (refer to Figure 27).

```
Setup menu, software version 1.0.25
A-All transmitter meter readings dumped to this port
B-Adjust the module full bias level
D-Set drive power fault level
E-Enable/disable reflected power readings from filters
F-Factory default values for meters calibration
C-Set transmitter in FM only mode
G-Set transmitter in IBOC only mode, no FM carrier
H-Set transmitter in hybrid FM plus IBOC mode
I-Adjust the IPA full bias level
K-Set the minimum exciter power reading for operation
L-Calibrate LCD meter parameter
M-Calibrate multimeter parameter
O-Enable/disable standby exciter option
R-Set reflected power reading that causes foldback
S-Enable/disable standby IPA option
U-Upload new software to module control processors
V-Set the PA supply voltage when in the IBOC mode
Q-Quit setup

Please type your selection now:                    597-1012-39

COPYRIGHT © 2004 BROADCAST ELECTRONICS, INC
```

Figure 27. UTILITY PROGRAM MAIN DISPLAY

Step 5 – System LCD Calibration. All the parameters displayed by the SYSTEM LCD are calibrated by the L command. The command calibrates the function selected on the transmitter SYSTEM LCD at the time of calibration. For example, if the SYSTEM LCD is configured to display FORWARD POWER, the value entered using the L command will calibrate the forward power. To re-calibrate the SYSTEM LCD, proceed as follows:

1. To calibrate the transmitter forward power, the transmitter output power must be adjusted to normal using an external wattmeter such as a Bird 472O Thruline with a 10 kW element. Connect the transmitter to the wattmeter and adjust the forward power as follows:

WARNING DISCONNECT ALL TRANSMITTER PRIMARY POWER BEFORE PROCEEDING.

WARNING

A. Disconnect all transmitter primary power before proceeding.

B. Connect the wattmeter to the transmitter.

C. Apply AC power to the transmitter.

D. Enable the transmitter and operate the POWER CONTROL rotary switch to adjust the output power until the forward power value recorded in Step 1 is present on the external wattmeter.

2. Calibrate the forward power as follows:

A. On the SYSTEM LCD, select FORWARD POWER.

B. Depress: L

The system calibration display will appear (refer to Figure 28).

```
Setup menu, software version 1.0.25
A-All transmitter meter readings dumped to this port
B-Adjust the module full bias level
D-Set drive power fault level
E-Enable/disable reflected power readings from filters
F-Factory default values for meters calibration
C-Set transmitter in FM only mode
G-Set transmitter in IBOC only mode, no FM carrier
H-Set transmitter in hybrid FM plus IBOC mode
I-Adjust the IPA full bias level
K-Set the minimum exciter power reading for operation
L-Calibrate LCD meter parameter
M-Calibrate multimeter parameter
O-Enable/disable standby exciter option
R-Set reflected power reading that causes foldback
S-Enable/disable standby IPA option
U-Upload new software to module control processors
V-Set the PA supply voltage when in the IBOC mode
Q-Quit setup
                                                    597-1012-40
Please type your selection now: L
Next, enter new reading, ignoring the decimal point:

COPYRIGHT © 2004 BROADCAST ELECTRONICS, INC
```

Figure 28. UTILITY PROGRAM SYSTEM CALIBRATION

C. Enter the forward power meter value recorded in Step 1. For example, to enter a forward power value of 10.1 kW, enter: 10.1.

D. Depress: Enter.

The forward power parameter will be calibrated.

Repeat the preceding forward power calibration step for reflected power and PA voltage. Enter the transmitter values recorded in Step 1.

Step 6 – Multimeter Calibration. All the parameters displayed by the MULTIMETER are calibrated by the M command. The command calibrates the function selected on the transmitter MULTIMETER LCD at the time of calibration. For example, if the MULTIMETER LCD is configured to display MODULE FORWARD POWER, the value entered using the M command will calibrate the module forward power. To re-calibrate the multimeter, proceed as follows:

1. Calibrate the module forward power as follows:

A. On the MULTIMETER LCD, select MODULE FORWARD POWER.

B. Depress: M

The multimeter calibration display will appear (refer to Figure 29).

```
Setup menu, software version 1.0.25
A-All transmitter meter readings dumped to this port
B-Adjust the module full bias level
D-Set drive power fault level
E-Enable/disable reflected power readings from filters
F-Factory default values for meters calibration
C-Set transmitter in FM only mode
G-Set transmitter in IBOC only mode, no FM carrier
H-Set transmitter in hybrid FM plus IBOC mode
I-Adjust the IPA full bias level
K-Set the minimum exciter power reading for operation
L-Calibrate LCD meter parameter
M-Calibrate multimeter parameter
O-Enable/disable standby exciter option
R-Set reflected power reading that causes foldback
S-Enable/disable standby IPA option
U-Upload new software to module control processors
V-Set the PA supply voltage when in the IBOC mode
Q-Quit setup                                          597-1012-41

Please type your selection now: M
Next, enter new reading, ignoring the decimal point:

                    COPYRIGHT © 2004 BROADCAST ELECTRONICS, INC
```

Figure 29. UTILITY PROGRAM MULTIMETER CALIBRATION

C. Enter the module forward power meter value recorded in Step 1. Typically, only module currents contain decimal points.

For example, to enter a current of 18.5 Amperes, enter: 18.5. To enter a forward power value of 570 watts, enter: 570.

D. Depress: Enter.

The module forward power parameter will be calibrated.

2. Repeat the procedure for module reflected power, module current, L combiner, and R combiner. Enter the transmitter values recorded in Step 1.

Step 7 – Quit Utility Program. Once the values are entered, the re-calibration process is complete. Exit the utility program as follows:

1. Depress: Q

The utility program will terminate operation.

5.2.5 SYSTEM LCD AND MULTIMETER RE–CALIBRATION.

CAUTION SOME OF THE PROCEDURES PERFORMED USING THE UTILITY PROGRAM CAN TEMPORARILY DISABLE THE TRANSMITTER. THEREFORE, CONTACT BROADCAST ELECTRONICS TECHNICAL SERVICES PRIOR TO PERFORMING ANY METER CALIBRATION OR FORMWARE UPLOAD.

CAUTION

GENERAL. The FM-10S/FMi 703 SYSTEM and MULTIMETER displays can be re-calibrated if required. The re-calibration is accomplished using the FM-10S/FMi 703 utility program. A complete description of the program is presented in MICROPROCESSOR MODULE FIRMWARE UPGRADE (refer to the preceding text).

SYSTEM LCD RE–CALIBRATION – PROCEDURE. The SYSTEM LCD re-calibration process is described in the MICROPROCESSOR MODULE FIRMWARE UPGRADE procedure in the preceding text. To re-calibrate a SYSTEM LCD meter parameter, proceed as follows:

Step 1 – PC Connections. To calibrate the SYSTEM meter, a PC must be connected to the transmitter. The utility program requires a PC and a null modem cable to communicate with the user. Refer to Figure 25, and connect a null modem cable between a computer COM port and the FM-10S/FMi 703 front-panel RTDS port as shown. If a pre-constructed null modem cable cannot be located, a cable can be manufactured using 2 female D-Type connectors and a 3 conductor cable (refer to Figure 26).

Step 2 – Utility Program Initial Operation. Refer to Step 4 - Utility Program Initial Operation in FIRMWARE UPGRADE - PROCEDURE (refer to the preceding text) to establish a connection to the FM-10S/FMi 703 transmitter using the terminal program.

Step 3 – System LCD Calibration. All the parameters displayed by the SYSTEM LCD are calibrated by the L command. Typically, only the forward power, reflected power, and the PA voltage require calibration. The command calibrates the function selected on the transmitter SYSTEM LCD at the time of calibration. For example, if the SYSTEM LCD is configured to display FORWARD POWER, the value entered using the L command will calibrate the forward power. To re-calibrate the SYSTEM LCD, refer to Step 5 – System LCD Calibration in FIRMWARE UPGRADE - PROCEDURE (refer to the preceding text) to calibrate the SYSTEM LCD.

Step 4 – Quit Utility Program. Once the values are entered, the re-calibration process is complete. Exit the utility program as follows:

1. Depress: Q

The utility program will terminate operation.

MULTIMETER RE–CALIBRATION – PROCEDURE. The MULTIMETER re-calibration process is described in the MICROPROCESSOR MODULE FIRMWARE UPGRADE procedure in the preceding text. To re-calibrate a MULTIMETER parameter, proceed as follows:

Step 1 – PC Connections. To calibrate the MULTIMETER, a PC must be connected to the transmitter. The utility program requires a PC and a null modem cable to communicate with the user. Refer to Figure 25, and connect a null modem cable between a computer COM port and the FM-10S/FMi 703 front-panel RTDS port as shown. If a pre-constructed null modem cable cannot be located, a cable can be manufactured using 2 female D-Type connectors and a 3 conductor cable (refer to Figure 26).

Step 2 – Utility Program Initial Operation. Refer to Step 4 - Utility Program Initial Operation in FIRMWARE UPGRADE - PROCEDURE (refer to the preceding text) to establish a connection to the FM-10S transmitter using the terminal program.

Step 3 – Multimeter Calibration. All the parameters displayed by the MULTIMETER are calibrated by the M command. The command calibrates the function selected on the transmitter MULTIMETER at the time of calibration. For example, if the MULTIMETER is configured to display MODULE FORWARD POWER, the value entered using the M command will calibrate the module forward power. To re-calibrate the MULTIMETER, refer to Step 6 - Multimeter Calibration in FIRMWARE UPGRADE - PROCEDURE (refer to the preceding text) to calibrate the MULTIMETER.

Step 4 – Quit Utility Program. Once the values are entered, the re-calibration process is complete. Exit the utility program as follows:

1. Depress: Q

The utility program will terminate operation.

5.2.6 SYSTEM LCD AND MULTIMETER RESET.

CAUTION

SOME OF THE PROCEDURES PERFORMED USING THE UTILITY PROGRAM CAN TEMPORARILY DISABLE THE TRANSMITTER. THEREFORE, CONTACT BROADCAST ELECTRONICS TECHNICAL SERVICES PRIOR TO PERFORMING ANY METER CALIBRATION OR FORMWARE UPLOAD.

CAUTION

GENERAL. In the event the meter calibrations become inadvertently mis-calibrated, the F command can be used to reset all calibration parameters to the factory defaults. The factory defaults are the values prior to the factory test setup. As a result, each system LCD or multimeter parameter must be re-entered. The values for the parameters can be located in the factory test data sheets. The SYSTEM LCD parameters include:1) forward power, 2) reflected power, and 3) PA voltage. The MULTIMETER parameters include: 1) module forward power, 2) module reflected power, 3) module current, and 4) module temperature. The command can be used during on-air operation. The reset is accomplished using the FM-

10S/FMi 703 utility program. A complete description of the program is presented in MICROPROCESSOR MODULE FIRMWARE UPGRADE (refer to the preceding text).

SYSTEM LCD AND MULTIMETER RESET – PROCEDURE. To reset the SYSTEM LCD and MULTIMETER parameters, proceed as follows:

Step 1 – PC Connections. To reset the SYSTEM LCD and MULTIMETER, a PC must be connected to the transmitter. The utility program requires a PC and a null modem cable to communicate with the user. Refer to Figure 25, and connect a null modem cable between a computer COM port and the FM-10S/FMi 703 front-panel RTDS port as shown. If a pre-constructed null modem cable cannot be located, a cable can be manufactured using 2 female D-Type connectors and a 3 conductor cable (refer to Figure 26).

Step 2 – Utility Program Initial Operation. Refer to Step 4 - Utility Program Initial Operation in FIRMWARE UPGRADE – PROCEDURE (refer to the preceding text) to establish a connection to the FM-10S/FMi 703 transmitter using the terminal program.

Step 3 – Reset and Quit. To reset all the meter calibrations, proceed as follows:

1. Depress: F

All meter calibration parameters will be reset to the factory defaults.

2. Depress: Q

The utility program will terminate operation.

Step 4 – Re–Enter the System LCD and Mulitmeter Values. Refer to SYSTEM LCD AND MULTIMETER RE-CALIBRATION in the preceding text and perform the procedure to re-enter the meter parameter values.

5.2.7 REFLECTED POWER FOLDBACK CALIBRATION.

CAUTION

SOME OF THE PROCEDURES PERFORMED USING THE UTILITY PROGRAM CAN TEMPORARILY DISABLE THE TRANSMITTER. THEREFORE, CONTACT BROADCAST ELECTRONICS TECHNICAL SERVICES PRIOR TO PERFORMING ANY METER CALIBRATION OR FORMWARE UPLOAD.

CAUTION

GENERAL. The FM-10S/FMi 703 utility program R command establishes the reflected power level when the transmitter will begin automatic foldback operation. The factory default is 6OO watts. The command: 1) is to be used only when instructed by Broadcast Electronics Technical Services and 2) can be executed during on-air operation. A complete description of the program is presented in MICROPROCESSOR MODULE FIRMWARE UPGRADES (refer to the preceding text).

REFLECTED POWER FOLDBACK CALIBRATION – PROCEDURE. To establish the level when the transmitter will begin automatic foldback operation, proceed as follows:

Step 1 – PC Connections. To calibrate the reflected power foldback level, a PC must be connected to the transmitter. The utility program requires a PC and a null modem cable to communicate with the user. Refer to Figure 25, and connect a null modem cable between a computer COM port and the FM-10S/FMi 703 front-panel RTDS port as shown. If a pre-constructed null modem cable cannot be located, a cable can be manufactured using 2 female D-Type connectors and a 3 conductor cable (refer to Figure 26).

Step 2 – Utility Program Initial Operation. Refer to Step 4 - Utility Program Initial Operation in the FIRMWARE UPGRADE - PROCEDURE (refer to the preceding text) to establish a connection to the FM-10S/FMi 703 transmitter using the terminal program.

Step 3 – Calibrate And Quit. To calibrate the reflected power foldback level, proceed as follows:

1. Select the reflected power level when the transmitter is to begin automatic foldback operation.

2. Depress: R

The reflected power foldback level display will appear.

3. Enter the reflected power value as directed by Broadcast Electronics Technical Services. Enter the values without the decimal point. For example, to enter a reflected power value of 500 watts, enter: 500.

4. Depress: Enter.

The reflected power value will be saved.

```
Setup menu, software version 1.0.25
A-All transmitter meter readings dumped to this port
B-Adjust the module full bias level
D-Set drive power fault level
E-Enable/disable reflected power readings from filters
F-Factory default values for meters calibration
C-Set transmitter in FM only mode
G-Set transmitter in IBOC only mode, no FM carrier
H-Set transmitter in hybrid FM plus IBOC mode
I-Adjust the IPA full bias level
K-Set the minimum exciter power reading for operation
L-Calibrate LCD meter parameter
M-Calibrate multimeter parameter
O-Enable/disable standby exciter option
R-Set reflected power reading that causes foldback
S-Enable/disable standby IPA option
U-Upload new software to module control processors
V-Set the PA supply voltage when in the IBOC mode
Q-Quit setup

Please type your selection now: R
Old value is:  500                                  597-1012-41
Enter a new value:

                                   COPYRIGHT © 2004 BROADCAST ELECTRONICS, INC
```

Figure 30. UTILITY PROGRAM MULTIMETER CALIBRATION

5. Depress: Q

The utility program will terminate operation.

5.2.8 UPLOADING FIRMWARE TO THE MODULE CONTROL CIRCUIT BOARDS.

CAUTION SOME OF THE PROCEDURES PERFORMED USING THE UTILITY PROGRAM CAN TEMPORARILY DISABLE THE TRANSMITTER. THEREFORE, CONTACT BROADCAST ELECTRONICS TECHNICAL SERVICES PRIOR TO PERFORMING ANY METER CALIBRATION OR FORMWARE UPLOAD.

CAUTION

GENERAL. The FM-10S utility program U command uploads new firmware to the module control microprocessors. The command: 1) is to be used only when instructed by Broadcast Electronics Technical Services and 2) can be executed only during a maintenance period (no on-air broadcast). The new firmware file MCF.BIN must be at the PC prior to beginning the upload procedure. The procedure immediately deletes the current firmware installed in the memory. When this occurs, the transmitter will not operate until the new file is installed. A

complete description of the program is presented in MICROPROCESSOR MODULE FIRMWARE UPGRADE (refer to the preceding text).

UPLOADING FIRMWARE TO THE MODULE CONTROL CIRCUIT BOARDS – PROCEDURE. To upload new code to the module control circuit boards, proceed as follows:

Step 1 – PC Connections. To upload firmware to the module control circuit boards, a PC must be connected to the transmitter. The utility program requires a PC and a null modem cable to communicate with the user. Refer to Figure 25 and connect a null modem cable between a computer COM port and the FM-10S front-panel RTDS port as shown. If a pre-constructed null modem cable cannot be located, a cable can be manufactured using 2 female D-Type connectors and a 3 conductor cable (refer to Figure 26).

Step 2 – Utility Program Initial Operation. Refer to Step 4 - Utility Program Initial Operation in FIRMWARE UPGRADE - PROCEDURE (refer to the preceding text) to establish a connection to the FM-10S transmitter using the terminal program.

Step 3 – Upload Firmware to the Module Control Circuit Boards and Quit. To upload firmware to the module control microprocessors, proceed as follows:

CAUTION

THE TRANSMITTER MUST BE REMOVED FROM ON-AIR OPERATION PRIOR TO PERFORMING THE UPLOAD PROCEDURE.
THE NEW MCF.BIN FIRMWARE FILE MUST BE AT THE PC PRIOR TO BEGINING THE UPLOAD PROCEDURE. THE PROCEDURE IMMEDIATELY DELETES THE FIRMWARE INSTALLED IN THE MEMORY.

CAUTION

1. Locate the new MCF.BIN firmware file to be installed.

2. Depress: U

The upload display will appear (refer to Figure 31).

```
Setup menu, software version 1.0.25
A-All transmitter meter readings dumped to this port
B-Adjust the module full bias level
D-Set drive power fault level
E-Enable/disable reflected power readings from filters
F-Factory default values for meters calibration
C-Set transmitter in FM only mode
G-Set transmitter in IBOC only mode, no FM carrier
H-Set transmitter in hybrid FM plus IBOC mode
I-Adjust the IPA full bias level
K-Set the minimum exciter power reading for operation
L-Calibrate LCD meter parameter
M-Calibrate multimeter parameter
O-Enable/disable standby exciter option
R-Set reflected power reading that causes foldback
S-Enable/disable standby IPA option
U-Upload new software to module control processors
V-Set the PA supply voltage when in the IBOC mode
Q-Quit setup                                          597-1012-41

Please type your selection now: Upload will erase the software
on the module control card.  Are you sure this is what you want to do?
Enter Y or N to respond . .

                                   COPYRIGHT © 2004 BROADCAST ELECTRONICS, INC
```

Figure 31. UTILITY PROGRAM MULTIMETER CALIBRATION

3. Move the cursor to TRANSFERS→SEND BINARY FILE and click the mouse.

4. Use the BROWSE dialog box to select the MCF.BIN file.

5. Move the cursor to OK and click the mouse.

The download process will begin.

6. Refer to Figure 31 depress the supervisor circuit board microprocessor reset switch.

7. Depress: Q

The utility program will terminate operation.

5.2.9 RF POWER AMPLIFIER MODULE ADJUSTMENTS.

The RF power amplifier module amplifier and interface circuit boards contain calibration controls. The power amplifier circuit board is equipped with bias level control R109 and matching control C116. The interface circuit board is equipped with forward calibration control R1, reflected power calibration control R2, current offset adjust control R26, current calibration control R27, amplifier A input match control C29, and amplifier B input match control C23. Due to the critical nature and specialized test equipment required to adjust the controls, the controls are not considered field adjustable. If the controls are to be adjusted, contact Broadcast Electronics Technical Services.

5.2.10 LOW–PASS FILTER ADJUSTMENTS.

The low-pass filter is equipped with a reflected power null control. Due to the critical nature and specialized test equipment required to adjust the control, the control is not considered field adjustable. If the control is to be adjusted, contact the Broadcast Electronics Technical Services.

5.2.11 TRANSMITTER FREQUENCY RE–PROGRAMMING.

The FM-10S/FMi 703 transmitter is configured for a specific frequency when shipped from the factory. However, the transmitter can be re-programmed for a different frequency in the field if required. The following text presents the procedure to change the transmitter operating frequency.

Required Equipment. The following equipment is required to re-program the transmitter operating frequency.

l. Calibrated in-line wattmeter with 10kW element (Bird 4720 or equivalent).

2. Test load and cable (50 Ohm Non-Inductive, 3 1/8' connector).

Procedure. To re-program the transmitter operating frequency, proceed as follows:

WARNING DISCONNECT ALL TRANSMITTER PRIMARY POWER BEFORE PROCEEDING.

WARNING

Connect the test load and wattmeter to the transmitter output.

For an FX-50 exciter, refer to SECTION 4, AFC/PLL ASSEMBLY in FX-50 publication 597-l050 and perform the FREQUENCY SELECTION procedure. For an FXi 60, refer to publication 597-054l and follow the GUI interface for changing the frequency. Operate and test the exciter independently from the transmitter.

Energize the transmitter primary AC power and operate the transmitter at the desired output power level as indicated by the in-line wattmeter.

If a difference in values presented on the in-line wattmeter and the transmitter multimeter is observed, the transmitter forward power display may be re-calibrated. To re-calibrate the forward power meter, refer to METER CALIBRATION/FIRMWARE

UPLOADING in the preceding text and perform the System LCD Calibration procedure. Perform the procedure to calibrate the system FWD POWER parameter. Ensure the in-line wattmeter has been recently calibrated at the factory prior to calibrating the transmitter multimeter display.

WARNING DISCONNECT ALL TRANSMITTER PRIMARY POWER BEFORE PROCEEDING.

WARNING

Disconnect all transmitter primary power.

Remove the test equipment and reconnect the transmitter output to the antenna.

5.2.12 TROUBLESHOOTING.

TYPICAL METER INDICATIONS. Typical meter indications for the FM-10S/FMi 703 transmitter are presented in the factory final test data sheets shipped with each transmitter. Some typical meter indications are presented in TABLE 5. For specific meter indications, refer to the factory test data sheets (located in the final text data sheet envelope).

Table 5. FM-10S TYPICAL METER INDICATIONS – 98.1MHZ

RF PWR	PWR SUP V	PWR SUP I	REJ PWR	FILT 1 RFL	FILT 2 RFL	REJ TEMP	INLET TEMP	AC V	AC I
10kW	40.0	322	7	5.3	5.3	31	33	212	39

MOD	FWD	RFL	I	TEMP					
1	569	1	19.9	53					
2	595	1	20.6	47					
3	579	1	20.3	54					
4	576	0	20.3	47					
5	562	1	20.6	54					
6	573	1	20.6	49					
7	570	1	20.2	51					
8	573	1	20.0	48					
9	554	0	19.1	54					
10	568	0	20.6	48					
11	565	0	20.1	54					
12	595	0	20.6	48					
13	557	0	19.4	55					
14	577	0	19.1	48					
15	538	0	19.3	55					
16	557	1	19.7	46					
IPA	558	1	19.8	47					

NOTE THE TRANSMITTER WILL NOT OPERATE WITH MORE THAN 4 RF POWER AMPLIFIER MODULES REMOVED FROM MODULE LOCATIONS 1 THROUGH 8 OR 9 THROUGH 16. ENSURE NO MORE THAN 4 RF POWER AMPLIFIER MODULES ARE REMOVED FROM MODULE LOCATIONS 1 THROUGH 8 OR 9 THROUGH 16.

NOTE

FAILURE MODE OPERATION The FM-10S/FMi 703 is designed with the ability to provide output power when power supply and RF amplifier modules fail. This “soft failure" operation allows the transmitter to remain on-the-air until the transmitter can be de-energized for repair. In the event of an RF amplifier module failure, the module can be removed from the transmitter chassis with power energized.

The output power provided during the failure mode is determined by the type and location of the failure. For example, if only one module fails, the transmitter output power will be 9.5 kW. If two modules fail on the same motherboard/combiner portion of the transmitter, the transmitter output power will output approximately 7.5 kW. Table 6 presents the failure combinations of RF power modules in each cabinet, the total number of failed modules and the typical transmitter output power.

Table 6. POWER OUTPUT WITH FAILED RF AMPLIFIER MODULES.

NUMBER FAILED MODULES		POWER OUTPUT kW
MTHRBD.A (LEFT)	MTHRBD.B (RIGHT)	
1	0	9.5
0	1	9.5
2	0	7.5
0	2	7.5
3	0	4
0	3	4
4	0	2.4
0	4	2.4
1	1	9
2	2	5.4
3	3	2.5
4	4	1.0
2	1	6
1	2	6
3	2	2.4
2	3	2.4
4	3	1.1
3	4	1.1

The transmitter will also output power if a power supply module fails. Table 7 presents the failure combinations of power supply modules in each cabinet, the total number of failed power supply modules and the typical transmitter output power.

Table 7. POWER OUTPUT WITH FAILED POWER SUPPLY MODULES.

NUMBER FAILED MODULES	POWER OUTPUT kW
1	6
2	3
3	500 WATTS

NOTE THE TRANSMITTER WILL NOT OPERATE WITH MORE THAN 4 RF POWER AMPLIFIER MODULES REMOVED FROM MODULE LOCATIONS 1 THROUGH 8 OR 9 THROUGH 16. ENSURE NO MORE THAN 4 RF POWER AMPLIFIER MODULES ARE REMOVED FROM MODULE LOCATIONS 1 THROUGH 8 OR 9 THROUGH 16.

NOTE

TRANSMITTER TROUBLESHOOTING PROCEDURES. Table 8 presents troubleshooting information for the FM-10S/FMi 703 transmitter. Refer to Table 8 to isolate the problem to a specific assembly. Once the trouble is isolated, refer to the theory of operation and schematic diagrams to assist in problem resolution.

Table 8. FM-10S/FMi 703 TROUBLESHOOTING.

SYMPTOM	CIRCUITRY TO CHECK
TRANSMITTER OFF WITH NO FRONT PANEL INDICATIONS	Ensure primary AC power is applied to the unit and ensure the ON/OFF/circuit breaker is operated to ON. If the primary AC power is on, the transmitter is in an AC interrupt condition. In this condition, the transmitter has detected: 1) the AC line is below 168 volts or above 255 volts or 2) a loss-of-phase. During an AC line interrupt condition, AC power is removed from the transmitter. The transmitter will automatically return to operation when the AC line is between 168 and 255 volts or the AC line phase is restored. When power is returned to the unit, the front panel FAULTS – AC LINE indicator and the FAULTS RESET switch/indicator will illuminate to indicate a fault condition. If the primary AC power is between 168 and 255 volts and all three phases are operational, check the controller power supply. The controller battery is missing or defective. Replace the battery. The controller MCF.BIN file has been erased. Contact the Broadcast Electronics RF Technical Services Department
NO OUPUT POWER FX-50 LOCK INDICATOR EXTINGUISHED OR FXi 60 FAULT INDICATOR ILLUMINATED	FX-50 – AFC is unlocked. FXi 60 – exciter fault. Refer to the exciter manual and troubleshoot the exciter.
NO OUPUT POWER STATUS FAIL-SAFE INDICATOR EXTINGUISHED	Check the equipment connected to the fail-safe interlock such as the test load, motorized coaxial switch, or remote control unit.
NORMAL OUPUT POWER FAULTS – AC POWER INDICATOR ILLUMINATED AND FAULTS – RESET SWITCH/INDICATOR ILLUMINATED	Indicates: 1) the AC power input is below 168 volts or above 255 volts or 2) a loss-of-phase condition has occurred. The transmitter will automatically re-energize when the AC input voltage is between 168 to 255 volts or the AC line phase is restored.
LOW OUTPUT POWER FAULTS – DRIVE INDICATOR ILLUMINATED AND FAULTS – RESET SWITCH/INDICATOR ILLUMINATED	Check the exciter forward power. The forward power must be 25 watts (30 watts maximum). If the exciter forward power is low, increase the exciter output power. If the exciter forward power is normal, ensure cable 301 is

	connected between the exciter RF output and the bulkhead connector on the bottom of the exciter enclosure.
LOW OUTPUT POWER FAULTS – MODULE INDICATOR ILLUMINATED AND FAULTS – RESET SWITCH/INDICATOR ILLUMINATED	An RF amplifier or IPA module has a fault. Locate the failed module using the transmitter MULTIMETER, MODULE MODE, and FUNCTION MODE controls. If the failed module is the result of a defective RF amplifier circuit board, refer to POWER AMPLIFER MODULE AND IPA MODULE RF AMPLIFIER CIRCUIT BOARD REPLACEMENT in the following text to replace the defective RF amplifier circuit board. The failed module can be removed from the chassis with the power energized if required.
LOW OUTPUT POWER FAULTS – VSWR INDICATOR ILLUMINATED AND FAULTS – RESET SWITCH/INDICATOR ILLUMINATED	A greater than 1.5:1 VSWR condition is present at the RF output. Check the antenna.
LOW OUTPUT POWER FAULTS – POWER SUPPLY INDICATOR ILLUMINATED	A power supply has a fault. Locate the failed power supply using the transmitter MULTIMETER, MODULE MODE, and FUNCTION MODE controls.
TRANSMITTER WILL NOT AUTOMATICALLY RETURN TO RATED POWER AFTER AN AC POWER LOSS	Replace the battery in the controller.
LOW OR NO OUTPUT POWER FAULTS - NONE	Ensure cable from J1-7 (or J2-7 for standby exciter) on I/O board is connected to J3 pin 24 on Exciter. Ensure cable is connected between LVDS to IBOC Data on FSi 10 and IBOC Data on FXi exciter. Check RF output from the exciter.

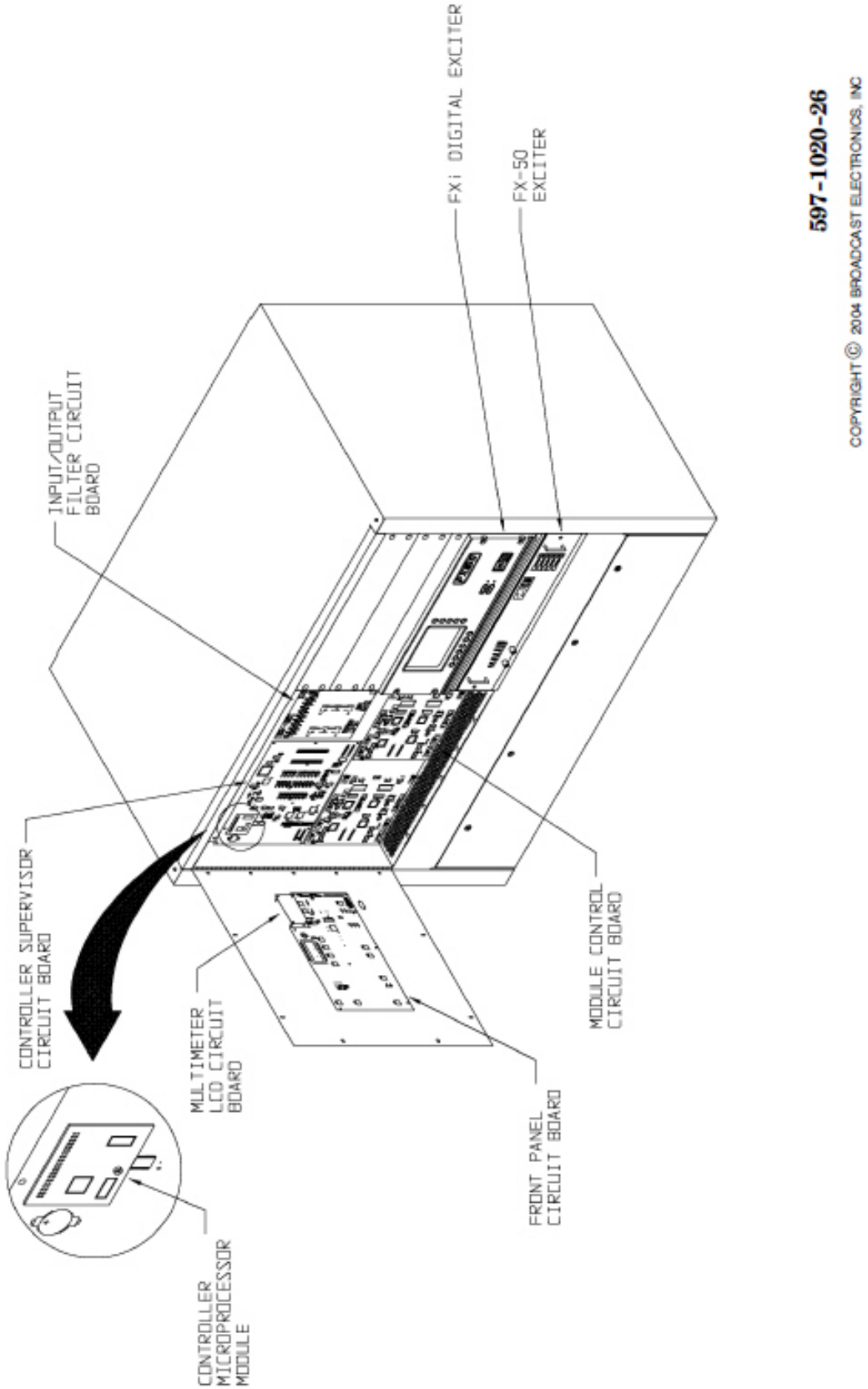

Figure 32. FM-10S/FMi 703 COMPONENT LOCATOR (1 OF 10).

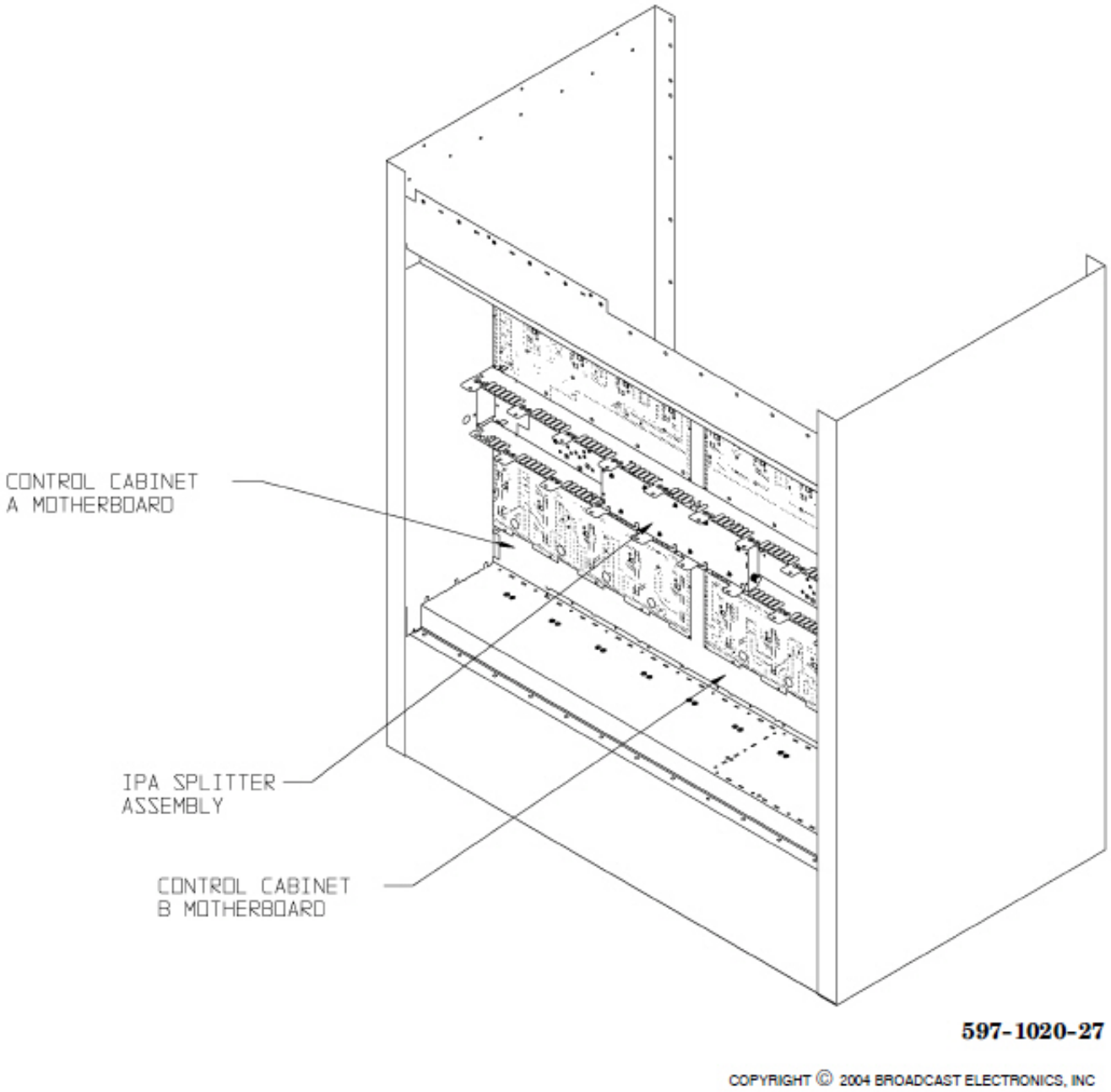

Figure 33. FM-10S/FMi 703 COMPONENT LOCATOR (2 OF 10).

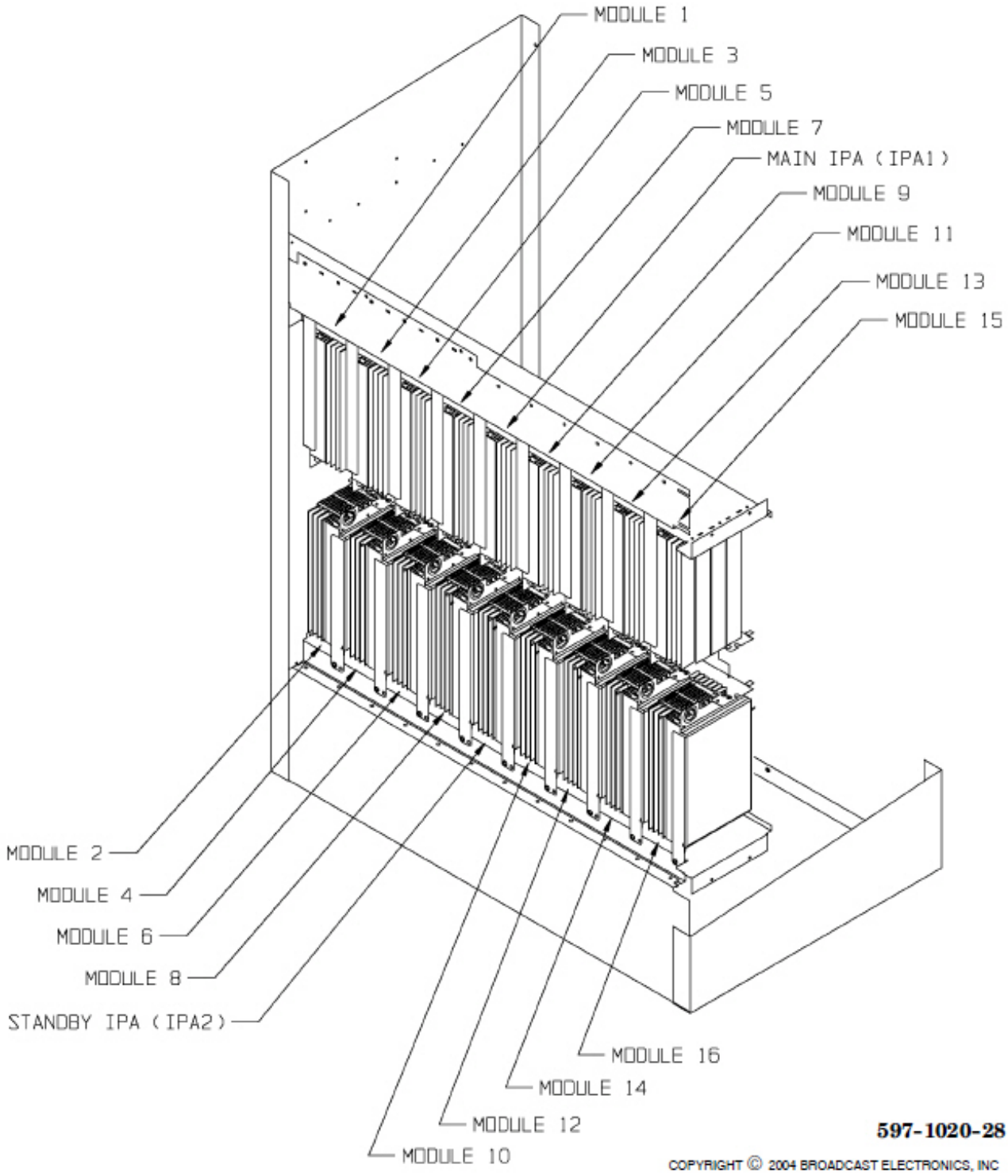

Figure 34. FM-10S/FMi 703 COMPONENT LOCATOR (3 OF 10).

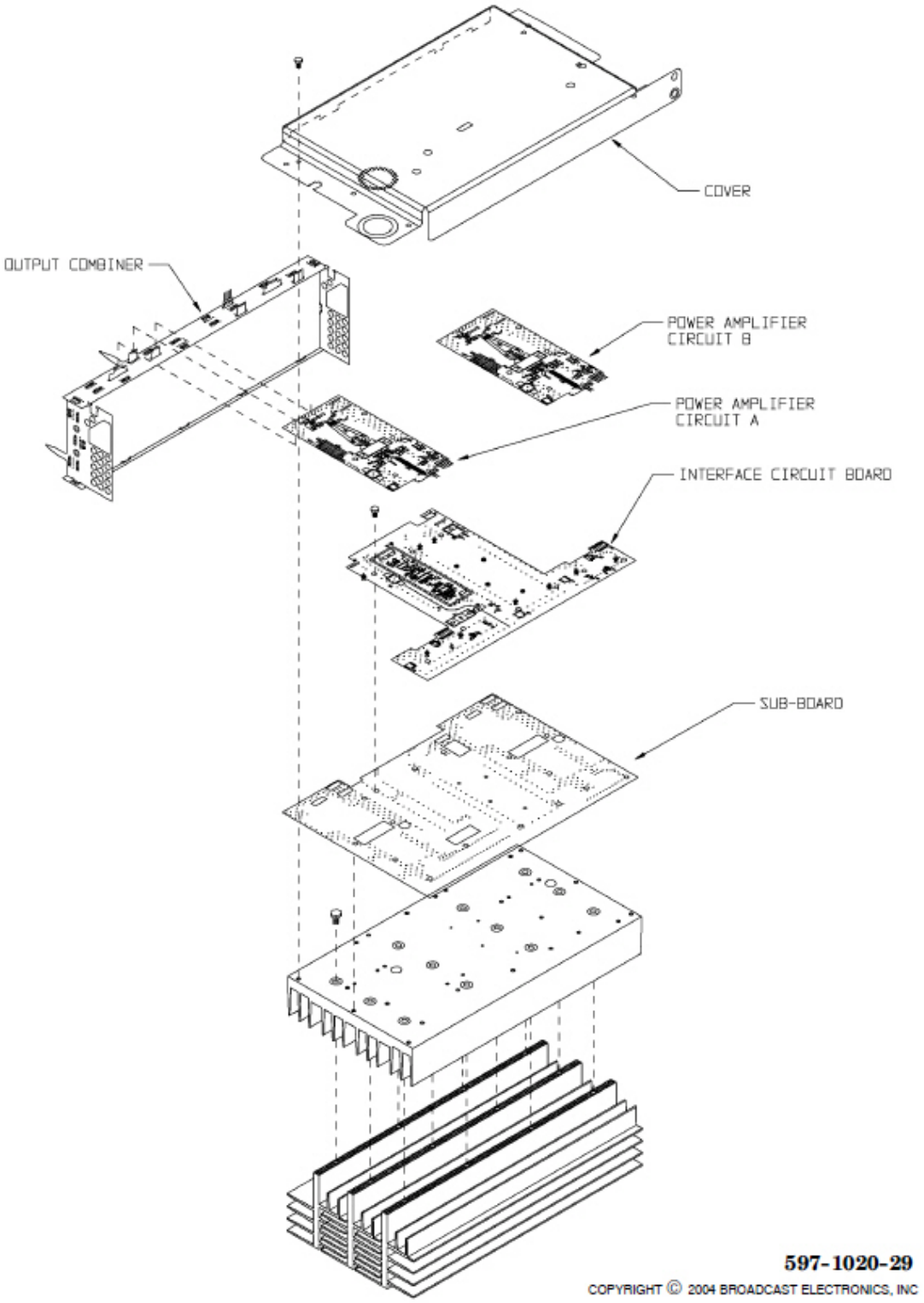

Figure 35. FM-10S/FMi 703 COMPONENT LOCATOR (4 OF 10).

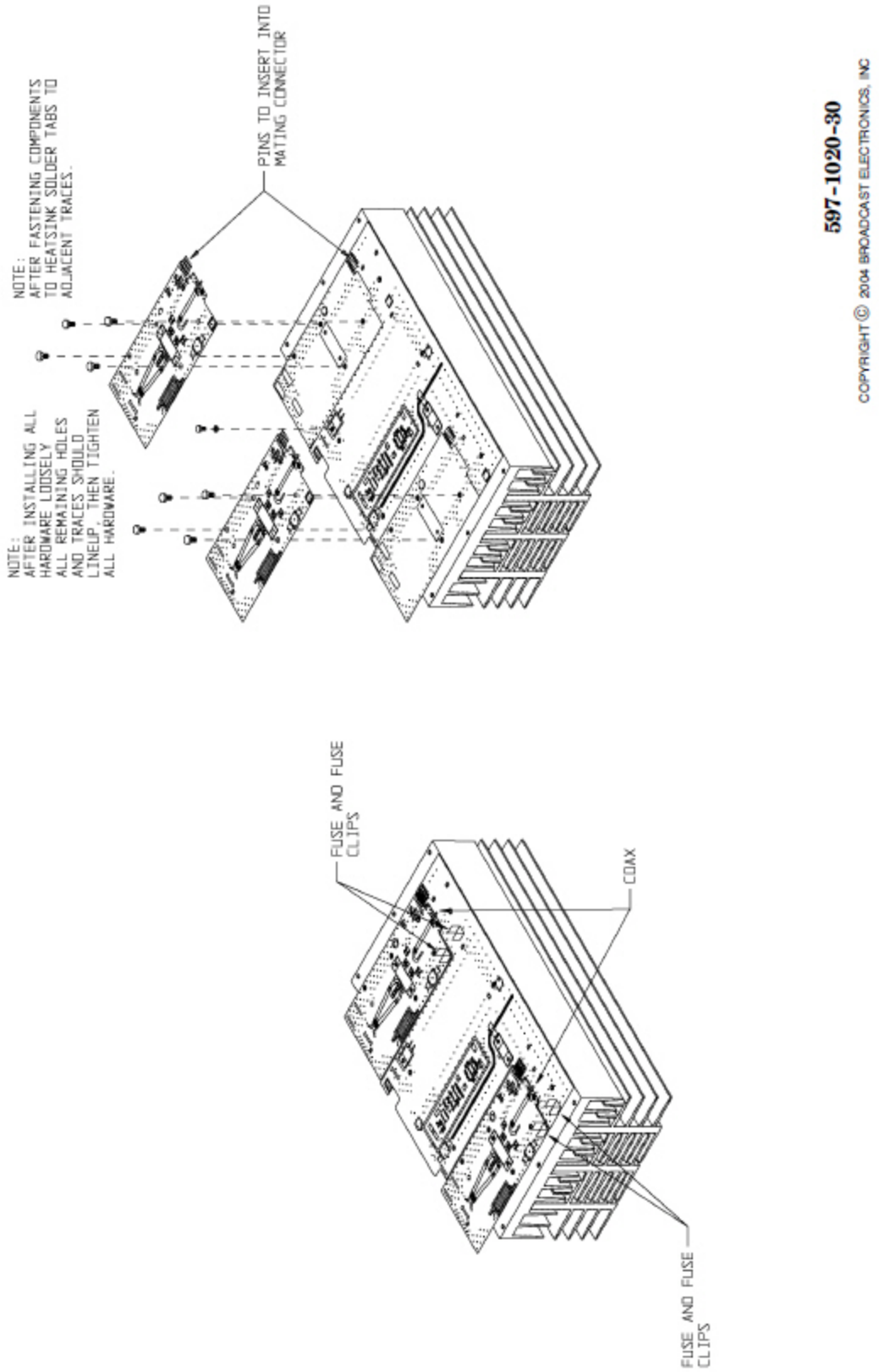

Figure 36. FM-10S/FMi 703 COMPONENT LOCATOR (5 OF 10).

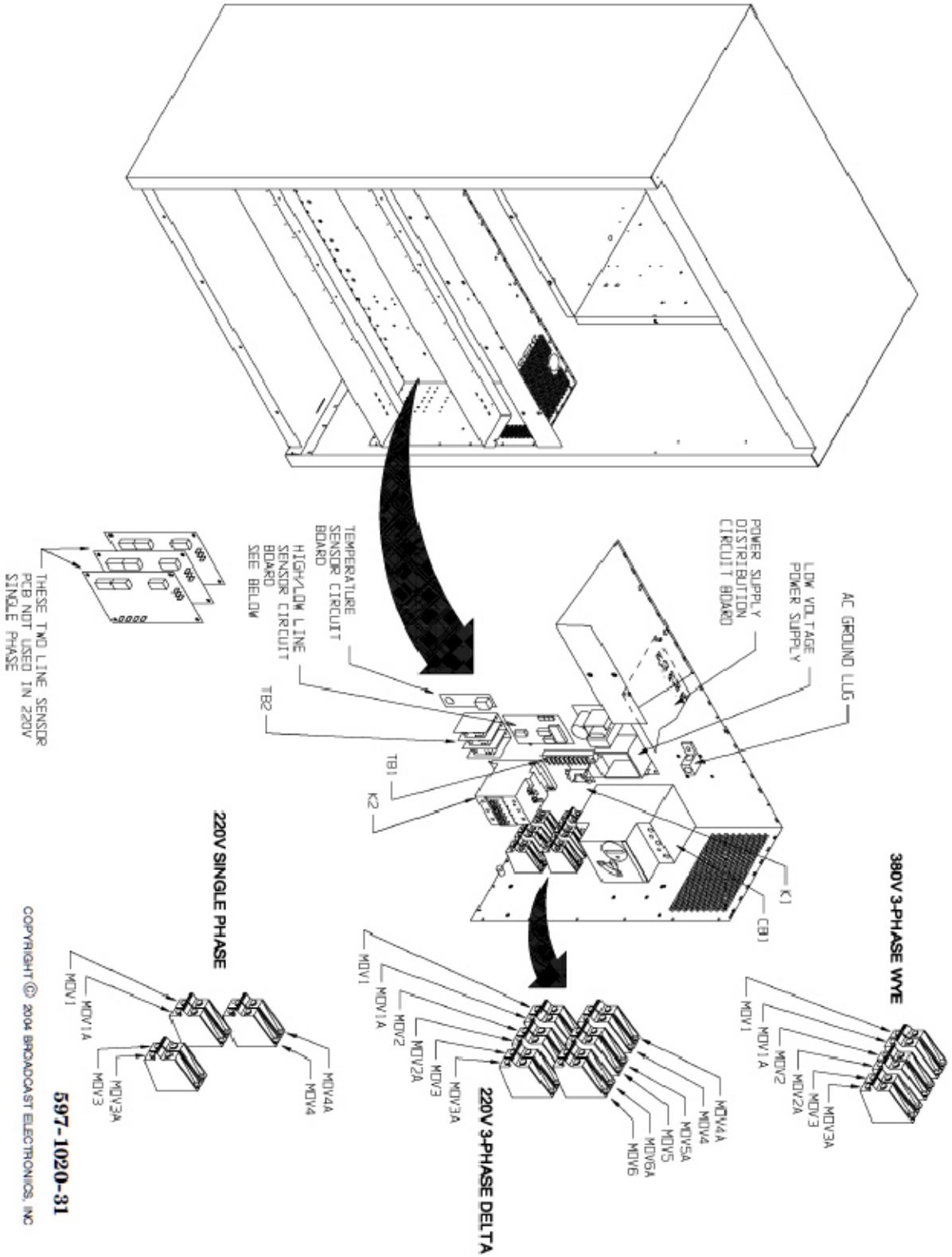

Figure 37. FM-10S/FMi 703 COMPONENT LOCATOR (6 OF 10).

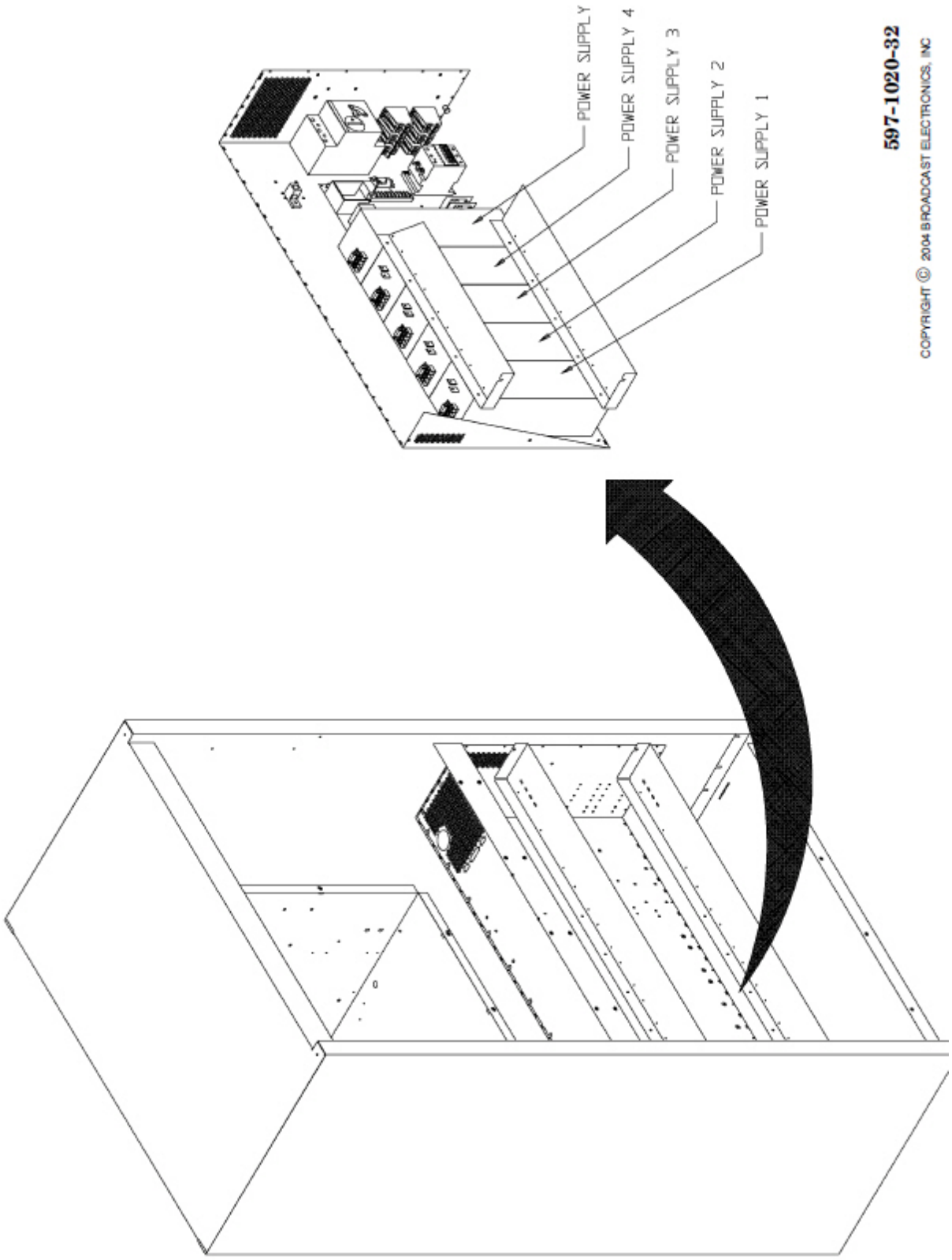

Figure 38. FM-10S/FMi 703 COMPONENT LOCATOR (7 OF 10).

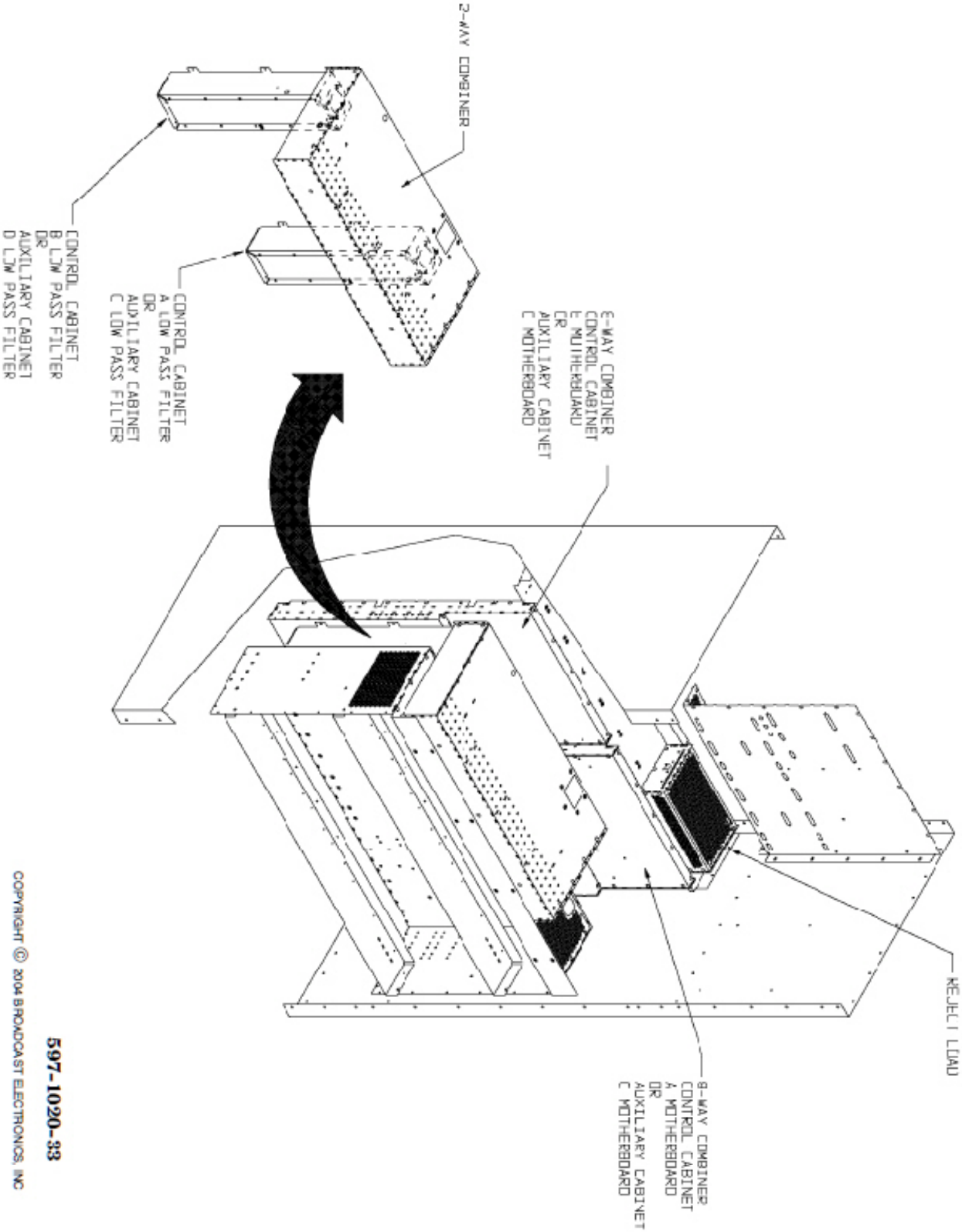

Figure 39. FM-10S/FMi 703 COMPONENT LOCATOR (8 OF 10).

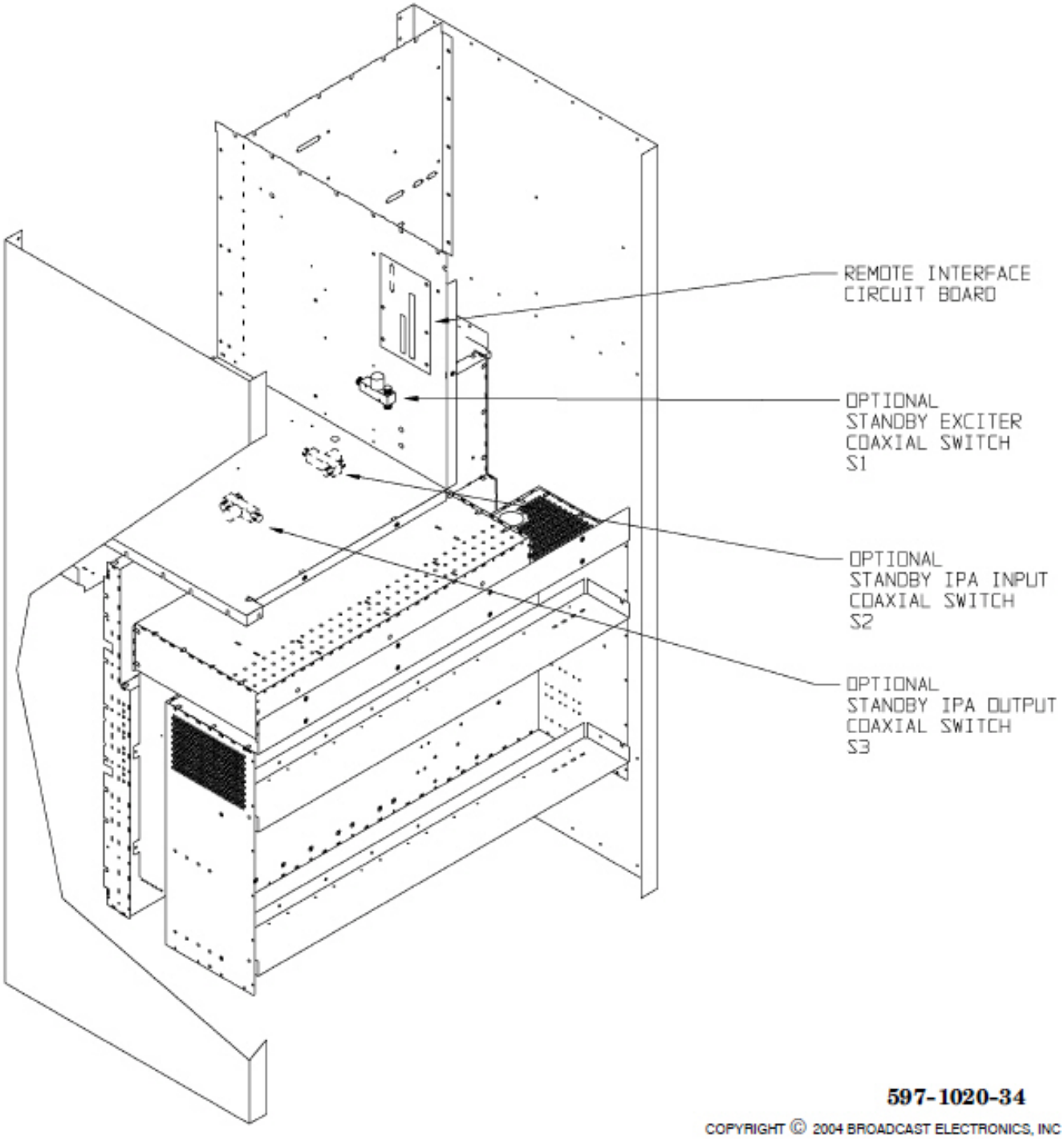

Figure 40. FM-10S/FMi 703 COMPONENT LOCATOR (9 OF 10).

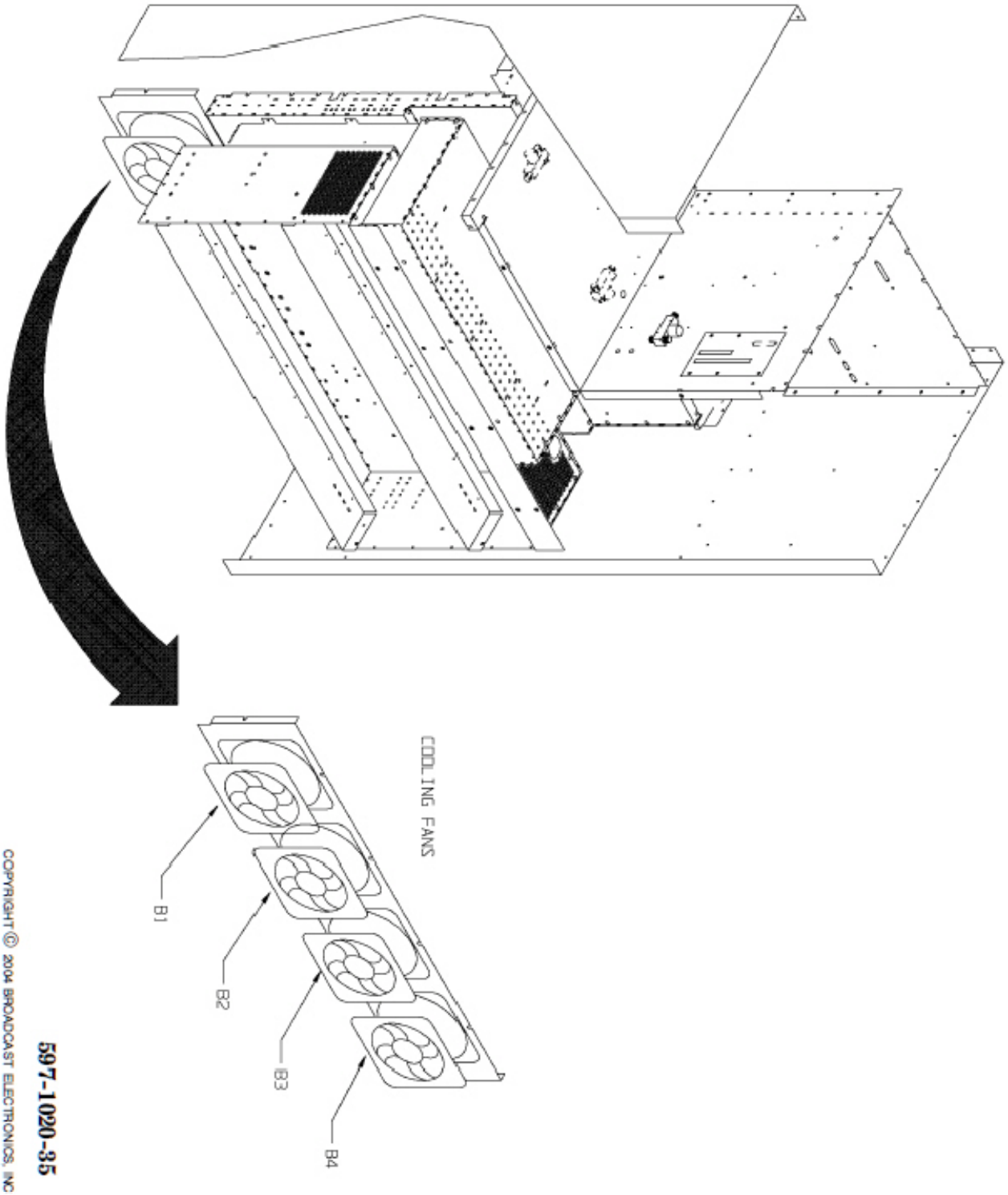

Figure 41. FM-10S/FMi 703 COMPONENT LOCATOR (10 OF 10).

TRANSMITTER COMPONENT LOCATIONS. Figure 32, through Figure 41, represent the transmitter component locations. Refer to Figure 32, through Figure 41 as required during the troubleshooting procedures to locate components within the transmitter.

POWER AMPLIFIER POWER SUPPLY MODULES. The FM-10S/FMi 703 is equipped with modular switching power supply units (refer to Figure 38). The power supplies are equipped with internal protection for high AC line voltage, high temperature conditions, and over-current conditions. If a supply is suspected to contain a fault, contact Broadcast Electronics Technical Services.

LOW VOLTAGE POWER SUPPLY. The FM-10S/FMi 703 transmitter low voltage power supply provides DC power for the controller circuitry (refer to Figure 37). The power supply is equipped with a fuse and should be checked if a failure occurs. To check the low voltage power supply module, proceed as follows:

WARNING DISCONNECT ALL TRANSMITTER PRIMARY POWER BEFORE PROCEEDING.

WARNING

Disconnect all transmitter primary power.

Operate the AC switch/circuit breaker to OFF.

Refer to Figure 22 and remove the lower rear access panel.

Check the power supply fuse. If the power supply fuse has not blown, contact Broadcast Electronics Technical Services.

Once the power supply troubleshooting has been completed, re-install the supply by reversing the preceding procedure.

NOTE A POWER AMPLIFIER MODULE CAN BE REMOVED OR INSTALLED WITH POWER APPLIED TO THE TRANSMITTER. IT IS STRONGLY RECOMMENDED A MODULE BE REMOVED/INSTALLED WITH POWER ENERGIZED ONLY WHEN A MODULE HAS FAILED AND MUST BE REPAIRED DURING A NON-MAINTENANCE PERIOD.

NOTE

POWER AMPLIFIER AND IPA MODULE TROUBLESHOOTING. Each transmitter power amplifier module contains circuitry requiring specialized equipment and test procedures for troubleshooting and repair operations. However, if it is determined that a power amplifier circuit board has failed, the repair can be performed in the field. For all other types of failures, contact Broadcast Electronics Technical Services to: 1) exchange a defective module for a reconditioned module or 2) obtain a module on loan during the repair of the defective module.

POWER AMPLIFIER MODULE AND IPA MODULE RF AMPLIFIER CIRCUIT BOARD REPLACEMENT. If a power amplifier module or IPA module is determined to be defective with a power amplifier circuit board fault, the circuit board can be replaced in the field. To replace an RF amplifier circuit board, proceed as follows:

NOTE A POWER AMPLIFIER MODULE CAN BE REMOVED OR INSTALLED WITH POWER APPLIED TO THE TRANSMITTER. IT IS STRONGLY RECOMMENDED A MODULE BE REMOVED/INSTALLED WITH POWER ENERGIZED ONLY WHEN A MODULE HAS FAILED AND MUST BE REPAIRED DURING A NON-MAINTENANCE PERIOD.

NOTE

l. Determine the power amplifier module to be removed.

2. Remove the power amplifier module as follows:

A. Remove the retaining screw and then loosen the knurled captive fastener.

B. Remove the power amplifier module from the chassis.

3. Remove the 4 screws securing the cover to the power amplifier module and remove the cover.

4. Remove the defective RF amplifier circuit board as follows:

A. Remove the 4 screws securing the RF amplifier circuit board to the heatsink.

B. Remove the fuse.

C. Unsolder the ground and RF output tabs from the combiner. Unsolder each tab as follows:

l. Apply heat to the tab using a soldering iron.

2. While heating the tab, carefully insert a knife or flat-blade screwdriver between the bottom of the module circuit board and the top of the sub-circuit board. Apply pressure and carefully pry-up to separate the module circuit board from the combiner.

D. Slide the amplifier circuit board from J1 and J2 on the interface circuit board and remove circuit board from the module.

5. Replace the circuit board by performing the above removal procedure in reverse order.

6. Replace the module cover.

7. Refer to Figure 42, and replace the power amplifier module as follows:

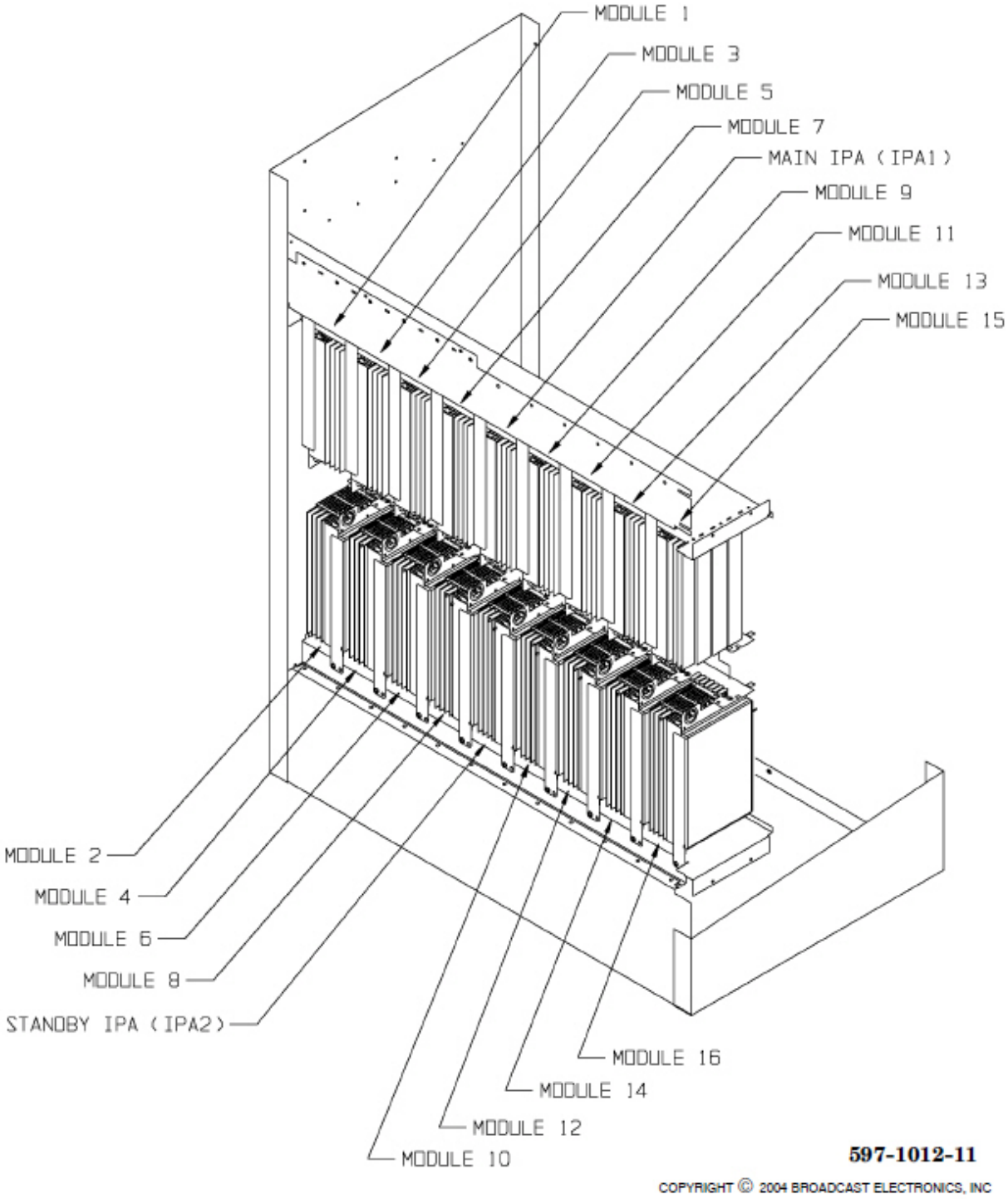

Figure 42. POWER AMPLIFIER/IPA MODULE INSTALLATION (1 OF 2).

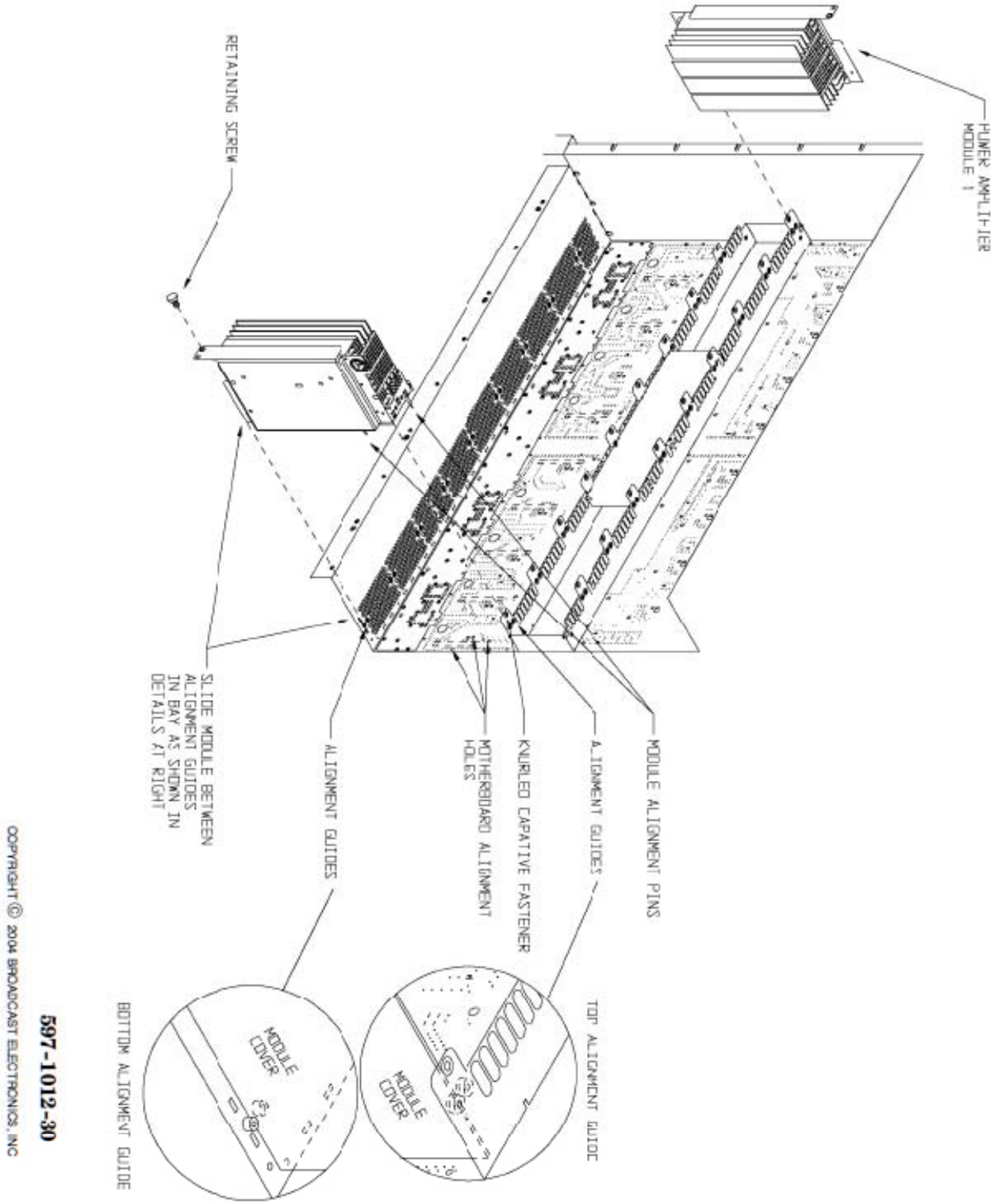

Figure 43. POWER AMPLIFIER/IPA MODULE INSTALLATION (2 OF 2).

A. Orient and align the module as shown between the guides. Slide the module into the chassis.

B. Ensure the module alignment pins are centered in the alignment holes in the motherboard and firmly push the module into the motherboard.

C. Secure the module to the chassis using the retaining screw and the knurled captive fastener.

COMPONENT REPLACEMENT PROCEDURE. Component replacement on printed circuit boards require extreme care to avoid damage to the circuit board traces. The following text describes the procedure to replace components on FM-10S/FMi 703 circuit boards.

On all circuit boards, the adhesive securing the copper trace to the board melts at almost the same temperature at which solder melts. A circuit board trace can be destroyed by excessive heat or lateral movement during soldering. Use of a small iron with steady pressure is required for circuit board repairs.

To remove a component from a circuit board, cut the leads from the body of the defective component while the device is still soldered to the board.

Grip each component lead, one at a time, with long-nose pliers. Rotate the circuit board and touch a soldering iron to the lead at the solder connection. When the solder begins to melt, push the lead through the back side of the board. Each lead may now be heated independently and pulled out of each hole. The holes may be cleared of solder by carefully re-heating each hole with a low wattage iron and removing the residual solder with a soldering vacuum tool.

WARNING MOST SOLVENTS WHICH WILL REMOVE ROSIN FLUX ARE VOLATILE AND TOXIC BY THEIR NATURE AND SHOULD BE USED ONLY IN SMALL AMOUNTS IN A WELL VENTILATED AREA, AWAY FROM FLAME SUCH AS FROM A SOLDERING IRON OR SMOKING MATERIALS. OBSERVE THE MANUFACTURER'S CAUTIONARY INSTRUCTIONS.

WARNING

Install the new component and apply solder from the bottom side of the circuit board. After soldering, remove flux with a cotton swab moistened with a suitable solvent. Rubbing alcohol is highly diluted and is not effective.

The board should be checked to ensure the flux has been removed and not just smeared. Rosin flux is not normally corrosive, but rosin will absorb enough moisture in time to become conductive and cause problems.

6 BE PART NUMBERS

This section provides parts lists for the FM-10S/FMi 703 Transmitter. The parts lists provide descriptions and part numbers of electrical components, assemblies, and selected mechanical parts required for maintenance. Each parts list entry in this section is indexed by reference designators appearing on the applicable schematic diagrams.

NOTE: By nature, the BOM for the FM-10S calls out the FX-50 exciter and the BOM for the FMi 703 calls out an FXi 250 with Exgine.

This bill of material uses an indented structure to show relationships of parts into sub assemblies. Example; all BOM LEVEL 2 parts are contained in the BOM LEVEL 1 part immediately above it.

BOM LEVEL	PART NO.	DESCRIPTION	QTY	REF. DES.
0	909-1010-226	FM-10S XMTR 220V 1PH		
..1	420-0518	SCREW,10-32X.375,S.S. FLH UC	17	
..1	463-5300	FILLER PLATE FOR SAMPLE PORT ON 3 1/8 LINE"	1	
..1	469-0366	FINGER STOCK (NOTE!!!!!)	200	
..1	909-1010-226T	FM-10S XMTR 220V 1PH BASIC TEST	1	
....2	320-0100-1	LCD DISPLAY W/CABLE	1	
.....3	320-0100	DISPLAY,LCD,16 CHARx2 LINES	1	
.....3	417-1640	FLAT FLEX CABLE ASSY, .100 X 16 POS	1	
....2	370-0176	FILTER, CABLE/CLAMP, 100 OHM, 13MM	1	
....2	375-0007-100	CORE, RF TRANSFORMER	4	
....2	375-0011	CORE, LOW FREQUENCY CHOKE	4	
....2	380-9100	FAN,W2E208-BA20-51,EBM	4	
....2	400-0000	GROMMET,1/2ID X 7/8"OD FOR 3/4"HOLE"	2	
....2	400-0207	STRIP,QUIET SHIELD,.250x.375""	1.65	
....2	401-0015	MTG,ADH BACK,SMS-A-15-PANDUIT	3	
....2	401-0022	CONNECTOR, SET SCREW, 1 1/2EMT"	2	
....2	401-0024	CONDUIT,AC ENTRY,SUMO	1	
....2	402-0000	TY-RAP	26	
....2	402-0001	TY-RAP,T TY24M,1-1/4 DIA	1	
....2	402-0008	MTG DEVICE,FOR #6SCR,TIE CBL	24	
....2	402-0014	CLAMP,HOSE 4 1/2	7	
....2	402-0839	CLAMP,CBL,5/8	4	
....2	402-0840	CLAMP,CBL 3/4	2	
....2	407-0168	FILTER,AIR,FXA 9.75x19.75"x.86""	2	
....2	411-0118	EMI FILTER ASSY, 18 POSITION, 2500 PF	1	
....2	417-0017	RECP,BNC,BULKHEAD,UG-492A/U	1	
....2	417-0105	ADAPT,PLUG-JACK ANGLE N UG27CU	2	
....2	417-0291	CONN,PLUG,25-PIN,D",SOLDER CUPS"	1	
....2	417-6121-250	SOCKET, AC OUTLET, 6 WAY, EUROPEAN	1	
....2	418-0035	ADPTR,JACK-JACK 82-66 AMPHENOL	1	
....2	420-0072	SCREW,10-32X3/4,PHL FLT SST	4	
....2	420-0108	SCREW,10-32X.500,S.S. PHH	6	
....2	420-0508	SCREW,10-32X.500,S.S. FLH	8	

BOM LEVEL	PART NO.	DESCRIPTION	QTY	REF. DES.
....2	420-0710	SCR,10-32 X 5/8,NATURAL SST,TRUSS HD,PHILLIPS DRIVE"	20	
....2	420-0817	ASSY,FEMALE SCREWLOCK 205817-1	20	
....2	420-3005	SCREW,5/16-18X1.000,S.S. BOLT	2	
....2	420-4105	SCREW,4-40X.312,S.S. PH	20	
....2	420-4106	SCREW,4-40X.375,S.S. PH	4	
....2	420-4992	SCREW,4-40X.750,NY SL PAN HD SC	5	
....2	420-6002	SCREW,6-32X.437,S.S. PH FH UC	191	
....2	420-8104	SCREW,8-32X.250,S.S. PHH	8	
....2	420-8121	SCREW,8-32X.375,BR PH	2	
....2	421-0102	10-32 KEP NUT	189	
....2	421-1003	1/4-20 HEX NUT	6	
....2	421-1113	RIV,CLOSED-END .125 X .316L	24	
....2	421-2001	2-56 S.S. NUT	4	
....2	421-3003	5/16-18 S.S. HEX NUT	2	
....2	421-4008	4-40 KEP NUT	20	
....2	421-6008	6-32 KEP NUT	32	
....2	421-6908	SHEET EDGE CONNECTOR 6-32	108	
....2	421-8002	8-32 HEX NUT, BRASS	6	
....2	422-0106	SCREW,10-32 X 3/8,PPH,SEM,SST"	8	
....2	422-6106	SCREW,SEMS 6-32 X 3/8 PAN PH. ST."	58	
....2	422-6107	SCREW,SEMS 6-32 X 7/16 PAN PH.ST."	122	
....2	423-0002	#10 LOCK SPLIT	12	
....2	423-1003	1/4-20 LOCK SPLIT	6	
....2	423-2001	#2 FLAT .250 X .120 X .025	8	
....2	423-2002	#2 LOCK SPLIT	4	
....2	423-3000	5/16 LOCK SPLIT	2	
....2	423-8002	#8 LOCK SPLIT	8	
....2	423-8006	#8 LOCK INT TOOTH	8	
....2	427-0001	FLANGE,3-1/8,301-014,MYAT	2	
....2	427-0004	INS-CONN ASSY,MYAT,301-010	1	
....2	441-0042	SPR,1/4RND X 3/16 #6 NYLON	11	
....2	441-1311	SPACER,RD,NYLON,.187 OD,.115 ID,.312 LONG	4	
....2	457-0044-200	HINGE,CONTROLLER,FMi 703/FMi 1405	1	
.....3	457-0044-009	HINGE, CONTROLLER, SUMO, UNPAINTED	1	
....2	463-5200-101	TRANSMISSION LINE,OUTER,FM10S/FMi703	1	
....2	463-5200-102	TRANSMISSION LINE,INNER,FM10S/FMi703	1	
....2	469-0365	FINGER STOCK,1S197520A	280	
....2	471-5211	COVER,RELAY PCB,SUMO	2	
....2	471-5228-200	TOP,EXTERNAL,FMi 703/FMi 1405	1	
....2	471-5229	BOTTOM,EXTERNAL,SUMO	1	
....2	471-5230	PARTITION,PS TO RF,SUMO	1	
....2	471-5233-100	DIVIDER,FAN MOUNTING,FM10S/FM20S	1	
....2	471-5234-200	PANEL,LOWER FRONT,FMi 703/FMi 1405	1	
....2	471-5237	BRACE,REAR CORNER,SUMO	2	
....2	471-5238-300	DOOR,REAR LOWER,FMi703 W ABB Tmax	1	
....2	471-5239	PLENUM,AIR FILTER,SUMO	1	
....2	471-5240-200	PANEL,AIR FILTER ACCESS,FMi 703/FMi 1405	1	
....2	471-5242-200	DOOR,REAR UPPER,FMi 703/FMi 1405	1	
....2	471-5243-200	DOOR,PA BAY,FMi 703/FMi 1405	1	

BOM LEVEL	PART NO.	DESCRIPTION	QTY	REF. DES.
....2	471-5244-200	SIDE PANEL,EXTERNAL,FMi 703/FMi 1405	2	
....2	471-5245	ANGLE,TOP,SUMO	1	
....2	471-5248	BRACE,HORIZONTAL,SUMO	1	
....2	471-5251-203	DOOR,CONTROLLER,FM10S HD COLORS	1	
.....3	471-5251-200	DOOR,CONTROLLER,FMi 703/FMi 1405,UNSCREENED	1	
....2	471-5252-100	CHASSIS,CONTROLLER,SUMO	1	
....2	471-5253	PARTITION,RF TO EXCITER,SUMO	1	
....2	471-5254-200	PANEL,MIDDLE FRONT,FMi 703/FMi 1405	1	
....2	471-5257	SUPPORT,EXCITER,SUMO	4	
....2	471-5258	ANGLE,EIA MOUNT,SUMO	2	
....2	471-5260	FILLER PLATE,RF OUTPUT,10 KW SUMO	1	
....2	471-5261	SUPPORT,PS,SUMO	1	
.....3	471-5261-009	SUPPORT,PS,SUMO,UNSCREENED	1	
....2	471-5266	FILLER PLATE,CONTROLLER,SUMO	2	
....2	471-5273-100	PLATE,VPE,FM10S	1	
....2	471-5394	BRACKET,CE PLUG STRIP,SUMO	1	
....2	481-0038-200	KNOB,1.5 DIA.,FMi 703/FMi 1405"	1	
.....3	481-0038-009	KNOB,1.5 DIA.,DESIGN STANDARDS RKP-7-B"	1	
....2	481-0039-200	KNOB,.75 DIA.,FMi 703/FMi 1405"	1	
.....3	481-0039-009	KNOB,.75 DIA.,DESIGN STANDARDS RKP-5-B"	1	
....2	486-0020	HANDLE,OVAL,CHROME,10-32 X 4 MTG"	2	
....2	486-2285	HANDLE,OVAL,BLK,10-32 X 4	4	
....2	486-5500-100	HANDLE FOR ABB T3 BREAKER	1	
....2	506-0175-204	PANEL,BLANK,FMi,1RU	1	
....2	506-0350-204	PANEL,BLANK,FXi,2RU	2	
....2	506-0700-204	PANEL,BLANK,FMi,4RU	1	
....2	540-0016-010	PWR SPLY,5KW,TDI,50VDC,240VAC,1PH,5X5X15.5	4	
....2	594-0019	LABEL,DANGER HV 1X 1.5	3	
....2	594-0073	LABEL,WARNING ROTATING FANS	1	
....2	594-0099	LABEL,WARNING HIGH CURRENT",1" X 1.5",VINYL,ADHESIVE BACKED"	5	
....2	594-0501	LABEL,CE ELECTRICAL SYMBOLS	0.5	
....2	594-0505	LABEL, WARNING-ONLY AUTHORIZED PERSONNEL	1	
....2	682-0910	CORD, AC POWER, UNIVERSAL JUMPER	1	
....2	700-1220	TAPE, 220VAC	6	
....2	919-0515	ASSY,PCB,MODULE CONTROL,FM-10S(SBCM)	1	
.....3	006-1075	CAP,LYTIC,10uF,50V,20%,SMD note	6	C14, C15, C16, C17, C212, C213
.....3	007-1034	CAP,CER,0.01uF,50V,10%,SMD	8	C204, C205, C206, C207, C208, C209, C210, C211

BOM LEVEL	PART NO.	DESCRIPTION	QTY	REF. DES.
.....3	007-1044	CAP,CER,0.1uF,50V,10%,SMD note	174	C1, C2, C3, C4, C5, C6, C7, C8, C9, C10, C11, C12, C13, C18, C19, C20, C21, C22, C23, C24, C25, C26, C27, C28, C29, C30, C31, C32, C33, C34, C35, C36, C37, C38, C39, C40, C41, C42, C43, C45, C46, C47, C48, C49, C50, C51, C52, C53, C54, C55, C56, C57, C58, C59, C60, C61, C62, C63, C64, C65, C66, C67, C68, C69, C70, C71
.....3	102-1000	RES,CHIP,100 OHMS,1/10W,1%,SMD	1	R2
.....3	102-1001	RES,CHIP,1.00K OHMS,1/10W,1%,SMD	42	R11, R111, R50, R51, R52, R53, R54, R55, R56, R57, R148, R149, R150, R151, R152, R153, R154, R155, R13, R15, R17, R19, R21, R23, R25, R27, R113, R115, R117, R119, R121, R123, R125, R127, R76, R77, R78, R79, R176, R177, R178, R179
.....3	102-1002	RES,CHIP,10.0K OHMS,1/10W,1%,SMD	67	R3, R5, R7, R9, R10, R28, R29, R30, R31, R32, R33, R34, R35, R36, R103, R105, R107, R109, R110, R128, R129, R130, R131, R132, R133, R134, R135, R136, R37, R39, R40, R41, R137, R138, R139, R60, R61, R62, R63, R64, R65, R67, R160, R161, R162, R163, R164, R165, R166, R167, R66, R68, R69, R70, R71, R72, R73, R74, R
.....3	102-1003	RES,CHIP,100K OHMS,1/10W,1%,SMD	18	R1, R12, R14, R16, R18, R20, R22, R24, R26, R112, R114, R116, R118, R120, R122, R124, R126, R38

BOM LEVEL	PART NO.	DESCRIPTION	QTY	REF. DES.
.....3	102-1500	RES,CHIP,150 OHMS,1/10W,1%,SMD	16	R42, R43, R44, R45, R46, R47, R48, R49, R140, R141, R142, R143, R144, R145, R146, R147
.....3	102-2001	RES,CHIP,2.00K OHMS,1/10W,1%,SMD	2	R58, R158
.....3	102-2002	RES,CHIP,20.0K OHMS,1/10W,1%,SMD	4	R6, R8, R106, R108
.....3	102-2212	RES,CHIP,22.1K OHMS,1/10W,1%,SMD	2	R4, R104
.....3	204-0914	DIODE,SWITCHING,MMBD914LT1,SMD	2	D1, D2
.....3	210-3906-001	TSTR,3906,SMD	5	Q1, Q2, Q3, Q101, Q102
.....3	224-0014	IC,74HC14,SCHMITT TRIG INVERT	1	U11
.....3	224-0074	IC,DUAL D-FLIP-FLOP,POS EDGE,SMD	1	U10
.....3	224-0244	IC,74HC244,OCTAL/LINE DRIVERS,SMD	2	U18, U118
.....3	224-0351	IC,ANALOG SWITCH (NOTE)	4	U14, U15, U114, U115
.....3	224-1491	IC,OP AMP,QUAD,RAIL TO RAIL,SMD	6	U16, U17, U116, U117, U19, U119
.....3	224-7473	IC,74HC373,8-LATCH,SMD	2	U3, U103
.....3	229-0158	IC,A/D AND MUX,SMD	2	U9, U109
.....3	229-0256-001	IC,32K X 8 RAM,SMD	2	U6, U106
.....3	229-2003	IC,ULN2003A MC1413P	4	U12, U13, U112, U113
.....3	229-8032-001	IC,MICPRCR,HIGH,PRFM, 8032,PLCC PKG	2	U2, U102
.....3	229-8255-001	IC,82C55A,PERIPH I/F,PLCC	2	U8, U108
.....3	231-7905	VR,LM79L05AC,NEG VOLT,100mA,SMD	1	U20
.....3	325-0250	LED,DUAL RED/GREEN,LOW PROFILE,SMD	18	DS1, DS2, DS3, DS4, DS5, DS6, DS7, DS8, DS9, DS101, DS109, DS110, DS111, DS112, DS113, DS114, DS115, DS116
.....3	390-0055	OSC,CRYSTAL,11.0592MHZ,SMD	1	U1
.....3	413-1206	CHIP,TEST POINT,1206,SMD	24	TP1, TP2, TP3, TP4, TP5, TP6, TP7, TP8, TP9, TP10, TP11, TP12, TP13, TP14, TP15, TP101, TP102, TP103, TP104, TP105, TP106, TP107, TP108, TP109
.....3	417-2502-FER	RCPT,25 PIN D,FEMALE,FERITE FILTER	4	J1, J2, J101, J102
.....3	417-2600	CONN,HEADER,26PIN	2	J5, J105
.....3	417-2804-001	SOCKET, 28 PIN IC, SMD	2	XU5, XU105
.....3	417-4004	CONN,HEADER,2 PIN	1	J8
.....3	417-8809	CONN, 9 PIN D, FEMALE, FILTERED	4	J3, J4, J103, J104
.....3	418-0255	CONN,MALE,4PIN	1	J6
.....3	418-8825	CONN,25 PIN D, MALE, FILTERED	1	J7
.....3	431-1600	SOCKET,16-PIN,DIP,SMD note	4	XU12, XU13, XU112, XU113

BOM LEVEL	PART NO.	DESCRIPTION	QTY	REF. DES.
.....3	431-2000	SOCKET,20-PIN,DIP,SMD	2	XU4, XU104
.....3	431-3200	SOCKET,32-PIN,PLCC,SMD note	2	XU7, XU107
.....3	431-4400	SOCKET,44-PIN,PLCC,SMD note	4	XU2, XU8, XU102, XU108
.....3	519-0515	PCB MACH,MODULE CONTROL,FM-10S	1	
.....3	979-0515-004	KIT,SOFTWARE,FM10S MOD CONT PAL U4	2	U4, U104
.....4	220-0050	IC,PLD,64X32 AND-ARRAY,GAL16V8D-7LP	1	U4, U104
.....3	979-0515-005	KIT,SOFTWARE,FM10S MOD CONT ROM U5	2	U5, U105
.....4	229-7256	IC,CMOS,32K X 8 EPROM	1	U5, U105
.....3	979-0515-007	KIT, SOFTWARE,FM-10S MODULE CONTROL FLASH	2	U7, U107
.....4	229-8512	EC,FLASH MEMORY,64K x 8,PLCC	1	
....2	919-0524	ASSY, AC LINE FAULT INDICATOR PCB	1	
.....3	323-9217	IND,LED,RED 521-9240	3	DS1, DS2, DS3
.....3	407-0074	SPR,LED .25 ODX.147 1D X.22L	3	XDS1, XDS2, XDS3
.....3	417-0677	CONN,PCB MT,6PIN MALE	1	J1
.....3	519-0524	MACH, AC LINE FAULT INDICATOR PCB	1	
....2	919-0527	ASSY, PCB, I/O, FM-10S, FM-20S	1	
.....3	031-2033	CAP,MYLAR FILM,.0022uF,100V,10%	8	C9, C10, C11, C12, C13, C14, C15, C16
.....3	100-1031	RES,100 OHM,1/4W,1%,METAL	10	R12, R13, R14, R15, R16, R17, R18, R19, R20, R21
.....3	103-1021	RES,10 OHM,1/4W,1%,METAL	5	R22, R23, R24, R25, R26
.....3	201-0007	ZENER VOLTAGE SUPPRESSOR, 7.5V	6	D1, D2, D3, D4, D5, D6
.....3	201-0015	ZENER VOLTAGE SUPPRESSOR,15V	38	D7, D8, D9, D10, D11, D12, D13, D14, D15, D16, D17, D18, D19, D20, D21, D22, D23, D24, D25, D26, D27, D28, D29, D30, D31, D32, D33, D34, D35, D36, D37, D38, D39, D40, D41, D42, D43, D44

BOM LEVEL	PART NO.	DESCRIPTION	QTY	REF. DES.
.....3	411-0001	FILTER,EMI 10,000PF 3PIN	71	FL1, FL2, FL3, FL4, FL5, FL6, FL7, FL8, FL9, FL10, FL11, FL12, FL13, FL14, FL15, FL16, FL17, FL18, FL19, FL20, FL21, FL22, FL23, FL24, FL25, FL26, FL27, FL28, FL29, FL30, FL31, FL32, FL33, FL34, FL35, FL36, FL37, FL38, FL39, FL40, FL41, FL42, FL43, FL44, FL45, FL46, FL47, FL48, FL49, FL50, FL51, FL52, FL5
.....3	417-0902	RCPT, 9 PIN D, MALE	2	J1, J2
.....3	417-1513	RCPT,15 PIN D, FEMALE	1	J9
.....3	417-2010	SOCKET, STRIP, 20 POSITION, SINGLE ROW	1	J6
.....3	417-2502	RCPT,25 PIN D, FEMALE	1	J3
.....3	417-3704	RCPT,37 PIN D,FEMALE	2	J4, J5
.....3	417-5017	HEADER,50-PIN,RT ANGLE,.100 CENTERS	1	J8
.....3	417-5018	HEADER, 60 PIN,RT ANGLE, .100 CENTERS	1	J7
.....3	519-0527	PCB, MACH I/O, FM-20S	1	
....2	919-0528	ASSY, PCB, REMOTE INTERFACE, FM-20S	1	
.....3	003-1054	CAP,CER,MNLY,.1uF,50V,20%	1	C1
.....3	103-1435	RES,14.3K OHM,1/4W,1%,METAL	2	R1, R2
.....3	412-1600	BARR STP,16 POS,BEAU	1	TB2
.....3	412-3000	BARR STP,30 POS,BEAU61-5-30-50	1	TB1
.....3	417-0677	CONN,PCB MT,6PIN MALE	1	J3
.....3	418-0900	CONN,9 PIN 640501-5 AMP	2	J1, J2
.....3	418-3704-FER	CONNECTOR, 37 PIN D, MALE, FER FIL	1	J4
.....3	418-8825	CONN,25 PIN D, MALE, FILTERED	1	J5
.....3	519-0528	PCB, MACH, REMOTE INTERFACE, FM-20S	1	
.....3	601-0022	WIRE,AWG22,BUSS	0.25	W2, W3, W4
....2	919-0529-001	ASSY, DIRECTIONAL COUPLER PCB, FM-10S	1	
.....3	031-2033	CAP,MYLAR FILM,.0022uF,100V,10%	5	C8, C16, C23, C28, C31
.....3	041-1031	CAP,MICA,1000PF,100V,1%	1	C1
.....3	042-3922	CAP,MICA,390PF,100V,5%	21	C2, C3, C4, C5, C6, C7, C10, C12, C15, C17, C18, C19, C20, C21, C22, C24, C25, C26, C27, C29, C30
.....3	100-1051	RES,10K OHM,1/4W,1%	14	R6, R7, R10, R11, R15, R19, R22, R23, R26, R27, R30, R31, R34, R35
.....3	103-1626	RES,162K OHM,1/4W,1%,METAL	1	R2

BOM LEVEL	PART NO.	DESCRIPTION	QTY	REF. DES.
.....3	103-4753	RES,475 OHM,1/4W,1%,METAL	7	R8, R9, R17, R24, R25, R32, R33
.....3	103-4996	RES,499K OHM,1/4W,1%,METAL	2	R1, R3
.....3	130-5621	RES,56 OHM,2W,5%	7	R4, R5, R13, R20, R21, R28, R29
.....3	201-2800	DIODE,HOT CARRIER	15	D43, D44, D45, D46, D47, D50, D51, D52, D53, D54, D55, D56, D57, D58, D59
.....3	360-0022	CHOKE,RF 430MA RES FREQ 115MHZ	21	L1, L2, L3, L4, L5, L6, L10, L11, L12, L13, L14, L15, L16, L17, L18, L19, L20, L21, L22, L23, L24
.....3	417-0259	CONN, BNC PCB MOUNT	3	J9, J10, J12
.....3	417-2010	SOCKET, STRIP, 20 POSITION, SINGLE ROW	1	J1
.....3	519-0529	PCB, MACH, DIRECTIONAL COUPLER, FM-20S	1	
....2	919-0530	ASSY, PCB, FRONT PANEL, FM-20S (SBCM)	1	
.....3	007-1044	CAP,CER,0.1uF,50V,10%,SMD note	12	C1, C2, C4, C5, C6, C7, C10, C11, C12, C13, C14, C15
.....3	070-1064	CAP,TANT,10uF,35V,20%,SMD	1	C3
.....3	100-1531	RES,150 OHM,1/4W,1%	7	R1, R2, R3, R4, R5, R6, R7
.....3	102-1001	RES,CHIP,1.00K OHMS,1/10W,1%,SMD	2	R8, R9
.....3	102-1002	RES,CHIP,10.0K OHMS,1/10W,1%,SMD	5	R23, R24, R25, R26, R27
.....3	103-1021	RES,10 OHM,1/4W,1%,METAL	11	R10, R12, R14, R15, R16, R17, R18, R19, R21, R22, R30
.....3	103-1212	RES,METAL FILM,12.1 OHMS,1/4W,1%	1	R29
.....3	103-1782	RES,17.8 OHM,1/4W,1%,METAL	3	R11, R13, R20
.....3	179-1053	RES,TRMR,10K,10 TURN	1	R28
.....3	204-0015	TRANSZORB,15V,SMD	9	D1, D2, D3, D4, D5, D6, D7, D8, D9
.....3	224-2003	IC,DRIVER,ULN2003A,SMD	1	U5
.....3	224-4070	IC,CD4070 QUAD XOR,CMOS,SMD	1	U4
.....3	224-7211	IC,4 DIGIT LCD DRIVER,ICM7211	1	U3
.....3	229-2210-001	IC,ISPGAL22V10C,PLCC (N)	1	U2
.....3	229-8255-001	IC,82C55A,PERIPH I/F,PLCC	1	U1
.....3	320-0021	DISP,LCD,4-DIGIT,0.7	1	DS1
.....3	320-0037	LED,RED,DIFFUSED CHIMNEY	5	DS2, DS3, DS4, DS5, DS6
.....3	320-0322	LED,GREEN,DIFFUSED CHIMNEY	2	DS7, DS8
.....3	340-0004	SW,JUMPER PROGRAMMABLE	2	P4, P5
.....3	340-0139	SW,PB,MOM,LED ILLUMINATED,YEL	10	S3, S5, S6, S7, S8, S9, S10, S12, S13, S16
.....3	340-0140	SW,PB,MOM,LED ILLUMINATED,GRN	1	S1
.....3	340-0143	SW,PB,MOM,LED ILLUMINATED,RED	3	S2, S4, S11

BOM LEVEL	PART NO.	DESCRIPTION	QTY	REF. DES.
.....3	340-2522	SWITCH, ENCODER,ROTARY,GRAYHILL	2	S14, S15
.....3	413-1206	CHIP,TEST POINT,1206,SMD	1	TP1
.....3	417-0003	CONN,HEADER 3 PIN	3	J1, J2, J5
.....3	417-0179	HEADER,10-PIN,.1 SP,W/LATCHES	1	J12
.....3	417-0200	CONN,HEADER 20 PIN	1	J4, J10
.....3	417-0227	CONN,HEADER,50-PIN MALE	1	J11
.....3	417-2837	HEADER 8-PIN .100 R.ANGLE LOCKING"	1	J3
.....3	519-0530	PCB, MACH, FRONT PANEL, FM-20S	1	
....2	919-0531	ASSY, PCB, SUPERVISOR, S SERIES (SBCM)	1	
.....3	006-1075	CAP,LYTIC,10uF,50V,20%,SMD note	2	C114, C115
.....3	006-4755	CAP,ELECTRO,4.7UF,10%,35V,SMD	15	C48, C61, C62, C65, C66, C67, C68, C69, C70, C71, C72, C113, C122, C123, C124
.....3	007-1022	CAP,CER,100pF,50V,2%,SMD	34	C19, C20, C21, C22, C23, C24, C25, C26, C85, C86, C87, C88, C89, C90, C91, C92, C96, C97, C98, C99, C100, C101, C102, C103, C104, C105, C106, C107, C117, C118, C127, C128, C129, C130
.....3	007-1044	CAP,CER,0.1uF,50V,10%,SMD note	49	C1, C2, C3, C4, C5, C6, C7, C10, C11, C12, C13, C14, C15, C16, C17, C18, C27, C28, C45, C46, C47, C52, C53, C54, C55, C56, C57, C58, C59, C76, C78, C79, C80, C81, C82, C83, C84, C93, C94, C95, C108, C109, C111, C112, C116, C125, C126, C131, C137
.....3	007-1054	CAP,CER,1uF,50V,10%,SMD	32	C8, C9, C29, C30, C31, C32, C33, C34, C35, C36, C37, C38, C39, C40, C41, C42, C43, C44, C60, C63, C64, C73, C74, C75, C77, C119, C120, C132, C133, C134, C135, C136
.....3	007-3923	CAP,CER,390pF,100V,5%,SMD	4	C49, C50, C51, C110
.....3	102-1000	RES,CHIP,100 OHMS,1/10W,1%,SMD	7	R58, R153, R154, R207, R208, R209, R210

BOM LEVEL	PART NO.	DESCRIPTION	QTY	REF. DES.
.....3	102-1001	RES,CHIP,1.00K OHMS,1/10W,1%,SMD	17	R6, R7, R16, R17, R18, R19, R104, R105, R106, R107, R108, R109, R110, R111, R224, R231, R232
.....3	102-1002	RES,CHIP,10.0K OHMS,1/10W,1%,SMD	97	R1, R2, R3, R4, R5, R12, R13, R14, R15, R20, R23, R24, R28, R29, R30, R31, R32, R33, R34, R37, R40, R43, R46, R49, R52, R55, R63, R64, R65, R66, R67, R68, R69, R70, R71, R72, R73, R74, R75, R76, R77, R78, R79, R80, R81, R82, R83, R84, R85, R86, R87, R88, R89, R90, R96, R97, R100, R102, R103, R112, R113, R114, R115,
.....3	102-1003	RES,CHIP,100K OHMS,1/10W,1%,SMD	2	R8, R91
.....3	102-1331	RES,CHIP,1.33K OHMS,1/10W,1%,SMD	6	R25, R26, R94, R95, R168, R169
.....3	102-1553	RES,CHIP,15.0K OHMS,1/10W,1%,SMD	1	R59
.....3	102-2001	RES,CHIP,2.00K OHMS,1/10W,1%,SMD	41	R9, R21, R35, R38, R41, R44, R47, R50, R53, R56, R129, R130, R131, R132, R133, R134, R135, R136, R137, R138, R139, R140, R190, R192, R193, R194, R195, R196, R197, R198, R199, R200, R201, R202, R215, R216, R222, R233, R234, R235, R236
.....3	102-2002	RES,CHIP,20.0K OHMS,1/10W,1%,SMD	3	R205, R211, R212
.....3	102-2431	RES,CHIP,2.43K OHMS,1/10W,1%,SMD	5	R60, R61, R62, R155, R163
.....3	102-2742	RES,CHIP,27.4K,1/10W,1%,SMD	1	R10

BOM LEVEL	PART NO.	DESCRIPTION	QTY	REF. DES.
.....3	102-3304	RES,CHIP,3.3M,1/10W,10%,SMD	34	R36, R39, R42, R45, R48, R51, R54, R57, R120, R121, R122, R123, R124, R125, R126, R127, R141, R142, R143, R144, R145, R146, R147, R148, R149, R150, R151, R152, R188, R191, R218, R219, R220, R221
.....3	102-3322	RES,CHIP,33.2 K,1/10W,1%,SMD	6	R92, R93, R160, R161, R164, R165
.....3	102-4421	RES,CHIP,4.42K OHMS,1/10W,1%,SMD	1	R128
.....3	102-5041	RES,4.99K OHM,1/10W,1%	10	R11, R22, R98, R99, R101, R170, R171, R203, R204, R206
.....3	102-6341	RES,CHIP,6.34K,1/10W,1%,SMD	1	R229
.....3	198-1054	TRMR,10K OHMS,TOP ADJ,SMD (N)	1	R27
.....3	204-0914	DIODE,SWITCHING,MMBD914LT1,SMD	2	D2, D4
.....3	216-0074	IC,TL074CD,QUAD OP AMP,SMD	5	U14, U15, U27, U31, U32
.....3	216-7002	IC,MOSFET,2N7002LT1,SMD	9	Q1, Q2, Q3, Q4, Q5, Q6, Q7, Q8, Q9
.....3	224-0244	IC,74HC244,OCTAL/LINE DRIVERS,SMD	1	U50
.....3	224-0351	IC,ANALOG SWITCH (NOTE)	1	U1
.....3	224-0552	IC,DUAL UART,FIFO,PRINTER PORT,SMD	1	U19
.....3	224-2410	IC,RS-232 MULTI-TRANSCEIVER,,SMD	3	U20, U21, U22
.....3	224-7225	IC,QUAD D/A,8 BIT,TLC7225	3	U33, U34, U47
.....3	224-7548	IC, D/A CONVERTER, 12 BIT, PLCC	4	U8, U24, U25, U26
.....3	229-0033	IC,OPTOIS,4N33	25	U10A, U10B, U11A, U11B, U12A, U12B, U13A, U13B, U16A, U16B, U40A, U40B, U41A, U41B, U42A, U42B, U43A, U43B, U44A, U44B, U45A, U45B, U48A, U49A, U49B
.....3	229-0111	IC,AC INPUT OPTO-ISOLATOR	9	U35A, U35B, U36A, U36B, U37A, U37B, U38A, U38B, U48B
.....3	229-0158	IC,A/D AND MUX,SMD	3	U28, U29, U30
.....3	229-8255-001	IC,82C55A,PERIPH I/F,PLCC	4	U6, U7, U9, U39
.....3	231-0136	IC,VOLT REF,2.5V,8-PIN SOIC	1	D1
.....3	231-7905	VR,LM79L05AC,NEG VOLT,100mA,SMD	1	U46
.....3	340-0004	SW,JUMPER PROGRAMMABLE	18	P9, P10, P11, P15, P16, P17, P18, P19, P20, P21, P22, P23, P24, P25, P26, P27, P28, P29
.....3	342-3304	SW,TACT,SPST,N.O.,SMD,RECESSED	1	S1
.....3	350-2032	CELL,BATTERY,3V,190MAH,LITHIUM	1	

BOM LEVEL	PART NO.	DESCRIPTION	QTY	REF. DES.
.....3	390-0054	OSC,CRYSTAL,1.8432MHZ,SMD	1	U18
.....3	408-0050	HEADER,50-PIN,.100 CENTERS,SMD	2	J2, J8
.....3	408-0300	HEADER,3-PIN,.100 CENTERS,SIP,note	13	J9, J10, J16, J17, J18, J19, J20, J21, J22, J26, J27, J28, J29
.....3	408-1200	HEADER,12-PIN,.100 CENTERS,DIP,note	0.5	J23
.....3	408-6000	CONNECTOR, HEADER, 60 PIN, SMD	1	J7
.....3	413-1206	CHIP,TEST POINT,1206,SMD	2	TP1, TP2
.....3	415-2032	HOLDER,BATTERY FOR CR-2032,SMD	1	
.....3	417-0200	CONN,HEADER 20 PIN	1	J11, J12, J13, J15
.....3	417-2600	CONN,HEADER,26PIN	4	J3, J4, J5, J6
.....3	417-4042	RCPT,40POS,2ROW,PCB,SAMTEC	1	J1
.....3	420-2104	SCREW,2-56X.250,S.S. PH SC	2	
.....3	423-2003	#2 LOCK S.S. INT TOOTH WASHER	2	
.....3	431-1400	SOCKET,14-PIN,DIP,SMD	17	XU10, XU11, XU12, XU13, XU16, XU35, XU36, XU37, XU38, XU40, XU41, XU42, XU43, XU44, XU45, XU48, XU49
.....3	431-2800	SOCKET,28-PIN,PLCC,SMD	5	XU2, XU3, XU4, XU5, XU17
.....3	441-0198	STOFF,ALUM 5/32 HEX,.437"LG,#2-56"	1	
.....3	519-0531	PCB, MACH, SUPERVISOR	1	
.....3	979-0518-003	KIT,SOFTWARE,FM10S SUPERVISOR U3	1	U3
.....4	229-2210-2	IC,PAL ERASABLE	1	U3
.....3	979-0518-004	KIT,SOFTWARE,FM10S SUPERVISOR U4	1	U4
.....4	229-2210-2	IC,PAL ERASABLE	1	U4
.....3	979-0518-005	KIT,SOFTWARE,FM10S SUPERVISOR U5	1	U5
.....4	229-2210-2	IC,PAL ERASABLE	1	U5
.....3	979-0523-017	KIT, SOFTWARE, FM-10S SUPERVISOR U17	1	U17
.....4	229-2210-2	IC,PAL ERASABLE	1	U17
.....3	979-0526-002	KIT, SOFTWARE, FM-20S SUPERVISOR U2	1	U2
.....4	229-2210-2	IC,PAL ERASABLE	1	U2
....2	949-0425	ASSY,RIBBON CABLE,FM10S(NOTE) (SBCM)	1	
.....3	417-0180	CONN,FEM,10 PIN	1	
.....3	417-0181	CONN,MALE,9 PIN	9	
.....3	417-0228	CONN,50-PIN,FEMALE,TRANSITION	4	
.....3	417-3334	CONN, 60 PIN, RIBBON	2	
.....3	418-2600	CONN,26-PIN,RIBBON	4	
.....3	600-0002	RIBBON CBL,3580-10 ALPHA	2	
.....3	600-0026	CBL,FLAT,26-COND,28GA	0.9	
.....3	600-0050	CBL,RIBBON 50 COND 3365 SER.	1.6	
.....3	610-1184	CBL,60COND,28GA,ANSLEY	0.5	
....2	949-0426	ASSY,DC POWER & DATA CABLE, FM10S(SBCM)	1	
.....3	402-0051	TY-RAP, W/FLAG	32	
.....3	410-0004	LUG,COPPER,#2 3/8	8	
.....3	410-0005	LUG,COPPER #1/0 3/8	4	
.....3	410-0008	LUG,COPPER I/O WELD 1/4	4	

BOM LEVEL	PART NO.	DESCRIPTION	QTY	REF. DES.
.....3	410-1015	LUG,COPPER #2 1/4	8	
.....3	600-0001	WIRE,1/0,1057/30,300 AMP	13.87	
.....3	610-0206	CBL,AWG2 WELDING BLK NEOPRENE	30.02	
.....3	690-0221	TUB,BLK HEAT SHRINK 3/4	0.74	
.....3	690-0221-RED	TUB,RED,HEAT SHRINK, 0.75" 1.740 " "		
.....3	849-0901	CBL ASSY,COMPUTER,DB9-DB9,M/M,6FT	2	
.....3	849-0902	CBL ASSY,COMPUTER,DB9-DB9,M/F,6FT	4	
.....3	849-2501	CBL ASSY,COMPUTER,DB25-DB25 M/M,6FT	4	
.....3	849-2525	CBL,COMPUTER DATA,DB25-DB25 M/M,2FT	4	
.....3	849-3701	CBL ASSY,COMPUTER,DB37-DB37 M/F,3FT	1	
....2	949-0427	ASSY,WIRE HARNESS,FM10S (NOTE) (SBCM)	1	
.....3	402-0000	TY-RAP	40	
.....3	402-0051	TY-RAP, W/FLAG	9	
.....3	417-0053	SKT,CONN 641294-1 AMP	13	
.....3	417-0059	CONN,9 PIN 1-640521-0 AMP	1	
.....3	417-0138	HSNG,MOD IV 4 POS 87499-7 AMP	2	
.....3	417-0142	PIN,.050 DIA 26-22 745254-3	56	
.....3	417-0143	SKT,PIN .050 26-22 745253-3	44	
.....3	417-0224	KEYING PLUG MOD IV 87077 AMP	2	
.....3	417-0251	PLUG,25 PIN 207464-1 AMP	1	
.....3	417-0252	RCPT,25 POS 207463-1 AMP	2	
.....3	417-2510	KIT,BACKSHELL FOR 25PIN D CONN	3	
.....3	417-3710	KIT,BACKSHELL FOR 37PIN D CONN	1	
.....3	417-3711	CONN SHELL,37-PIN D,MALE	1	
.....3	417-8766	CONTACT,CRIMP,MOD-IV 87809-1	6	
.....3	418-0240	PLUG,FEM,4PIN	2	
.....3	601-2209	WIRE,AWG22,7/30 WHT	0.5	
.....3	608-0002	CBL,8 COND,SH,AWG 24,7/32	9.41	
.....3	610-8459	CBL,25 CONDUCTOR,AWG22,7/30	6.5	
.....3	611-0061	TUB,HT SHK CLEAR 3/64	1.5	
.....3	611-1250	TUB,HT SHK,1/8	0.334	
.....3	611-1875	TUB,HT SHK,3/16	0.25	
.....3	611-2500	TUB,HT SHK,1/4	0.6	
.....3	622-8444	WIRE,4COND,BELD 8444	19.7	
.....3	693-0002	SLVG,1/4 EXPANDO FR BLACK"	5	
.....3	693-0003	SLVG,1/2	1.475	
....2	949-0428	ASSY,RF CABLE,FM-10S (SBCM)	1	
.....3	417-0095	CONN,BNC RG/U142 31-326 AMPH	8	
.....3	417-0120	PLUG,STRAIGHT N	6	
.....3	418-0031	PLUG,N FOR RG-58/142B/U	2	
.....3	611-3750	TUB,HT SHK,3/8	0.4	
.....3	611-5000	TUB,HT SHK 1/2	0.25	
.....3	621-0001	CBL,COAX TEFLON RG 142B/U BELD	10.67	
.....3	621-1361	CBL,COAX,RG393/M17-127 50 OHM	6.75	
....2	949-0431	ASSY, CABLE, 10S, TX LINE GND 10IN	1	
.....3	410-1493	LUG,TERM #6 RECT 12-10 329697	1	
.....3	614-8474	CBL,BELD 8668	0.833	
....2	949-0517	HARNESS, FRONT PANEL, FM10S (SBCM)	2	
.....3	417-0003-001	HSNG,3 PIN 87499-5 AMP	2	P1, P2
.....3	417-8766	CONTACT,CRIMP,MOD-IV 87809-1	6	
.....3	601-2209	WIRE,AWG22,7/30 WHT	0.5	

BOM LEVEL	PART NO.	DESCRIPTION	QTY	REF. DES.
....2	959-0082-040	ASSY,DIRECTIONAL COUPLER,40DB	1	
....2	959-0082-045	ASSY,DIRECTIONAL COUPLER,45DB	2	
....2	959-0414-002	ASSY,LOW PASS FILTER,FM-10S	2	
.....3	402-0008	MTG DEVICE,FOR #6SCR,TIE CBL	1	
.....3	417-0016	CONN,BNC,RF,UG1094A/U,AMPHENOL	1	
.....3	420-6508	SCREW,6-32X.500,S.S. PH FH	14	
.....3	421-1113	RIV,CLOSED-END .125 X .316L	1	
.....3	421-6008	6-32 KEP NUT	2	
.....3	421-8002	8-32 HEX NUT, BRASS	2	
.....3	422-6106	SCREW,SEMS 6-32 X 3/8 PAN PH. ST."	4	
.....3	423-8006	#8 LOCK INT TOOTH	2	
.....3	471-0980-009	COVER,LOW PASS FILTER,(UNSCREENED)	1	
.....3	471-0981	SPACER,LOW PASS FILTER,FM3C	1	
.....3	471-0982	FRAME,LOW PASS FILTER,FM3C	1	
.....3	594-0039	LABEL,WARNING PS CAB	1	
.....3	919-0421-002	ASSY,PCB,LOW PASS FILTER, FM-10S	1	
.....4	003-2201	CAP,CER,MNLY,2.2pF,100V,0.25pF	2	C14, C15
.....4	003-2753	CAP,CER,27PF,100V,2%	1	C11,
.....4	003-6812	CAP,CER,68PF,50V,5%	1	C8,
.....4	042-3922	CAP,MICA,390PF,100V,5%	4	C9, C10, C12, C13,
.....4	100-1041	RES,1K OHM,1/4W,1%	1	R1
.....4	103-1062	RES,100K OHM,1/4W,1%,METAL	1	R5,
.....4	103-6654	RES,665K OHM,1/4W,1%,METAL	2	R2, R6,
.....4	122-1241	RES,124 OHM,2W,1%,METAL FILM	2	R3, R4
.....4	122-1581	RES,158 OHM,2W,1%,METAL FILM	2	R7, R8
.....4	177-1044	RES,TRMR,1K,25TURN,TOP ADJ	1	R9,
.....4	201-2800	DIODE,HOT CARRIER	2	D1, D2,
.....4	360-0145	COIL,L1,FM-1C LPF (SBCM)	1	L1,
.....5	640-1200	WIRE,12GA,MAGNET	0.035	
.....4	364-0023	COIL,MOLDED,.023UH,MILLER	1	L2,
.....4	417-0214	CONN,HEADER 20 PIN R.ANGLE	0.2	J23,
.....4	426-6000	PEM NUT,#6-32 KFS2-632	14	
.....4	426-8008	STUD,PEM,KFH-832-5ET,PCB MOUNT	2	
.....4	471-5035	INDUCTOR,LOW PASS FILTER,FM5C	1	
.....4	519-0421	LOW PASS FILTER,FM-3C	1	
.....4	601-0022	WIRE,AWG22,BUSS	0.2	
....2	959-0501	ASSY,8-WAY COMBINER A (LEFT),FM-10S (NOTE)	1	
.....3	402-0008	MTG DEVICE,FOR #6SCR,TIE CBL	2	
.....3	409-0123	SCR,POLYPRO,10-32x1-1/2,PAN HD,SLOT	7	
.....3	409-0124	NUT,ULTEM 2300(NATURAL) 10-32	1	
.....3	417-0017	RECP,BNC,BULKHEAD,UG-492A/U	2	
.....3	417-0392	RECP,N TYPE FEMALE,PANEL MT	8	
.....3	418-0035	ADPTR,JACK-JACK 82-66 AMPHENOL	2	
.....3	420-0302	SCREW,6-32X.250,BR PH SC	8	
.....3	420-4104	SCREW,4-40X.250,S.S. PH	4	
.....3	420-4114	SCREW,4-40X.875,S.S. PH	22	
.....3	420-6002	SCREW,6-32X.437,S.S. PH FH UC	5	
.....3	420-8121	SCREW,8-32X.375,BR PH	9	
.....3	421-0801	#10-32 BR HEX NUT	6	
.....3	421-1111	RIV,1/8X.422L .126-.187GR CLOS	2	
.....3	421-1113	RIV,CLOSED-END .125 X .316L	8	

BOM LEVEL	PART NO.	DESCRIPTION	QTY	REF. DES.
.....3	421-4008	4-40 KEP NUT	32	
.....3	421-6908	SHEET EDGE CONNECTOR 6-32	113	
.....3	422-6106	SCREW,SEMS 6-32 X 3/8 PAN PH. ST."	5	
.....3	422-6107	SCREW,SEMS 6-32 X 7/16 PAN PH.ST."	112	
.....3	423-1016	#6 LOCK INT TOOTH	8	
.....3	423-4002	#4 LOCK S.S. SPLIT	22	
.....3	423-6000	#6 FLAT .375 X .144 X .030	8	
.....3	423-8006	#8 LOCK INT TOOTH	9	
.....3	426-6000	PEM NUT,#6-32 KFS2-632	8	
.....3	441-0197	SPR, .46.002THK, POLYPROPYLENE"	13	
.....3	441-0199	STOFF,COMBINER,SUMO	1	
.....3	441-0210	SPACER,.300 .002 THK,NYLON 6/6"	44	
.....3	441-0593	STOFF,COMBINER,FM3C,.593LONG"	1	
.....3	471-5200	SHIELD,RELAY,8-WAY COMBINER,SUMO	4	
.....3	471-5201	CHANNEL,COIL,8-WAY COMBINER,SUMO	4	
.....3	471-5202	ANGLE,COIL,8-WAY COMBINER,SUMO	2	
.....3	471-5203	COVER,LEFT REAR,8-WAY COMBINER,SUMO	1	
.....3	471-5205	COVER,FRONT,8-WAY COMBINER,SUMO	1	
.....3	471-5206	PANEL,LEFT,8-WAY COMBINER,SUMO	1	
.....3	471-5207	PANEL,INSIDE,8-WAY COMBINER,SUMO	1	
.....3	471-5208	END,8-WAY COMBINER,SUMO	2	
.....3	471-5209	PARTITION,LEFT,8-WAY COMBINER,SUMO	1	
.....3	471-5210	STRAP,OUTPUT,8-WAY COMBINER,SUMO	1	
.....3	471-5218	ANGLE,OUTPUT STRAP,8-WAY COMBINER,S	1	
.....3	471-5246	CHANNEL,RELAY,8 WAY COMBINER,SUMO	2	
.....3	471-5247	CHANNEL,CRACK,SUMO	1	
.....3	519-0501	PCB,MACH,8-WAY CONBINER,FM-10S	1	
.....3	919-0502-001	PCB,ASSY,COMB INPUT,BTM LEFT,FM-10S	1	
.....4	003-1066	CAP,CER,MNLY,.1uF,50V,10% *NOTE*	9	C1, C2, C3, C4, C5, C6, C7, C8, C9
.....4	203-4005	DIODE,1N4005	4	D1, D2, D3, D4
.....4	270-1255	RELAY,PCB,SPST-NO, 12VDC	4	K1, K2, K3, K4
.....4	360-0158	COIL,COMBINER INPUT PCB,FM-10C	4	L1, L2, L3, L4
.....4	411-0001	FILTER,EMI 10,000PF 3PIN	5	FL1, FL2, FL3, FL4, FL5
.....4	417-1094	RECP,DB-9.STRAIGHT PCB MT	1	J1
.....4	420-4103	SCREW,4-40X.187,S.S. PH	2	
.....4	426-8010	STUD,PEM,KFH-440-4ET,PCB MOUNT	2	
.....4	441-8402	STOFF,ALUM 1/4HEX X 7/16 #4-40	2	
.....4	519-0502	PCB,MACH,COMBINER INPUT,FM-10S	1	
.....3	919-0502-002	PCB,ASSY,COMB INPUT,TOP LEFT,FM-10S	1	
.....4	003-1066	CAP,CER,MNLY,.1uF,50V,10% *NOTE*	9	C1, C2, C3, C4, C5B, C6B, C7B, C8B, C9B
.....4	203-4005	DIODE,1N4005	4	D1, D2, D3, D4
.....4	270-1255	RELAY,PCB,SPST-NO, 12VDC	4	K1, K2, K3, K4
.....4	360-0158	COIL,COMBINER INPUT PCB,FM-10C	4	L1, L2, L3, L4
.....4	411-0001	FILTER,EMI 10,000PF 3PIN	5	FL1B, FL2B, FL3B, FL4B, FL5B
.....4	417-1094	RECP,DB-9.STRAIGHT PCB MT	1	J1B
.....4	420-4103	SCREW,4-40X.187,S.S. PH	2	

BOM LEVEL	PART NO.	DESCRIPTION	QTY	REF. DES.
.....4	426-8010	STUD,PEM,KFH-440-4ET,PCB MOUNT	2	
.....4	441-8402	STOFF,ALUM 1/4HEX X 7/16 #4-40	2	
.....4	519-0502	PCB,MACH,COMBINER INPUT,FM-10S	1	
....2	959-0501-001	ASSY,8-WAY COMBINER B(RIGHT),FM-10S	1	
.....3	402-0008	MTG DEVICE,FOR #6SCR,TIE CBL	2	
.....3	409-0123	SCR,POLYPRO,10-32x1-1/2,PAN HD,SLOT	7	
.....3	409-0124	NUT,ULTEM 2300(NATURAL) 10-32	1	
.....3	417-0392	RECP,N TYPE FEMALE,PANEL MT	8	
.....3	420-0302	SCREW,6-32X.250,BR PH SC	8	
.....3	420-4104	SCREW,4-40X.250,S.S. PH	4	
.....3	420-4114	SCREW,4-40X.875,S.S. PH	22	
.....3	420-6002	SCREW,6-32X.437,S.S. PH FH UC	5	
.....3	420-8121	SCREW,8-32X.375,BR PH	9	
.....3	421-0801	#10-32 BR HEX NUT	6	
.....3	421-1111	RIV,1/8X.422L .126-.187GR CLOS	2	
.....3	421-1113	RIV,CLOSED-END .125 X .316L	8	
.....3	421-4008	4-40 KEP NUT	32	
.....3	421-6908	SHEET EDGE CONNECTOR 6-32	105	
.....3	422-6106	SCREW,SEMS 6-32 X 3/8 PAN PH. ST."	5	
.....3	422-6107	SCREW,SEMS 6-32 X 7/16 PAN PH.ST."	100	
.....3	423-1016	#6 LOCK INT TOOTH	8	
.....3	423-4002	#4 LOCK S.S. SPLIT	22	
.....3	423-6000	#6 FLAT .375 X .144 X .030	8	
.....3	423-8006	#8 LOCK INT TOOTH	9	
.....3	426-6000	PEM NUT,#6-32 KFS2-632	8	
.....3	441-0197	SPR, .46.002THK, POLYPROPYLENE"	13	
.....3	441-0199	STOFF,COMBINER,SUMO	1	
.....3	441-0210	SPACER,.300 .002 THK,NYLON 6/6"	44	
.....3	441-0593	STOFF,COMBINER,FM3C,.593LONG"	1	
.....3	471-5200	SHIELD,RELAY,8-WAY COMBINER,SUMO	4	
.....3	471-5201	CHANNEL,COIL,8-WAY COMBINER,SUMO	4	
.....3	471-5202	ANGLE,COIL,8-WAY COMBINER,SUMO	2	
.....3	471-5204	COVER,RIGHT REAR,8-WAY COMBINER,SUM	1	
.....3	471-5205	COVER,FRONT,8-WAY COMBINER,SUMO	1	
.....3	471-5207	PANEL,INSIDE,8-WAY COMBINER,SUMO	1	
.....3	471-5208	END,8-WAY COMBINER,SUMO	2	
.....3	471-5210	STRAP,OUTPUT,8-WAY COMBINER,SUMO	1	
.....3	471-5217	PARTITION,RIGHT,8-WAY COMBINER,SUMO	1	
.....3	471-5246	CHANNEL,RELAY,8 WAY COMBINER,SUMO	2	
.....3	471-5259	PANEL,RIGHT,8-WAY COMBINER,SUMO	1	
.....3	519-0501	PCB,MACH,8-WAY CONBINER,FM-10S	1	
.....3	919-0502-001	PCB,ASSY,COMB INPUT,BTM LEFT,FM-10S	1	
.....4	003-1066	CAP,CER,MNLY,.1uF,50V,10% *NOTE*	9	C1, C2, C3, C4, C5, C6, C7, C8, C9
.....4	203-4005	DIODE,1N4005	4	D1, D2, D3, D4
.....4	270-1255	RELAY,PCB,SPST-NO, 12VDC	4	K1, K2, K3, K4
.....4	360-0158	COIL,COMBINER INPUT PCB,FM-10C	4	L1, L2, L3, L4
.....4	411-0001	FILTER,EMI 10,000PF 3PIN	5	FL1, FL2, FL3, FL4, FL5
.....4	417-1094	RECP,DB-9.STRAIGHT PCB MT	1	J1
.....4	420-4103	SCREW,4-40X.187,S.S. PH	2	

BOM LEVEL	PART NO.	DESCRIPTION	QTY	REF. DES.
.....4	426-8010	STUD,PEM,KFH-440-4ET,PCB MOUNT	2	
.....4	441-8402	STOFF,ALUM 1/4HEX X 7/16 #4-40	2	
.....4	519-0502	PCB,MACH,COMBINER INPUT,FM-10S	1	
.....3	919-0502-002	PCB,ASSY,COMB INPUT,TOP LEFT,FM-10S	1	
.....4	003-1066	CAP,CER,MNLY,.1uF,50V,10% *NOTE*	9	C1, C2, C3, C4, C5B, C6B, C7B, C8B, C9B
.....4	203-4005	DIODE,1N4005	4	D1, D2, D3, D4
.....4	270-1255	RELAY,PCB,SPST-NO, 12VDC	4	K1, K2, K3, K4
.....4	360-0158	COIL,COMBINER INPUT PCB,FM-10C	4	L1, L2, L3, L4
.....4	411-0001	FILTER,EMI 10,000PF 3PIN	5	FL1B, FL2B, FL3B, FL4B, FL5B
.....4	417-1094	RECP,DB-9.STRAIGHT PCB MT	1	J1B
.....4	420-4103	SCREW,4-40X.187,S.S. PH	2	
.....4	426-8010	STUD,PEM,KFH-440-4ET,PCB MOUNT	2	
.....4	441-8402	STOFF,ALUM 1/4HEX X 7/16 #4-40	2	
.....4	519-0502	PCB,MACH,COMBINER INPUT,FM-10S	1	
....2	959-0502	ASSY,2-WAY COMBINER,FM-10S	1	
.....3	409-0123	SCR,POLYPRO,10-32x1-1/2,PAN HD,SLOT	29	
.....3	409-0124	NUT,ULTEM 2300(NATURAL) 10-32	9	
.....3	417-0321	CONN,N FEM BULKHD RECPT REAR MT PRE	1	
.....3	419-0034	CONN,OUTP COUPLING LOOP	1	
.....3	420-0083	SCREW,3/8-16X1.250,BR BOLT	1	
.....3	420-3005	SCREW,5/16-18X1.000,S.S. BOLT	6	
.....3	421-0801	#10-32 BR HEX NUT	20	
.....3	421-5000	3/8-16 .325 THICK STANDARD	1	
.....3	421-6008	6-32 KEP NUT	2	
.....3	421-6908	SHEET EDGE CONNECTOR 6-32	44	
.....3	421-8002	8-32 HEX NUT, BRASS	10	
.....3	422-6107	SCREW,SEMS 6-32 X 7/16 PAN PH.ST."	44	
.....3	423-1006	WASHER,FLAT,5/16 ZINC PLATED STEEL,.688 X .344 X .065	6	
.....3	423-1014	3/8 LOCK INT TOOTH (BRONZE)	1	
.....3	423-3000	5/16 LOCK SPLIT	6	
.....3	423-8006	#8 LOCK INT TOOTH	10	
.....3	426-8008	STUD,PEM,KFH-832-5ET,PCB MOUNT	10	
.....3	427-0001	FLANGE,3-1/8,301-014,MYAT	1	
.....3	441-0197	SPR, .46.002THK, POLYPROPYLENE"	29	
.....3	471-5219	SPACER PLATE,EDGE,10 KW COMBINER,SU	5	
.....3	471-5220	SPACER PLATE,END,10 KW COMBINER,SUM	2	
.....3	471-5221	TOP,10 KW COMBINER,SUMO	1	
.....3	471-5222	CHASSIS, 10 KW COMBINER, SUMO	1	
.....3	471-5223	COVER, 10 KW COMBINER, SUMO	1	
.....3	471-5224	STRAP,10 KW COMBINER,SUMO	2	
.....3	471-5225	STRAP, REJECT, 10 KW COMBINER, SUMO	1	
.....3	471-5226	STRAP, OUTPUT, 10 KW COMBINER, SUMO	1	
.....3	471-5227	STRAP, INPUT, 10 KW COMBINER, SUMO	2	
.....3	471-5270	PLATE, 10 KW COMBINER, SUMO	2	
.....3	471-5272	ANGLE,10 KW COMBINER,SUMO	1	
.....3	471-5274	PLATE,LARGE,10 KW COMBINER,SUMO	2	

BOM LEVEL	PART NO.	DESCRIPTION	QTY	REF. DES.
.....3	471-5275	PLATE,SMALL,10 KW COMBINER,SUMO	1	
....2	959-0504	ASSY,MOTHERBDS*SPLITTER,FM-10S	1	
.....3	402-0000	TY-RAP	12	
.....3	417-0105	ADAPT,PLUG-JACK ANGLE N UG27CU	1	
.....3	418-0035	ADPTR,JACK-JACK 82-66 AMPHENOL	1	
.....3	420-6105	SCREW,6-32X.312,S.S. PH	4	
.....3	421-0801	#10-32 BR HEX NUT	18	
.....3	421-1003	1/4-20 HEX NUT	6	
.....3	421-6008	6-32 KEP NUT	2	
.....3	421-6908	SHEET EDGE CONNECTOR 6-32	16	
.....3	422-6107	SCREW,SEMS 6-32 X 7/16 PAN PH.ST."	42	
.....3	423-0007	#10 LOCK INT TOOTH	18	
.....3	423-1003	1/4-20 LOCK SPLIT	6	
.....3	423-6002	#6 LOCK SPLIT	4	
.....3	469-0365	FINGER STOCK,1S197520A	80	
.....3	471-5235	SIDE,PA BAY,SUMO	2	
.....3	471-5236	HORIZONTAL PANEL,PA BAY,SUMO	2	
.....3	471-5249	BUSBAR,5 WAY,SUMO	2	
.....3	471-5250	BUSBAR,4 WAY,SUMO	2	
.....3	700-0200	TAPE,WEAR,1/2WIDE,.045"THK"	0.024	
.....3	959-0503	ASSY,IPA SPLITTER,FM-10S	1	
.....4	417-0321	CONN,N FEM BULKHD RECPT REAR MT PRE	1	
.....4	417-0392	RECP,N TYPE FEMALE,PANEL MT	3	
.....4	420-6205	SCREW,6-32X1.250,S.S. PH	9	
.....4	421-4008	4-40 KEP NUT	12	
.....4	421-6008	6-32 KEP NUT	9	
.....4	421-6908	SHEET EDGE CONNECTOR 6-32	22	
.....4	422-6107	SCREW,SEMS 6-32 X 7/16 PAN PH.ST."	4	
.....4	423-6002	#6 LOCK SPLIT	9	
.....4	441-0211	SPACER,.066 .001 THK, UTELM 1000"	9	
.....4	471-5214	CHASSIS,2-WAY SPLITTER,SUMO	1	
.....4	471-5215	COVER,2-WAY SPLITTER,SUMO	1	
.....5	471-5215-009	COVER,2-WAY SPLITTER,SUMO,UNSCREENED	1	
.....4	519-0503	PCB,MACH,IPA SPLITTER,FM-10S	2	
.....3	959-0504-001	ASSY,MOTHERBOARDS,FM10S	1	
.....4	131-5031	RES,100 OHM,250W,5%,BRAZED FLNG MNT	2	R109, R110
.....4	131-5032	RES,50 OHM,100W,5%,FLNG MNT	16	R101, R101, R102, R102, R103, R103, R104, R104, R105, R105, R106, R106, R107, 107, R108, R108
.....4	400-0014	GROMMET,3/8IDX5/8ODFOR7/16HOLE	1	
.....4	402-0833	CLAMP,CBL,1/4	2	
.....4	417-0044	CONN,10 PIN SINGLE ROW HEADER	2	J202, J202
.....4	417-0384	CONN,N" TYPE,MALE TO PIN, NO NUT"	3	J112, J112, J113
.....4	417-1253	RECP,DB-25,FILTERED,RT ANGLE PCB MT	4	J110, J111, J110, J111
.....4	418-3227	FEMALE SCREWLOCKS 207719-1 AMP	6	
.....4	420-4105	SCREW,4-40X.312,S.S. PH	12	

BOM LEVEL	PART NO.	DESCRIPTION	QTY	REF. DES.
.....4	420-4306	SCREW,4-40X.375,S.S. SHCS	32	
.....4	420-6108	SCREW,6-32X.500,S.S. PH	2	
.....4	421-4008	4-40 KEP NUT	12	
.....4	421-6008	6-32 KEP NUT	2	
.....4	421-6908	SHEET EDGE CONNECTOR 6-32	12	
.....4	422-6107	SCREW,SEMS 6-32 X 7/16 PAN PH.ST."	18	
.....4	423-4002	#4 LOCK S.S. SPLIT	8	
.....4	423-6002	#6 LOCK SPLIT	2	
.....4	454-0002	RING,COMPRESSION,H.V.S.S.	2	
.....4	471-5212	CHANNEL,MOTHERBOARD,SUMO	1	
.....4	471-5213	ANGLE,D" CONNECTORS,SUMO"	2	
.....4	919-0504	PCB,ASSY,MOTHERBOARD,FM-10S	2	
.....5	009-4710-001	CAP,CER CHIP,4.7PF,0.1 PF,500V (NOTE)	4	C131, C134, C135, C136
.....5	009-4713	CAP,CER CHIP,47PF,500V,5%	8	C123, C124, C125, C126, C127, C128, C129, C130
.....5	009-5610-001	CAP,CER CHIP,5.6PF,0.1 PF,500V (NOTE)	1	C133
.....5	009-6210-001	CAP,CER CHIP,6.2PF,0.1PF,500V (NOTE)	1	C137
.....5	009-7510-001	CAP,CER CHIP,7.5PF,0.1PF,500V (NOTE)	2	C132, C138
.....5	020-4770	CAP,LYTIC,47UF,63V,STDUP	9	C101, C103, C105, C107, C109, C111, C113, C115, C117
.....5	030-1053	CAP,MYLAR FILM,.1uF,100V,RAD	9	C102, C104, C106, C108, C110, C112, C114, C116, C118
.....5	402-0000	TY-RAP	3	
.....5	402-0008	MTG DEVICE,FOR #6SCR,TIE CBL	4	
.....5	417-3610	CONN,CARD EDGE,36 POS(18x2)BLK	9	J101, J102, J103, J104, J105, J106, J107, J108, J109
.....5	417-6310	CONN,ELEVATED SOCKET,10-PIN,SIP.635	1	J115
.....5	418-0255	CONN,MALE,4PIN	1	J114
.....5	421-4001	4-40 S.S. HEX NUT	4	
.....5	421-4008	4-40 KEP NUT	4	
.....5	423-6007	FLAT .250 X .150 X .065	4	
.....5	426-4003	NUT,PEM 4-40 KFS2-440	4	
.....5	426-4008	STOFF,PEM 4-40 KFSE-440-12	1	
.....5	426-6000	PEM NUT,#6-32 KFS2-632	2	
.....5	426-8010	STUD,PEM,KFH-440-4ET,PCB MOUNT	8	
.....5	519-0504	PCB,MACH,MOTHERBOARD,FM-10S	1	
.....5	519-0510-002	PCB,MACH,MOTHERBOARD SHIELD,FM-10S	1	
.....6	519-0510	PCB,MACH,MOTHERBOARD SHIELD, BREAKAWAY PCB, FM10S	0.985	
.....5	601-0022	WIRE,AWG22,BUSS	3.5	
.....5	693-0220	TUB,TEFLON,TW,AWG22 NTL	3.5	
.....5	919-0506	PCB,ASSY,RF INPUT,MOTHERBD, FM-10S	1	
.....6	009-4713	CAP,CER CHIP,47PF,500V,5%	1	C119
.....6	096-0011	CAP,TRMR,CER,5.5-18PF,350V,NPO	1	C120

BOM LEVEL	PART NO.	DESCRIPTION	QTY	REF. DES.
.....6	519-0506	PCB,MACH,RF INPUT,MOTHERBOARD,FM-10	1	
.....4	919-0510-001	PCB,ASSY,MBD DC CONNECTOR,FM-10S	2	
.....5	003-1066	CAP,CER,MNLY,.1uF,50V,10% *NOTE*	4	C201, C202, C203, C204
.....5	417-0200	CONN,HEADER 20 PIN	0.5	J202
.....5	417-1093	RECP,DB-9,FILTERED,RT ANGLE PCB MT	1	J201
.....5	519-0510-001	PCB,MACH,MBD DC CONN,FM-10S,BKAWAY	1	
.....6	519-0510	PCB,MACH,MOTHERBOARD SHIELD, BREAKAWAY PCB, FM10S	0.015	
.....4	919-0516-002	ASSY,PCB,TEMP SENSOR,HEATSINK	1	
.....5	003-1054	CAP,CER,MNLY,.1uF,50V,20%	4	C1, C4, C6, C7
.....5	040-4713	CAP,MICA,47PF,500V,5%	2	C3, C5
.....5	042-3922	CAP,MICA,390PF,100V,5%	2	C2, C8
.....5	100-1041	RES,1K OHM,1/4W,1%	2	R3, R5
.....5	100-1051	RES,10K OHM,1/4W,1%	1	R6
.....5	103-1021	RES,10 OHM,1/4W,1%,METAL	1	R1
.....5	103-4024	RES,4.02K OHM,1/4W,1%,METAL	1	R4
.....5	200-4733	DIODE,ZENER,1N4733A, 5%	1	D1
.....5	220-0035	IC,LM35DZ CELSIUS TEMP SENSOR	1	U2
.....5	220-0072	IC,OP-AMP,TLC072,BIMOS,SINGLE SUPPLY	1	U1
.....5	418-0255	CONN,MALE,4PIN	1	J1
.....5	519-0516-001	PCB,MACH,EXH AIR TEMP SENSOR	1	
.....6	519-0516	PCB,MACH,EXH AIR TEMP SENSOR BKAWAY	0.031	
.....4	949-0504	WIRE HARNESS ASSY, MOTHERBOARD (SBCM)	1	
.....5	402-0051	TY-RAP, W/FLAG	4	
.....5	417-0053	SKT,CONN 641294-1 AMP	6	
.....5	418-0034	PLUG,BNC DUAL CRIMP 1-227079-6	2	
.....5	418-0240	PLUG,FEM,4PIN	2	
.....5	611-1250	TUB,HT SHK,1/8	0.166	
.....5	621-1359	CBL,COAX,RG316/U,50 OHM	1.75	
.....5	622-8451	WIRE,BELD 8451,SHIELD,1PR	1	
....2	959-0506	ASSY,REJ LOAD,2WAY COMBINER,FM10S	1	
.....3	139-0200	RES,200 OHM,150W,10%,NON-IND,CER (Note)	4	
.....3	417-0321	CONN,N FEM BULKHD RECPT REAR MT PRE	1	
.....3	420-0521	SCREW,10-32X1-1/2,NYLON,RND HD	2	
.....3	420-8121	SCREW,8-32X.375,BR PH	14	
.....3	421-0102	10-32 KEP NUT	2	
.....3	421-4008	4-40 KEP NUT	2	
.....3	421-6002	6-32 BRSS HEX NUT	2	
.....3	421-6908	SHEET EDGE CONNECTOR 6-32	28	
.....3	422-6107	SCREW,SEMS 6-32 X 7/16 PAN PH.ST."	14	
.....3	423-6004	#6 LOCK SPLIT (BRONZE)	2	
.....3	423-8006	#8 LOCK INT TOOTH	8	
.....3	441-9404	STOFF,PAN-POLE	2	
.....3	471-5267	CHASSIS,REJECT LOAD,SUMO	1	
.....3	471-5268	END PANEL,REJECT LOAD,SUMO	2	
.....3	471-5269	ANGLE,REJECT LOAD,SUMO	2	

BOM LEVEL	PART NO.	DESCRIPTION	QTY	REF. DES.
.....3	471-5271	STRAP,INPUT,REJECT LOAD,SUMO	1	
....2	959-0507-002	ASSY, PWR SUPPLY BAY, 1 PH, 3W, 220V, FM10S	1	
.....3	140-0021	VARISTOR BLOCK, 275VRMS, 350VDC	6	MOV1, MOV1A, MOV3, MOV3A, MOV4, MOV4A
.....3	330-1000	FUSE,MDA 10A 250V SLO-BLO	2	
.....3	341-0075	CONTACTOR,125A,220/240VAC,50/60HZ	1	K1
.....3	341-0107	CKT BRKR 125A,ABB T3N125TW	1	
.....3	402-0008	MTG DEVICE,FOR #6SCR,TIE CBL	5	
.....3	402-0015	TIE,CBL,PANDUIT, 7 3/8 LONG"	10	
.....3	402-0839	CLAMP,CBL,5/8	3	
.....3	410-0030	LUG,1/4-MTG,1/0-6,SOLDERLESS	1	
.....3	412-0050	TERM BLOCK,GOULD 63133	1.333	TB2
.....3	412-0090	BARR STP,9 POS 7/16	1	TB1
.....3	415-0003	BLOCK,FUSE,2-POLE FUSEHOLDER	1	
.....3	420-0091	BOLT, 3/8-16 X 2 1/4 FULL THREAD	6	
.....3	420-0108	SCREW,10-32X.500,S.S. PHH	12	
.....3	420-0114	SCREW,10-32X.875,S.S.	2	
.....3	420-0817	ASSY,FEMALE SCREWLOCK 205817-1	8	
.....3	420-4106	SCREW,4-40X.375,S.S. PH	36	
.....3	420-4992	SCREW,4-40X.750,NY SL PAN HD SC	5	
.....3	420-6002	SCREW,6-32X.437,S.S. PH FH UC	6	
.....3	420-6108	SCREW,6-32X.500,S.S. PH	3	
.....3	420-8002	SCREW,8-32X3.000,S.S. PHH	2	
.....3	420-8106	SCREW,8-32X.375,S.S. PHH	8	
.....3	421-0102	10-32 KEP NUT	12	
.....3	421-0801	#10-32 BR HEX NUT	9	
.....3	421-1003	1/4-20 HEX NUT	3	
.....3	421-1113	RIV,CLOSED-END .125 X .316L	5	
.....3	421-4008	4-40 KEP NUT	12	
.....3	421-4901	#4 NYLON HEX NUT	5	
.....3	421-5000	3/8-16 .325 THICK STANDARD	12	
.....3	421-6008	6-32 KEP NUT	6	
.....3	421-6908	SHEET EDGE CONNECTOR 6-32	15	
.....3	421-8003	8-32 KEP NUT	3	
.....3	422-6106	SCREW,SEMS 6-32 X 3/8 PAN PH. ST."	26	
.....3	422-6107	SCREW,SEMS 6-32 X 7/16 PAN PH.ST."	16	
.....3	423-0001	WASHER,FLAT,#10 SST,.438 X .203 X .065	2	
.....3	423-0002	#10 LOCK SPLIT	4	
.....3	423-0007	#10 LOCK INT TOOTH	9	
.....3	423-1003	1/4-20 LOCK SPLIT	3	
.....3	423-4002	#4 LOCK S.S. SPLIT	36	
.....3	423-5000	WASH,FLAT,.385 ID,.75 OD,.125 THK BRASS	12	
.....3	423-5004	3/8 LOCK SPLIT (BRONZE)	12	
.....3	423-6002	#6 LOCK SPLIT	3	
.....3	423-8000	#10 FLAT .560 X .190 X .045	8	
.....3	423-8002	#8 LOCK SPLIT	8	
.....3	423-8007	#8 FLAT .375 X .175 X .030	3	
.....3	441-0201	BUSHING,DC FILTER,FM10S	6	
.....3	441-9404	STOFF,PAN-POLE	2	

BOM LEVEL	PART NO.	DESCRIPTION	QTY	REF. DES.
.....3	470-0353	AC HIGH/LOW LINE MONITOR WITH INDICATOR	1	
.....3	471-5231-100	HOOD,PS,FM10S WITH ABB Tmax	1	
.....3	471-5232	COVER,PS,SUMO	1	
.....3	471-5241	STRAP,MOV GND,SUMO	1	
.....3	471-5255	BUSBAR,PS,SUMO	2	
.....3	471-5256-100	COVER,CIR BRKR,FM10S WITH ABB Tmax	1	
.....3	471-5261-009	SUPPORT,PS,SUMO,UNSCREENED	1	
.....3	471-5262	AIR DAM,SMALL,SUMO	1	
.....3	471-5263	AIR DAM,MEDIUM,SUMO	1	
.....3	471-5264	AIR DAM,LARGE,SUMO	1	
.....3	471-5265	JOINER,MOV,SUMO	2	
.....3	471-5276	STRAP, MOV PAIR	1	
.....3	471-5277	GUARD,HIGH CURRENT,PS,FM10S	1	
.....3	471-5383	GUARD, AC ENTRY, FM10S	1	
.....3	471-5421	CHANNEL,TOROID MOUNTING,FM10S/FM20S	4	
.....3	486-2285	HANDLE,OVAL,BLK,10-32 X 4	2	
.....3	486-5500-500	SHAFT FOR ABB T3 BREAKERS,FM10S	1	
.....3	540-0015-012	PWR SPLY,80 WATT,UNIV INPUT,3 OUTS	1	PS7
.....3	594-0099	LABEL,WARNING HIGH CURRENT",1" X 1.5",VINYL,ADHESIVE BACKED"	1	
.....3	594-0501	LABEL,CE ELECTRICAL SYMBOLS	0.5	
.....3	594-0502	LABEL SHEET, FM10S/20S POWER SUPPLY BAY	1	
.....3	594-0503	LABEL, DANGER-HAZARDOUS VOLTAGE	1	
.....3	919-0096-001	ASSY PCB,OPTICALLY COUPLED REL NOTE	1	K2
.....4	000-1051	CAP,CER,DISC,.03UF,300VAC,20%	-1	REMOVE C3YOU MUST SCRAP THIS PART ON SCRAP REPORT AFTER REMOVAL!
.....4	110-5633	RES,560 OHM,1/2W,5%	-1	REMOVE R2YOU MUST SCRAP THIS PART ON SCRAP REPORT AFTER REMOVAL!
.....4	919-0096	ASSY PCB,OPTICALLY COUPLED REL (SBCM)	1	
.....5	000-1051	CAP,CER,DISC,.03UF,300VAC,20%	1	C3
.....5	002-1034	CAP,CER,DISC,.001UF,1000V	2	C1, C4
.....5	020-4773	CAP,LYTIC,47UF,35V,STDUP	1	C2
.....5	103-5112	RES,51.1 OHM,1/4W,1%,METAL	1	R4
.....5	110-5633	RES,560 OHM,1/2W,5%	1	R2
.....5	110-8233	RES,820 OHM,1/2W,5%	1	R3
.....5	130-2032	RES,2K OHM,10W,3%,WW	2	R1, R5
.....5	140-0023	VARISTOR,27V,V27ZA60	1	MOV1
.....5	200-5359	DIODE,ZENER,1N5359 24V 5W	1	D2
.....5	203-4005	DIODE,1N4005	2	D1, D4
.....5	229-0033	IC,OPTOIS,4N33	1	U1
.....5	239-0003	BRDG RECT,6PH20 EDI	1	D5

BOM LEVEL	PART NO.	DESCRIPTION	QTY	REF. DES.
.....5	270-0054	REL,PC 24V T90NID1224 P&B	1	K1
.....5	270-0054-001	COVER,DUST REL 35C620 P&B	1	
.....5	330-0055	FUSE,3A,250V,PCB MOUNT	2	F1, F2
.....5	410-0025	TERM,MALE DISCONNECT PC .25TAB	5	E1, E2, E3, E4, E5
.....5	417-0600	SKT,IC 6 PIN	1	XU1
.....5	420-2504	SCREW,2-56X.250,S.S. PH FH SC	4	
.....5	420-4104	SCREW,4-40X.250,S.S. PH	2	
.....5	421-2001	2-56 S.S. NUT	4	
.....5	423-2002	#2 LOCK SPLIT	4	
.....5	423-4002	#4 LOCK S.S. SPLIT	2	
.....5	474-0347	PLATE,SOLID STATE RELAY MOUNT	1	
.....5	519-0096	PCB,MACH,OPTICALLY COUPLED RELAY	1	
.....5	601-2209	WIRE,AWG22,7/30 WHT	0.75	
.....3	919-0511	ASSY,PCB,P.S. DIST.,FM-10S	1	
.....4	003-1054	CAP,CER,MNLY,.1uF,50V,20%	1	C1
.....4	100-1041	RES,1K OHM,1/4W,1%	1	R10
.....4	103-1021	RES,10 OHM,1/4W,1%,METAL	5	R1, R2, R3, R4, R5
.....4	103-1785	RES,17.8K OHM,1/4W,1%,(N)	1	R9
.....4	103-1825	RES,18.2K OHM,1/4W,1%,METAL	1	R8
.....4	132-2523	RES,25 OHM,5W,5%,WW	2	R11, R12
.....4	417-0700	CONN,PCB MT,2PIN	3	J7, J8, J9
.....4	417-0903	RCPT, 9 PIN D, FEMALE	2	J12, J13
.....4	417-1276	CONN,PCB,12 PIN	1	J11
.....4	417-2502	RCPT,25 PIN D, FEMALE	6	J1, J2, J3, J4, J5, J10
.....4	418-0255	CONN,MALE,4PIN	1	J6
.....4	420-0817	ASSY,FEMALE SCREWLOCK 205817-1	5	
.....4	519-0511	PCB,MACH,P.S. DIST.,FM-10S	1	
.....3	919-0516-001	ASSY,PCB,TEMP SENSOR,AIR FLOW	1	
.....4	003-1054	CAP,CER,MNLY,.1uF,50V,20%	4	C1, C4, C6, C7
.....4	040-4713	CAP,MICA,47PF,500V,5%	2	C3, C5
.....4	042-3922	CAP,MICA,390PF,100V,5%	2	C2, C8
.....4	100-1041	RES,1K OHM,1/4W,1%	2	R5, R3
.....4	100-1051	RES,10K OHM,1/4W,1%	1	R6
.....4	103-1021	RES,10 OHM,1/4W,1%,METAL	1	R1
.....4	103-4024	RES,4.02K OHM,1/4W,1%,METAL	1	R4
.....4	200-4733	DIODE,ZENER,1N4733A, 5%	1	D1
.....4	220-0035	IC,LM35DZ CELSIUS TEMP SENSOR	1	U2
.....4	220-0072	IC,OP-AMP,TLC072,BIMOS,SINGLE SUPPLY	1	U1
.....4	418-0255	CONN,MALE,4PIN	1	J1
.....4	519-0516-001	PCB,MACH,EXH AIR TEMP SENSOR	1	
.....5	519-0516	PCB,MACH,EXH AIR TEMP SENSOR BKAWAY	0.031	
.....3	919-0519-001	PCB,ASSY,DC FILTER (SBCM)	12	
.....4	009-1032	CAP,CER CHIP,1000PF,100V,5%	3	C1, C2, C3
.....4	426-4003	NUT,PEM 4-40 KFS2-440	3	
.....4	519-0519-001	PCB,MACH,DC FILTER	1	
.....5	519-0519	PCB,MACH,DC FILTER BREAKAWAY	0.083	
.....3	949-0227	WIRE HARNESS,POWER SUPPLY BAY,1PH,FM10S (SBCM)	1	
.....4	410-0074	SPLICE,PARALLEL #2 AMP 52748	2	
.....4	410-0076	PARALLEL SPLICE, AWG 2/0	2	

BOM LEVEL	PART NO.	DESCRIPTION	QTY	REF. DES.
.....4	410-4106	LUG,TERM, #10 RING UNINS #6 WIRE	2	
.....4	512-020	TERMINAL,NICHIFU TMDN #125-250-03FA TERMINAL	2	
.....4	601-1800-006	WIRE,AWG 18,STRANDED,LIGHT BLUE	1.66	
.....4	610-0201	CBL,AWG2,ST OIL RESIST BLACK UL	3.13	
.....4	610-0402	CBL,AWG 4 ST RED 600V	1.75	
.....3	949-0507-002	ASSY, POWER SUPPLY HARNESS, FM-10S (SBCM)	1	
.....4	364-3102-402	SHIELD BEAD	6	
.....4	402-0000	TY-RAP	15	
.....4	402-0015	TIE,CBL,PANDUIT, 7 3/8 LONG"	10	
.....4	402-0051	TY-RAP, W/FLAG	8	
.....4	410-0011	LUG,FEM-SPADE 16/14	2	
.....4	410-0050	LUG,TERM,10-12GA,FEMSPADE	1	
.....4	410-0051	LUG,TERM,14-16GA,FEMSPADE	4	
.....4	410-0065	LUG,TERM #6 RING CRIMP #22 AWG	2	
.....4	410-0067	LUG,FEM DISCONNECT 22-18 .230W	8	
.....4	410-1016	TERM LUG,SOLDER TYPE#6 1/4HOLE	1	
.....4	410-1421	LUG,QUICK DISCONNECT #18-22	5	
.....4	410-1553	LUG,TERM #10 RING CRIMP 16-22	2	
.....4	410-2478	CRIMP TERMINAL,AMP 640707-1	15	
.....4	417-0053	SKT,CONN 641294-1 AMP	24	
.....4	417-1300	HSNG,13-PIN,AMP 1-640250-3	1	
.....4	417-1305	HOUSING,5-PIN,AMP 640250-5	1	
.....4	417-6880-001	CONTACT,DUAL BEAM,10-12 AGW	15	
.....4	418-0240	PLUG,FEM,4PIN	2	
.....4	418-0670	HOUSING,CONN,6PIN FEM	1	
.....4	418-0701	CONN,HOUSING,2 PIN	2	
.....4	418-1271	CONN,HOUSING,12PIN	1	
.....4	418-6879-003	CONNECTOR,3 PIN,AMPINNERGY	5	
.....4	512-020	TERMINAL,NICHIFU TMDN #125-250-03FA TERMINAL	11	
.....4	601-0600	WIRE,AWG6,HYPALON,BELDEN 34406	0.34	
.....4	601-0600-054	CBL,AWG 6, STRANDED, GREEN/YELLOW	1.15	
.....4	601-1202	WIRE,AWG12 19/25 RED	21.83	
.....4	601-1202-006	WIRE,AWG 12,STRANDED,LIGHT BLUE	22.16	
.....4	601-1202-054	WIRE,AWG 12,STRANDED, GREEN/YELLOW	23.41	
.....4	601-1604	WIRE,AWG16, 19/29 YEL	15.7	
.....4	601-1604-006	WIRE,AWG 16,STRANDED,LIGHT BLUE	1	
.....4	601-1800	WIRE,AWG18 19/30 BLK	35	
.....4	601-1800-006	WIRE,AWG 18,STRANDED,LIGHT BLUE	2.29	
.....4	601-1800-054	WIRE,AWG 18,STRANDED,GREEN/YELLOW	18	
.....4	601-2209	WIRE,AWG22,7/30 WHT	21.58	
.....4	602-2202	WIRE,TW,AWG22,PVC INS,BLK/RED	3.5	
.....4	610-0019-363	CBL, 16-3, STRANDED, SHEILDED, BLK PVC	9.83	
.....4	611-3750	TUB,HT SHK,3/8	0.083	
.....4	611-5000	TUB,HT SHK 1/2	0.333	
.....4	693-0002	SLVG,1/4 EXPANDO FR BLACK"	28.27	
..1	909-1051-525	FX-50,EXCITER,220V,NICKEL GRAY	1	
....2	334-0150	FUSE,3AG,1.5 AMP,SLO-BLO	2	
....2	334-0300	FUSE,3AG,3A,125V,SLOW BLOW	-2	
....2	682-0001	CORD LINE,3 COND,DETACH 7.5FT	-1	

BOM LEVEL	PART NO.	DESCRIPTION	QTY	REF. DES.
....2	682-0003	CORD,PWR EUROPEAN RIGHT ANGLE, 6'	1	
....2	909-1051-425	FX-50 EXCITER 117V,NICKEL GRAY	1	
.....3	027-2200	CAP,LYTIC,22000UF,50V (NOTE)	1	
.....3	140-0008	VARISTOR,V250LA20A GE	2	
.....3	230-3502	RECT,ASSY,35A 200V	1	
.....3	330-1200	FUSE, 12A, 250V, CERAMIC, SLO-BLOW	1	
.....3	334-0100	FUSE,1A MDL SLO BLO 250V	2	
.....3	334-0300	FUSE,3AG,3A,125V,SLOW BLOW	1	
.....3	360-0003	FERRITE BEAD,.291 DIA	2	
.....3	360-6504	FUSE,LINE FILTER MOD,120/240V	1	
.....3	376-0050	XFMR,POWER, FX50 AM13377B	1	
.....3	380-4600	FAN,4 1/2	1	
.....3	380-5502	FILTER,FAN	1	
.....3	380-6307	FINGER GUARD,FAN,4.125 CENTERS	1	
.....3	400-0024	SHOCK MT,MODULATED OSC FX50	1	
.....3	402-0000	TY-RAP	11	
.....3	402-0008	MTG DEVICE,FOR #6SCR,TIE CBL	2	
.....3	402-0051	TY-RAP, W/FLAG	1	
.....3	407-0023	SHIELD,CAP FX30	1	
.....3	410-0057	LUG,TERM,#10 RING CRIMP14-16GA	1	
.....3	410-1421	LUG,QUICK DISCONNECT #18-22	1	
.....3	415-1010	FUSE CLIP,LITTLEFUSE,101002	2	
.....3	415-1011	FUSE CLIP,LITTLEFUSE,105002	1	
.....3	415-2012	FUSEHOLDER,PANEL MOUNT, 10A (NOTE)	2	
.....3	415-2012-020	FUSEHOLDER,PANEL MOUNT, 20A	1	
.....3	417-0016	CONN,BNC,RF,UG1094A/U,AMPHENOL	2	
.....3	417-0017	RECP,BNC,BULKHEAD,UG-492A/U	1	
.....3	417-0053	SKT,CONN 641294-1 AMP	9	
.....3	418-0670	HOUSING,CONN,6PIN FEM	1	
.....3	420-0108	SCREW,10-32X.500,S.S. PHH	2	
.....3	420-0817	ASSY,FEMALE SCREWLOCK 205817-1	1	
.....3	420-4105	SCREW,4-40X.312,S.S. PH	2	
.....3	420-4110	SCREW,4-40X.625,S.S. PH	4	
.....3	420-6104	SCREW,6-32X.250,S.S. PH	8	
.....3	420-6105	SCREW,6-32X.312,S.S. PH	14	
.....3	420-6108	SCREW,6-32X.500,S.S. PH	1	
.....3	420-6112	SCREW,6-32X.750,S.S. PH	2	
.....3	420-6605	SCREW,6-32X.312,S.S. PH FH UC	11	
.....3	420-8107	SCREW,8-32X.437,S.S. PHH	12	
.....3	420-8116	SCREW,8-32X.250,S.S. PH FLH UC	4	
.....3	421-1102	RIV,BLD,DOMED 3/32	2	
.....3	421-1113	RIV,CLOSED-END .125 X .316L	1	
.....3	421-4008	4-40 KEP NUT	8	
.....3	421-6001	6-32 S.S. HEX THIN NUT	7	
.....3	421-6008	6-32 KEP NUT	1	
.....3	421-8001	8-32 S.S. HEX NUT	8	
.....3	421-8028	NUT,JAM,1/2-28 UNEF-2B	5	
.....3	422-6106	SCREW,SEMS 6-32 X 3/8 PAN PH. ST."	12	
.....3	422-6107	SCREW,SEMS 6-32 X 7/16 PAN PH.ST."	1	
.....3	423-0001	WASHER,FLAT,#10 SST,.438 X .203 X .065	5	
.....3	423-0003	#10 LOCK INT TOOTH	2	
.....3	423-3004	5/16 LOCK INT TOOTH THIN	2	

BOM LEVEL	PART NO.	DESCRIPTION	QTY	REF. DES.
.....3	423-6002	#6 LOCK SPLIT	27	
.....3	423-6003	#6 LOCK INT TOOTH	6	
.....3	423-6011	#6 FLAT .310 X .160 X .030	4	
.....3	423-8001	#8 FLAT .375 X .170 X .025	7	
.....3	423-8002	#8 LOCK SPLIT	21	
.....3	423-8004	#8 LOCK EXT TOOTH	1	
.....3	423-9002	WASH,INT TOOTH,1/2	5	
.....3	441-0012	STOFF,#6-32 MALE-FEMALE 1/4	6	
.....3	441-8217	STOFF,ALUM 1/4HEX X 5/8 6-32	5	
.....3	453-6701	CAP,MTG,BRKT,MALLORY,VR12	1	
.....3	465-0090-101	ANGLE,UPPER FRT PNL,CE EXCITER	1	
.....3	465-0091-100	ANGLE,LOWER FRT PNL,FX50	1	
.....3	466-0093	ANGLE,FRONT PANEL MOUNT,FX50	2	
.....3	467-0178	BOOT,INSULATING FOR 360-6504	1	
.....3	467-1003	OVERLAY,FX50	1	
.....3	469-0365	FINGER STOCK,1S197520A	32	
.....3	469-0365-1	STRIP,RFI SHIELD	2	
.....4	469-0365	FINGER STOCK,1S197520A	2.75	
.....3	469-0366-1	STRIP,RFI SHIELD 1.25	4	
.....4	469-0366	FINGER STOCK (NOTE!!!!!)	1.25	
.....3	469-0366-2	STRIP,RFI SHIELD 4.25	6	
.....4	469-0366	FINGER STOCK (NOTE!!!!!)	4.25	
.....3	471-0360	COVER,AFC/PLL PCB FX50	1	
.....4	471-0360-009	COVER,AFC/PLL PCB UNSCREENED	1	
.....3	471-0584-100	COVER,TOP,FM250C/E	1	
.....3	471-0631	SHIELD,XFMR FX50	1	
.....3	471-0795	SHIELD,FRONT PANEL PCB,FX-50	1	
.....4	471-0795-009	SHLD,FRT PNL PCB,FX-50,UNSCRND	1	
.....3	471-0962-100	PANEL,REAR,FX-50E/FX-50,SCREENED	1	
.....3	471-5289-001	BRACKET,FUSE HOLDER,FX50,SCREENED	1	
.....4	471-5289	BRACKET,FUSE HOLDER,FX50,FM100,FM250,UNSCREENED	1	
.....3	471-6269-300	PANEL,STATUS,FX50,HD COLORS	1	
.....3	474-0300	PLATE,MODULATED OSC FX50	1	
.....3	486-0004	HANDLE 1 3/4	2	
.....3	486-0014	FERRULE,BLK,FOR .25 DIA HANDLE	4	
.....3	488-0010	LATCH,LO-PROFILE 27-10-501-50	2	
.....3	520-0034-100	CHASSIS,FX50/FX50E	1	
.....3	591-0001	PLATE,FCC ID	1	
.....3	594-0095	LABEL,1EC LINE RCPT 700-0152	1	
.....3	594-0250	LABEL,CAUTION,TOP COVER,FM EXC	1	
.....3	594-0500	LABEL,DANGER	1	
.....3	601-1802	WIRE,AWG18,19/30 RED (*NOTE)	0.25	
.....3	611-1250	TUB,HT SHK,1/8	0.01	
.....3	690-1200	TUB,BLK,PVC 105C,1/2	0.354	
.....3	700-0145	FILM,2 DOUBLE ADHESIVE #467	0.003	
.....3	919-0104	ASSY PCB,AFC/PLL	1	
.....4	000-3302	CAP,CER,DISC,3.3PF,1000V	1	C59
.....4	001-5004	CAP,CER,DISC,5PF,500V,NPO	4	C15, C16, C56, C57

BOM LEVEL	PART NO.	DESCRIPTION	QTY	REF. DES.
.....4	003-1054	CAP,CER,MNLY,.1uF,50V,20%	24	C1, C3, C5, C6, C7, C8, C10, C12, C13, C21, C24, C27, C32, C33, C39, C43, C51, C55, C58, C60, C61, C64, C66, C41
.....4	020-4793	CAP,LYTIC,4700UF,16V,LOW LEAK	1	C35
.....4	023-1076	CAP,LYTIC,10uF,50V,STDUP	5	C42, C68, C70, C72, C73
.....4	023-1084	CAP,LYTIC,100MFD,35V,STDUP,RAD	11	C4, C15, C22, C23, C25, C49, C50, C52, C53, C69, C71
.....4	024-1064	CAP,LYTIC,1UF,50V,RAD	1	C29
.....4	024-3364	CAP,LYTIC,3.3UF,50V,NP	1	C30
.....4	024-3374	CAP,LYTIC,33UF,35V,STDUP	1	C37
.....4	024-4764	CAP,LYTIC,4.7UF,50V,20%,STDUP	1	C28
.....4	030-1053	CAP,MYLAR FILM,.1uF,100V,RAD	1	C31
.....4	030-2253	CAP,MYLAR FILM,.22UF,100V,RAD	4	C34, C38, C48, C54
.....4	031-1043	CAP,MYLAR FILM,.01UF,100V,RAD	3	C9, C11, C40
.....4	031-2243	CAP,MYLAR FILM,.022UF,200V,RAD	1	C26
.....4	038-4753	CAP,PYST,.47UF,100V	1	C44
.....4	040-2422	CAP,MICA,240PF	3	C45, C46, C47
.....4	042-2531	CAP,MICA,2500PF,500V,1%	1	C62
.....4	042-3312	CAP,MICA,33PF,500V,5%	2	C65, C67
.....4	042-3922	CAP,MICA,390PF,100V,5%	6	C2, C17, C18, C19, C20, C36
.....4	042-5031	CAP,MICA,5000PF,500V,1%	1	C63
.....4	100-1031	RES,100 OHM,1/4W,1%,METAL	1	R22
.....4	100-1041	RES,1K OHM,1/4W,1%	7	R10, R42, R40, R44, R23, R84, R85
.....4	100-1051	RES,10K OHM,1/4W,1%	15	R6, R13, R37, R15, R16, R24, R46, R47, R48, R95, R75, R76, R50, R103, R67,
.....4	100-1111	RES,118 OHM,1/4W,1%	1	R32
.....4	100-1231	RES,121 OHM,1/4W,1%	3	R21, R97, R99
.....4	100-1551	RES,15K OHM,1/4W,1%	4	R25, R26, R27, R51
.....4	100-1731	RES,174 OHM,1/4W,1%	1	R59
.....4	100-2723	RES,27 OHM,1/4W,5%	1	R34
.....4	100-3031	RES,301 OHM,1/4W,1%	1	R57
.....4	100-3951	RES,39.2K OHM,1/4W,1%	1	R9
.....4	100-4773	RES,4.7MEG OHM,1/4W,5%	1	R43
.....4	100-5041	RES,4.99K OHM,1/4W,1%	4	R29, R30, R88, R90
.....4	100-5663	RES,560K OHM,1/4W,5%	1	R19
.....4	103-1007	RES,1 MEG OHM,1/4W,1%,METAL	8	R71, R72, R79, R77, R86, R89, R70, R78
.....4	103-1021	RES,10 OHM,1/4W,1%,METAL	1	R1
.....4	103-1062	RES,100K OHM,1/4W,1%,METAL	5	R17, R18, R64, R65, R66
.....4	103-1215	RES,12.1K OHM,1/4W,1%,METAL	1	R11
.....4	103-1331	RES,1.33K OHM,1/4W,1%,METAL	2	R98, R100
.....4	103-1375	RES,13.7K OHM,1/4W,1%,METAL	1	R101

BOM LEVEL	PART NO.	DESCRIPTION	QTY	REF. DES.
.....4	103-1504	RES,1.5K OHM,1/4W,1%,METAL	1	R28,
.....4	103-1745	RES,17.4K OHM,1/4W,1%,METAL	1	R82
.....4	103-1825	RES,18.2K OHM,1/4W,1%,METAL	1	R92
.....4	103-2213	RES,221 OHM,1/4W,1%,METAL	1	R33
.....4	103-2673	RES,267 OHM,1/4W,1%,METAL	5	R7, R14, R38, R93, R94
.....4	103-3014	RES,3.01K OHM,1/4W,1%,METAL	1	R83
.....4	103-3323	RES,332 OHM,1/4W,1%,METAL	2	R2, R8
.....4	103-3324	RES,3.32K OHM,1/4W,1%,METAL	2	R4, R5
.....4	103-3631	RES,365 OHM,1/4W,1%,METAL	1	R20
.....4	103-3836	RES,383K OHM,,1/4W,1%,METAL	1	R39
.....4	103-4361	RES,432K OHM,1/4W,1%,METAL	1	R53
.....4	103-4753	RES,475 OHM,1/4W,1%,METAL	2	R45, R61
.....4	103-4755	RES,47.5K OHM,1/4W,1%,METAL	1	R31
.....4	103-4951	RES,49.9K OHM,1/4W,1%,METAL	2	R36, R12
.....4	103-5112	RES,51.1 OHM,1/4W,1%,METAL	2	R3, R74
.....4	103-5113	RES,511 OHM,1/4W,1%,METAL	1	R49
.....4	103-5624	RES,5.62K OHM,1/4W,1%,METAL	1	R41
.....4	103-6193	RES,619 OHM,1/4W,1%,METAL	1	R87
.....4	103-6194	RES,6.19K OHM,1/4W,1%,METAL	2	R54, R62
.....4	103-6346	RES,634K OHM,1/4W,1%,METAL	1	R60
.....4	103-7326	RES,732K OHM,1/4W,1%,METAL	1	R58
.....4	103-7503	RES,750 OHM,1/4W,1%,METAL	1	R55
.....4	103-7541	RES,7.50K OHM,1/4W,1%,METAL	2	R68, R80
.....4	103-8255	RES,82.5K OHM,1/4W,1%,METAL	1	R35
.....4	103-8256	RES,825K OHM,1/4W,1%,METAL	1	R56
.....4	175-1034	RES,TRMR,1K,VERT ADJ	1	R63
.....4	177-5044	RES,TRMR,5K,VERT ADJ	3	R69, R81, R91
.....4	177-5054	RES,TRMR,50K,VERT ADJ	1	R52
.....4	200-0009	DIODE,ZENER,1N 4739A	2	D17, D19
.....4	203-4005	DIODE,1N4005	2	D16, D18
.....4	203-4148	DIODE,1N4148	7	D1, D2, D3, D4, D5, D6, D7,
.....4	211-3904	TSTR,2N3904	4	Q1, Q2, Q3, Q4
.....4	220-0317	VR,LM317LZ TO92	1	U6
.....4	220-4040	IC,MC14040B 12-BIT BINARY	1	U2
.....4	220-5151	IC,MC145151 SYNTHESIZER	1	U9
.....4	220-8658	IC,SP8658 PRESCALER,DIVIDE/20	1	U8
.....4	221-0072	AMP,OP,BIFET TLO72CP	1	U11
.....4	221-0358	AMP,DUAL OP,LM358	1	U13
.....4	221-5532-001	IC,NE-5532AN	4	U10, U14, U15, U16
.....4	226-0392	RES NETWORK, 10K	2	R73, R96
.....4	227-0317	VR,LM317T,LM317KC	1	U17
.....4	227-0337	VOLTAGE REGULATOR,3 TERM, NEG	1	U18
.....4	228-0290	IC, 74LS90N (N)	1	U1
.....4	228-4013	IC,MC14013B	1	U4
.....4	228-4073	IC,MC14073B	1	U3
.....4	228-4538	IC,MC14538B NATL SEMICONDUCTOR	2	U5, U12
.....4	323-7345	LDR,LED TYPE,VACTEC VTL 5C2	3	LDR1, LDR2, LDR3
.....4	323-9224	IND,LED,GRN,521-9270	5	DS1, DS2, DS3, DS4, DS5
.....4	340-0002	SW,4 POS,SPST,8-PIN DIP	3	S1, S2, S3

BOM LEVEL	PART NO.	DESCRIPTION	QTY	REF. DES.
.....4	340-0004	SW,JUMPER PROGRAMMABLE	5	P3, P4, P5A, P5B, P10
.....4	360-2200	CHOKE,RF 2.2UH 550MA	2	L1, L2
.....4	364-0047	COIL, MOLDED .47UH	1	L3
.....4	370-0002	XMFR,RF,MCL,T4-1 (NOTE)	1	T1
.....4	390-0001	OSC,XTAL PC MT TCXO 10MHZ	1	Y1
.....4	402-0000	TY-RAP	2	
.....4	407-0074	SPR,LED .25 ODX.147 1D X.22L	5	
.....4	413-1597	TERM,TURRET,2 SHLDR,.219,GOLD FLASH	5	
.....4	417-0003	CONN,HEADER 3 PIN	3	J3.J4, J10
.....4	417-0004	JACK,TEST,RIGHT ANGLE PC MT	1	TP1
.....4	417-0200	CONN,HEADER 20 PIN	2	J5, J8, J2, J1,
.....4	417-0804	SOCKET,8-PIN DIP,BURNDY	6	XU10, XU11, XU13, XU14, XU15, XU16
.....4	417-1404	SOCKET,14-PIN DIP	3	XU1, XU3, XU4
.....4	417-1604	SKT,16-PIN,DIP	5	XU2, XU5, XU12, XR73, XR96
.....4	417-2804	SOCKET,IC 28-PIN,DIP,HI RELIABILITY	1	XU9
.....4	420-6104	SCREW,6-32X.250,S.S. PH	2	
.....4	423-6002	#6 LOCK SPLIT	2	
.....4	426-6000	PEM NUT,#6-32 KFS2-632	6	
.....4	519-0104	PCB,BLANK,AFC/PLL (scan)	1	
.....4	700-0148	TAPE,JOINING 3/4	0.001	
.....4	949-1050-001	ASSY, CABLE, AFC-PLL (SBCM)	1	
.....5	402-0051	TY-RAP, W/FLAG	1	
.....5	418-0034	PLUG,BNC DUAL CRIMP 1-227079-6	1	
.....5	621-1359	CBL,COAX,RG316/U,50 OHM	1.25	
.....5	690-0023	TUB,PVC105/7 BLK,ALPHA	1.25	
.....3	919-0107	ASSY PCB,P.S./CNTL	1	
.....4	001-1014	CAP,CER,DISC,10pF,1KV,10%,NPO	2	C3, C4
.....4	003-1054	CAP,CER,MNLY,.1uF,50V,20%	9	C5, C6, C7, C16, C25, C28, C30, C33, C37
.....4	014-1084	CAP,LYTIC,100UF,50V,INS	1	C15
.....4	014-1094	CAP,LYTIC,1000UF,50V,INS	2	C24, C29
.....4	023-1076	CAP,LYTIC,10uF,50V,STDUP	1	C17
.....4	023-1084	CAP,LYTIC,100MFD,35V,STDUP,RAD	6	C26, C27, C31, C32, C35, C36
.....4	024-1064	CAP,LYTIC,1UF,50V,RAD	2	C11, C23
.....4	024-2274	CAP,LYTIC,22UF,100V,STDUP	1	C34
.....4	030-1033	CAP,CER MOLDED,.001UF,200V,10%	2	C12, C20
.....4	031-1043	CAP,MYLAR FILM,.01UF,100V,RAD	2	C8, C10
.....4	040-5013	CAP,MICA,50PF,500V,5%	1	C13
.....4	042-3922	CAP,MICA,390PF,100V,5%	5	C1, C2, C14, C18, C19
.....4	100-1013	RES,1 OHM,1/4W,5%	1	R64
.....4	100-1031	RES,100 OHM,1/4W,1%,METAL	1	R72
.....4	100-1041	RES,1K OHM,1/4W,1%	7	R6, R73, R61, R37, R12, R50, R59
.....4	100-1051	RES,10K OHM,1/4W,1%	10	R4, R8, R30, R28, R32, R33, R42, R43, R55, R65

BOM LEVEL	PART NO.	DESCRIPTION	QTY	REF. DES.
.....4	100-1231	RES,121 OHM,1/4W,1%	2	R76, R78
.....4	100-1551	RES,15K OHM,1/4W,1%	3	R15, R24, R22
.....4	100-1841	RES,1.82K OHM,1/4W,1%	6	R77, R79, R1, R2, R36, R11
.....4	103-1007	RES,1 MEG OHM,1/4W,1%,METAL	5	R21, R34, R44, R45, R87
.....4	103-1021	RES,10 OHM,1/4W,1%,METAL	2	R60, R51
.....4	103-1062	RES,100K OHM,1/4W,1%,METAL	5	R3, R7, R23, R47, R41
.....4	103-1215	RES,12.1K OHM,1/4W,1%,METAL	1	R14
.....4	103-1261	RES,121K OHM,1/4W,1%,METAL	2	R82, R86
.....4	103-1504	RES,1.5K OHM,1/4W,1%,METAL	1	R10
.....4	103-1561	RES,150K OHM,1/4W,1%,METAL	1	R31
.....4	103-2212	RES,22.1 OHM,1/4W,1%,METAL	1	R54
.....4	103-2241	RES,2.21K OHM,1/4W,1%,METAL	1	R39
.....4	103-3324	RES,3.32K OHM,1/4W,1%,METAL	1	R29
.....4	103-3325	RES,33.2K OHM,1/4W,1%,METAL	3	R35, R40, R48
.....4	103-3631	RES,365 OHM,1/4W,1%,METAL	1	R75
.....4	103-3924	RES,3.92K OHM,1/4W,1%,METAL	2	R16, R18
.....4	103-4755	RES,47.5K OHM,1/4W,1%,METAL	8	R38, R85, R80, R81, R83, R84, R26, R57
.....4	103-5141	RES,5.11K OHM,1/4W,1%,METAL	2	R13, R49
.....4	103-6194	RES,6.19K OHM,1/4W,1%,METAL	2	R17, R19
.....4	103-6346	RES,634K OHM,1/4W,1%,METAL	1	R46
.....4	103-6813	RES,681 OHM,1/4W,1%,METAL	1	R53
.....4	103-6814	RES,6.81K OHM,1/4W,1%,METAL	1	R20
.....4	110-2233	RES,220 OHM,1/2W,5%	1	R56
.....4	132-0114	RES,1.5 OHM,10W,5%,WW	1	R74
.....4	132-2003	RES,.2 OHM,5W,5%,WW	4	R70, R71, R62, R63
.....4	140-0018	VARISTOR,V477A1 47V	1	MOV1
.....4	178-1054	RES,TRMR,10K,HORZ ADJ	1	R25
.....4	178-2044	RES,TRMR,2K,HORZ ADJ	2	R5, R27
.....4	178-5044	RES,TRMR,5K,HORZ ADJ	1	R9
.....4	178-5046	RES,TRMR,5K,1/2W,MT	1	R52
.....4	200-0015	DIODE,ZENER,15V,1W,1N4744A	1	D27
.....4	200-0027	DIODE,ZENER,1N4750A,27V	1	D5
.....4	200-4751	DIODE,ZENER,IN4751A 30V 1W	1	D6
.....4	201-4728	DIODE,ZENER,1N4728	2	D29, D30
.....4	202-0502	RECT,3A,200V,IN5402	1	D18
.....4	203-4005	DIODE,1N4005	14	D13, D14, D16, D17, D19, D20, D12, D15, D21, D22, D23, D24, D25, D26
.....4	203-4148	DIODE,1N4148	8	D1, D2, D3, D4, D8, D11, D28, D31
.....4	210-3906	2N3906 PNP 40V 2A .35W 250MHZ	2	Q3, Q5
.....4	211-3904	TSTR,2N3904	2	Q4, Q2
.....4	221-0358	AMP,DUAL OP,LM358	3	U1, U2, U3
.....4	227-0317	VR,LM317T,LM317KC	1	U5
.....4	227-0337	VOLTAGE REGULATOR,3 TERM, NEG	1	U6
.....4	227-0723	IC,VR,UA723	1	U4
.....4	237-0007	SCR,25A,100V,2N6505	1	D7

BOM LEVEL	PART NO.	DESCRIPTION	QTY	REF. DES.
.....4	330-0802	FUSE,FAST ACTING,8A,GBB-8,BUSS	1	F1
.....4	340-0004	SW,JUMPER PROGRAMMABLE	1	P22
.....4	345-0863	SW,SLD,DPDT,SWCFT C56206L2	3	S1, S2, S3
.....4	360-0003	FERRITE BEAD,.291 DIA	2	
.....4	407-0141	COVER,FUSE,STD 840836 RICHCO	1	
.....4	413-0025	TERM,TURRET,2 SHLDR,.360,GOLD FLASH	8	E1, E2, E3, E4, E5, E6, E7, E8,
.....4	413-0106	TERM,TEST POINT,OVAL,RED	8	TP1, TP2, TP3, TP4, TP5, TP6, TP7, TP8
.....4	415-2068	CLIP,FUSE,15AMP,LITTLEFUSE,102071	2	XF1, XF2
.....4	417-0003	CONN,HEADER 3 PIN	1	J22
.....4	417-0169	CONN 15 PIN 640503-1 AMP	1	J11
.....4	417-0200	CONN,HEADER 20 PIN	2	J12, J13, J23,
.....4	417-0804	SOCKET,8-PIN DIP,BURNDY	3	XU1, XU2, XU3
.....4	417-1404	SOCKET,14-PIN DIP	1	XU4
.....4	418-0900	CONN,9 PIN 640501-5 AMP	1	J10
.....4	420-6105	SCREW,6-32X.312,S.S. PH	3	
.....4	423-6002	#6 LOCK SPLIT	3	
.....4	426-6000	PEM NUT,#6-32 KFS2-632	3	
.....4	455-7805	HEATSINK,TO-220PKG,LOW PROFILE	2	
.....4	519-0107-001	PCB,MACH,P.S./CNTL,FM-100C (scan)	1	
.....3	919-0108	ASSY PCB,METERING	1	
.....4	001-5004	CAP,CER,DISC,5PF,500V,NPO	2	C8, C11
.....4	003-1054	CAP,CER,MNLY,.1uF,50V,20%	35	C2, C3, C4, C9, C10, C15, C17, C18, C19, C21, C22, C24, C27, C28, C30, C31, C34, C35, C36, C37, C38, C39, C40, C41, C42, C43, C44, C45, C50, C52, C54, C56, C57, C61, C63
.....4	020-1085	CAP,LYTIC,100UF,50V,STDUP,NP	1	C1
.....4	023-1076	CAP,LYTIC,10uF,50V,STDUP	9	C12, C32, C33, C51, C53, C55, C58, C60, C62
.....4	023-1084	CAP,LYTIC,100MFD,35V,STDUP,RAD	4	C46, C47, C48, C49
.....4	024-2274	CAP,LYTIC,22UF,100V,STDUP	1	C59
.....4	030-4743	CAP,POLYESTER FILM,.047UF,100V,RAD	1	C29
.....4	031-1043	CAP,MYLAR FILM,.01UF,100V,RAD	1	C13
.....4	040-5013	CAP,MICA,50PF,500V,5%	1	C26
.....4	042-3312	CAP,MICA,33PF,500V,5%	1	C14
.....4	042-3922	CAP,MICA,390PF,100V,5%	6	C6, C7, C16, C20, C23, C25
.....4	100-1041	RES,1K OHM,1/4W,1%	13	R18, R20, R98, R99, R100, R101, R102, R103, R104, R105, R106, R107, , R16
.....4	100-1051	RES,10K OHM,1/4W,1%	15	R1, R3, R23, R19, R29, R38, R42, R52, R60, R66, R67, R68, R69, R70, R71,

BOM LEVEL	PART NO.	DESCRIPTION	QTY	REF. DES.
.....4	100-1083	RES,10MEG OHM,1/4W,5%	1	R26
.....4	100-1111	RES,118 OHM,1/4W,1%	1	R110
.....4	100-1231	RES,121 OHM,1/4W,1%	5	R78, R80, R82, R88, R108
.....4	100-1873	RES,1.8MEG OHM,1/4W,5%	1	R59
.....4	100-2041	RES,2K OHM,1/4W,1%	1	R40
.....4	100-2283	RES,22MEG OHM,1/4W,5%	2	R21, R37
.....4	100-3051	RES,30.1K OHM,1/4W,1%	1	R55
.....4	100-6031	RES,604 OHM,1/4W,1%	1	R89
.....4	100-7132	RES,715 OHM,1/4W,1%	1	R13
.....4	103-1007	RES,1 MEG OHM,1/4W,1%,METAL	3	R9, R39, R54,
.....4	103-1021	RES,10 OHM,1/4W,1%,METAL	3	R33, R34, R36
.....4	103-1062	RES,100K OHM,1/4W,1%,METAL	8	R5, R31, R53, R64, R65, R87, R97, R111
.....4	103-1105	RES,11K OHM,1/4W,1%,METAL	1	R14
.....4	103-1214	RES,1.21K OHM,1/4W,1%,METAL	3	R90, R92, R94
.....4	103-1274	RES,1.27K OHM,1/4W,1%,METAL	1	R15
.....4	103-1331	RES,1.33K OHM,1/4W,1%,METAL	2	R79, R81
.....4	103-1504	RES,1.5K OHM,1/4W,1%,METAL	2	R47, R25
.....4	103-1695	RES,16.9K OHM,1/4W,1%,METAL	1	R48
.....4	103-1826	RES,182K OHM,1/4W,1%,METAL	1	R58
.....4	103-1914	RES,1.91K OHM,1/4W,1%,METAL	1	R12
.....4	103-2003	RES,200 OHM,1/4W,1%,METAL	2	R75, R76
.....4	103-2264	RES,2.26K OHM,1/4W,1%,METAL	1	R109
.....4	103-2673	RES,267 OHM,1/4W,1%,METAL	1	R63
.....4	103-2675	RES,26.7K OHM,1/4W,1%,METAL	3	R22, R84, R86
.....4	103-2751	RES,27.4K OHM,1/4W,1%,METAL	1	R45
.....4	103-3061	RES,301K OHM,1/4W,1%,METAL	1	R24
.....4	103-3631	RES,365 OHM,1/4W,1%,METAL	1	R83
.....4	103-4741	RES,4.75K OHM,1/4W,1%,METAL	1	R43
.....4	103-4755	RES,47.5K OHM,1/4W,1%,METAL	5	R57, R61, R62, R85, R96
.....4	103-4993	RES,499 OHM,1/4W,1%,METAL	6	R6, R91, R93, R95, R7, R8
.....4	103-4996	RES,499K OHM,1/4W,1%,METAL	1	R10
.....4	103-5112	RES,51.1 OHM,1/4W,1%,METAL	2	R77, R112
.....4	103-5141	RES,5.11K OHM,1/4W,1%,METAL	1	R35
.....4	103-5363	RES,536 OHM,1/4W,1%,METAL	1	R11
.....4	103-5364	RES,5.36K OHM,1/4W,1%,METAL	2	R2, R4
.....4	103-6193	RES,619 OHM,1/4W,1%,METAL	3	R72, R73, R74
.....4	103-8254	RES,8.25K OHM,1/4W,1%,METAL	1	R30
.....4	103-8255	RES,82.5K OHM,1/4W,1%,METAL	1	R27
.....4	103-8453	RES,845 OHM,1/4W,1%,METAL	4	R44, R46, R49, R51
.....4	103-8454	RES,8.45K OHM,1/4W,1%,METAL	1	R50
.....4	103-9314	RES,9.31K OHM,1/4W,1%,METAL	1	R17
.....4	177-1054	RES,TRMR,10K,VERT ADJ	1	R56
.....4	177-2044	RES,TRMR,2K,VERT ADJ	1	R41
.....4	177-2054	RES,TRMR,20K,VERT ADJ	1	R28
.....4	200-4733	DIODE,ZENER,1N4733A, 5%	1	D14
.....4	200-4742	DIODE,ZENER,1N4742A	2	D18, D19
.....4	200-5363	DIODE,ZENER,IN5363 30V SW	1	D25
.....4	201-2800	DIODE,HOT CARRIER	3	D3, D4, D24

BOM LEVEL	PART NO.	DESCRIPTION	QTY	REF. DES.
.....4	203-4005	DIODE,1N4005	3	D20, D21, D23
.....4	203-4148	DIODE,1N4148	15	D1, D2, D5, D6, D7, D8, D9, D10, D11, D12, D13, D15, D16, D17, D22
.....4	210-0271	TSTR,FET J271	1	Q7
.....4	210-3906	2N3906 PNP 40V 2A .35W 250MHZ	3	Q3, Q4, Q5
.....4	211-3904	TSTR,2N3904	3	Q1, Q2, Q6
.....4	220-0317	VR,LM317LZ TO92	1	U17
.....4	220-7136	A/D,3-1/2 DIGIT LCD,ICL7136CPL	1	U7
.....4	221-0074	AMP,OP,BIFET TLO74CW	2	U1, U2
.....4	221-4227	AMP,DUAL OP	2	U4, U5
.....4	225-0004	IC,CD4066BE	2	U3, U6
.....4	226-0392	RES NETWORK, 10K	1	R32
.....4	226-2004	MC1416,ULN2004 7-DRLNGTNS DP16	1	U12
.....4	227-0317	VR,LM317T,LM317KC	2	U14, U22
.....4	227-0337	VOLTAGE REGULATOR,3 TERM, NEG	2	U15, U16
.....4	228-4028	IC,MC14028B	1	U11
.....4	228-4071	IC,MC14070 QUAD EXCLUSIVE OR	1	U13
.....4	228-4076	IC,MC14076 QUAD REGISTER	1	U10
.....4	228-4532	IC,MC14532B 8-BIT PRIOR ENCOD	1	U9
.....4	228-4538	IC,MC14538B NATL SEMICONDUCTOR	1	U8
.....4	229-0555	IC,TIMER,NE555N	1	U18
.....4	229-3914	DRIVER,DOT/BAR DISPLAY LM3914N	3	U19, U20, U21
.....4	320-0016	LED,GRN PANEL INDICATOR	7	DS2, DS3, DS4, DS5, DS18, DS19, DS20
.....4	320-0017	LED,RED MV57173 I OR H	9	DS1, DS6, DS7, DS8, DS13, DS14, DS15, DS16, DS17
.....4	320-0021	DISP,LCD,4-DIGIT,0.7	1	DS12
.....4	320-4164	LED ARRAY,GRN,10 BAR	2	DS9, DS10
.....4	320-7164	LED ARRAY RED MV57164 INTEN G OR H	1	DS11
.....4	340-0107	KEYSWITCH,SI20601H1 SECME (NOTE)	6	S1, S2, S3, S4, S5, S6
.....4	402-0000	TY-RAP	1	
.....4	413-1597	TERM,TURRET,2 SHLDR,.219,GOLD FLASH	7	E1, TP1, TP2, TP3, TP4, TP5, TP6
.....4	417-0172	SKT, 20 PIN SINGLE ROW,SAMTEC	2	
.....4	417-0200	CONN,HEADER 20 PIN	1	J14
.....4	417-0804	SOCKET,8-PIN DIP,BURNDY	3	XU4, XU5, XU18
.....4	417-1404	SOCKET,14-PIN DIP	5	XU1, XU2, XU3, XU6, XU13
.....4	417-1604	SKT,16-PIN,DIP	6	XU8, XU9, XU10, XU11, XU12, XR32
.....4	417-1804	SOCKET,18-PIN,DIP,HIGH RELIABILITY	3	XU19, XU20, XU21
.....4	417-4005	SOCKET,40-PIN,DIP,HIGH RELIABILITY	1	XU7
.....4	420-6104	SCREW,6-32X.250,S.S. PH	4	
.....4	423-6002	#6 LOCK SPLIT	5	
.....4	426-6000	PEM NUT,#6-32 KFS2-632	5	
.....4	449-0006	TEST CLIP,COILED	1	
.....4	519-0108	PCB,BLANK,METERING (scan)	1	

BOM LEVEL	PART NO.	DESCRIPTION	QTY	REF. DES.
.....3	919-0190	ASSY,PCB,FM EXITER INTERFACE	1	
.....4	103-5141	RES,5.11K OHM,1/4W,1%,METAL	1	R1
.....4	340-0004	SW,JUMPER PROGRAMMABLE	1	P3Replaced 417-0309 on 06/21/2007 12:49:19
.....4	412-1600	BARR STP,16 POS,BEAU	1	J2
.....4	417-0003	CONN,HEADER 3 PIN	1	J3
.....4	417-2503	RCPT,25 PIN D, MALE	1	J1
.....4	519-0190	PCB,MACH,FM EXCITER INTERFACE	1	
.....3	919-0445	ASSY,PCB,RFI FILTER (SBCM)	1	
.....4	002-1034	CAP,CER,DISC,.001UF,1000V	3	C301, C302, C303
.....4	003-1054	CAP,CER,MNLY,.1uF,50V,20%	8	C304, C305, C306, C307, C308, C309, C310, C311
.....4	031-2033	CAP,MYLAR FILM,.0022uF,100V,10%	2	C312, C313,
.....4	038-4750	CAP,POLY,.47MFD,50V,10% OR BETTER	2	C324, C325
.....4	040-1022	CAP,MICA,100PF,500V,RAD	10	C314, C316, C318, C320, C322, C326, C327, C328, C329, C330
.....4	047-1035	CAP,FIL,EMI SUPPR,1000pF,3-PIN	3	FL312, FL313, FL319
.....4	100-1041	RES,1K OHM,1/4W,1%	3	R302, R306, R307,
.....4	100-1051	RES,10K OHM,1/4W,1%	1	R303,
.....4	100-6031	RES,604 OHM,1/4W,1%	1	R308,
.....4	103-5112	RES,51.1 OHM,1/4W,1%,METAL	2	R310, R311
.....4	103-8254	RES,8.25K OHM,1/4W,1%,METAL	2	R304, R305,
.....4	130-2423	RES,240 OHM,2W,5%	2	R301, R309,
.....4	201-0012	ZENER VOLTAGE SUPPRESSOR,12V	12	D310, D311, D312, D313, D314, D315, D316, D317, D318, D319, D320, D321
.....4	201-0027	ZENER VOLTAGE SUPPRESSOR,27V	4	D302, D303, D304, D305
.....4	201-0040	ZENER VOLTAGE SUPPRESSOR,18V	4	D306, D307, D308, D309
.....4	203-4005	DIODE,1N4005	1	D301,
.....4	270-0065	REL,SPDT,12VDC,DIP	1	K301,
.....4	340-0004	SW,JUMPER PROGRAMMABLE	2	P308, P309
.....4	364-4662	INDU,1.0MH	2	L303, L305,
.....4	411-0001	FILTER,EMI 10,000PF 3PIN	18	FL301, FL302, FL303, FL304, FL305, FL306, FL307, FL308, FL309, FL310, FL311, FL314, FL315, FL316, FL320, FL321, FL322, FL323
.....4	417-0003	CONN,HEADER 3 PIN	2	J308, J309
.....4	417-0039-VLX	CONN,BNC,PCB,VERT MOUNT,VALOX BODY	5	J305, J301, J302, J303, J304
.....4	417-0200	CONN,HEADER 20 PIN	1	J307,

BOM LEVEL	PART NO.	DESCRIPTION	QTY	REF. DES.
.....4	417-1276	CONN,PCB,12 PIN	1	J306
.....4	417-2502-FER	RCPT,25 PIN D,FEMALE,FERITE FILTER	1	J1
.....4	420-6105	SCREW,6-32X.312,S.S. PH	10	
.....4	423-6002	#6 LOCK SPLIT	20	
.....4	426-6000	PEM NUT,#6-32 KFS2-632	10	
.....4	441-0184	STOFF,6-32,MALE-FEMALE,3/8	10	
.....4	519-0445-001	PCB,MACH,RFI FILTER	1	
.....5	519-0445	PCB,MACH,RFI FILTER BREAKAWAY	0.5	
.....4	519-0445-002	PCB,MACH,RFI FILTER SHIELD	1	
.....5	519-0445	PCB,MACH,RFI FILTER BREAKAWAY	0.5	
.....3	949-0149-002	WIRE HARNESS, FX-50E (SBCM)	1	
.....4	402-0000	TY-RAP	40	
.....4	402-0051	TY-RAP, W/FLAG	15	
.....4	410-0051	LUG,TERM,14-16GA,FEMSPADE	1	
.....4	410-0065	LUG,TERM #6 RING CRIMP #22 AWG	4	
.....4	410-1421	LUG,QUICK DISCONNECT #18-22	2	
.....4	410-1552	LUG,TERM #8 RING CRIMP 16-22	2	
.....4	410-1553	LUG,TERM #10 RING CRIMP 16-22	5	
.....4	417-0036	PIN CONN,AMP,350967-1	6	
.....4	417-0053	SKT,CONN 641294-1 AMP	50	
.....4	417-0059	CONN,9 PIN 1-640521-0 AMP	1	
.....4	417-0122	HSNG,20 POS MOD IV 3-87499-7	2	
.....4	417-0123	HSNG,16 POS MOD IV 2-87499-9	1	
.....4	417-0148	HSNG,10 POS MOD 1V 1-87499-7	1	
.....4	417-0176	CONN,20 PIN FEM,AMP 1-350245-9	1	
.....4	417-0224	KEYING PLUG MOD IV 87077 AMP	3	
.....4	417-1401	HOUSING,SKT,14PIN,AMP MOD IV	2	
.....4	417-2379	CONN,155OC HOUSING,AMP,MR	1	
.....4	417-8766	CONTACT,CRIMP,MOD-IV 87809-1	72	
.....4	418-0006	HSNG,CONN 6 PIN 1-640510 AMP	1	
.....4	418-0034	PLUG,BNC DUAL CRIMP 1-227079-6	4	
.....4	418-0701	CONN,HOUSING,2 PIN	1	
.....4	418-1271	CONN,HOUSING,12PIN	1	
.....4	601-1800	WIRE,AWG18 19/30 BLK	29.27	
.....4	601-2209	WIRE,AWG22,7/30 WHT	81.9	
.....4	621-1359	CBL,COAX,RG316/U,50 OHM	2.292	
.....4	622-8451	WIRE,BELD 8451,SHIELD,1PR	12.75	
.....3	957-0003	ACCESSORY PARTS KIT FX50	1	
.....4	330-1200	FUSE, 12A, 250V, CERAMIC, SLO-BLOW	1	
.....4	334-0100	FUSE,1A MDL SLO BLO 250V	2	
.....4	334-0300	FUSE,3AG,3A,125V,SLOW BLOW	1	
.....4	682-0001	CORD LINE,3 COND,DETACH 7.5FT	1	
.....4	701-0001	ENVELOPE,COIN 2-1/2 X 4-1/4	4	
.....4	701-0019	ANTISTATIC ZIPLOC BAG 13X18 4M	1	
.....4	947-0020	ASSY,CBL BNC ACCESS (SBCM)	2	
.....5	417-0094	CONN,BNC RG/U58 31-320 AMPH	2	
.....5	622-0050	CBL,SH,50 OHM,RG-58/CU	2.5	
.....4	979-9983	KIT,BIND 〃,FX-50	1	
.....5	597-1050	INSTRUCTION MANUAL, FX 50/FX 50E FM EXCITER	1	

BOM LEVEL	PART NO.	DESCRIPTION	QTY	REF. DES.
.....6	594-9999	PAPER,COPIER 8 1/2 X 11,20LB HI-TEC	0.001	
.....5	598-0010-001	BINDER,1 IN, BLUE,W CD POCKET	1	
.....3	959-0203	ASSY MODL,MODLTD. OSC. (SBCM)	1	
.....4	008-1020	CAP,FEEDTHRU,100PF 20% 250V	1	C21
.....4	008-1033	CAP,FEEDTHRU,1000PF,20%,500V	2	C19, C20
.....4	040-6223	CAP,MICA,620PF,300V,5%	1	C23
.....4	360-0003	FERRITE BEAD,.291 DIA	3	
.....4	364-0002	CHOKE,VK200-20/4B FERROXCUBE	1	L7
.....4	402-0000	TY-RAP	5	
.....4	402-0006	MT,ADH BACKED,FOR CBL TIES	1	
.....4	402-0008	MTG DEVICE,FOR #6SCR,TIE CBL	1	
.....4	410-1419	LUG,SOLDER 7/8	1	
.....4	417-0016	CONN,BNC,RF,UG1094A/U,AMPHENOL	2	J6, J9
.....4	420-4404	SCREW,4-40X.250,S.S. SHCS	7	
.....4	420-4504	SCREW,4-40X.250,S.S. PH	1	
.....4	420-4506	SCREW,4-40X.375,BR FLH SC	4	
.....4	423-4004	#4 LOCK EXT TOOTH	7	
.....4	470-0328	BRKT,BNC,MOD OSC	1	
.....4	479-6443-003	BOX,MOD.,MODULATED OSC FX50	1	
.....4	601-0022	WIRE,AWG22,BUSS	0.166	
.....4	611-2500	TUB,HT SHK,1/4	0.083	
.....4	693-0220	TUB,TEFLON,TW,AWG22 NTL	0.249	
.....4	919-0106	ASSY PCB,MODLTD.OSC FX-50	1	
.....5	000-3302	CAP,CER,DISC,3.3PF,1000V	1	C16
.....5	001-5004	CAP,CER,DISC,5PF,500V,NPO	1	C15
.....5	009-4723	CAP,CER CHIP,470PF,200V,5%	2	C3, C22
.....5	023-1076	CAP,LYTIC,10uF,50V,STDUP	1	C6
.....5	023-1084	CAP,LYTIC,100MFD,35V,STDUP,RAD	2	C4, C7
.....5	040-1213	CAP,MICA,12PF,500V,5%	1	C2
.....5	042-3312	CAP,MICA,33PF,500V,5%	2	C1, C8
.....5	042-3922	CAP,MICA,390PF,100V,5%	9	C5, C9, C10, C11, C12, C13, C14, C17, C18
.....5	100-1031	RES,100 OHM,1/4W,1%,METAL	2	R12, R6
.....5	100-1041	RES,1K OHM,1/4W,1%	3	R7, R13, R14
.....5	100-1111	RES,118 OHM,1/4W,1%	1	R22
.....5	100-4561	RES,453K OHM,1/4W,1%	1	R10
.....5	103-1007	RES,1 MEG OHM,1/4W,1%,METAL	1	R9
.....5	103-1021	RES,10 OHM,1/4W,1%,METAL	4	R1, R11, R15, R20
.....5	103-1062	RES,100K OHM,1/4W,1%,METAL	1	R5
.....5	103-2213	RES,221 OHM,1/4W,1%,METAL	5	R4, R17, R18, R19, R21
.....5	103-2673	RES,267 OHM,1/4W,1%,METAL	1	R8
.....5	103-2744	RES,2.74K OHM,1/4W,1%,METAL	1	R16
.....5	103-3324	RES,3.32K OHM,1/4W,1%,METAL	1	R3
.....5	103-5112	RES,51.1 OHM,1/4W,1%,METAL	2	R23, R24
.....5	201-2800	DIODE,HOT CARRIER	3	D9, D10, D11
.....5	203-4005	DIODE,1N4005	1	D12
.....5	205-0109	DIODE,VARI-CAP TUNING	6	D2, D3, D4, D6, D7, D8
.....5	205-3201	DIODE,VARACTOR,KV3201 2-11PF	2	D1, D5

BOM LEVEL	PART NO.	DESCRIPTION	QTY	REF. DES.
.....5	211-0006	MPS-A06 NPN 80V .5A .3W 100MHZ	1	Q1
.....5	211-5109	TSTR,RF 2N5109 NPN	2	Q4, Q5
.....5	212-0310	TSTR,FET N CHAN RF J3100	2	Q2, Q3
.....5	360-3300	CHOKE,RF,3.3UH,380MA,9230-32	3	L1, L3, L6
.....5	364-0047	COIL, MOLDED .47UH	2	L4, L5
.....5	370-0106	COIL, MOD OSC., L2	1	L2
.....6	555-0106	LABOR, 370-0106	1	
.....6	610-0026	SMALL TRANS LINE	0.708	
.....5	409-0012	PAD,TSTR 520-021 BIVAR TO-5	2	
.....5	413-1597	TERM,TURRET,2 SHLDR,.219,GOLD FLASH	6	E1, E2, E3, E4, E5, E6
.....5	440-0018	STOFF,ANTI ROT 7/32 RND X 1/4	4	
.....5	519-0106	PCB,BLANK,MODLTD.OSC. (scan)	1	
.....4	949-1050	ASSY, CABLE, MOD OSC. (SBCM)	1	
.....5	402-0051	TY-RAP, W/FLAG	1	
.....5	417-0165	HSNG,5POS MOD IV S.ROW 87499-9	1	
.....5	417-0224	KEYING PLUG MOD IV 87077 AMP	1	
.....5	417-8766	CONTACT,CRIMP,MOD-IV 87809-1	4	
.....5	611-1250	TUB,HT SHK,1/8	2	
.....5	621-1359	CBL,COAX,RG316/U,50 OHM	2	
.....3	959-0204	ASSY MODL,RF AMP	1	
.....4	008-1033	CAP,FEEDTHRU,1000PF,20%,500V	4	C1, C2, C3, C4
.....4	040-3312	CAP,MICA,33PF,350V,10%	1	C33
.....4	046-0005	CAP,MICA,150PF,350V,10%	1	C32,
.....4	130-3333	RES,330 OHM,2W,5%	1	R19
.....4	210-2860	TSTR,RF,DU2860U 60W DMOS	1	Q4
.....4	213-6198	TSTR,RF PWR,2N6198	1	Q3
.....4	219-3000	TSTR, DARLINGTON, SI, NPN	2	Q1, Q2
.....4	227-0339	VR,LM338K,5AMP ADJUSTABLE	1	U1
.....4	229-2830	AMP,RF,HYBRID	1	U2
.....4	330-0802	FUSE,FAST ACTING,8A,GBB-8,BUSS	1	
.....4	360-0003	FERRITE BEAD,.291 DIA	15	
.....4	402-0000	TY-RAP	1	
.....4	402-0835	CLAMP,CBL,3/8	1	
.....4	407-0186	TOOL,ADJ 8 T000/5 SPECTROL	1	
.....4	407-3000	COVER,TSTR	3	
.....4	415-1010	FUSE CLIP,LITTLEFUSE,101002	4	
.....4	417-0017	RECP,BNC,BULKHEAD,UG-492A/U	2	J17, J18
.....4	418-0010	INSULATOR,MICA,TSTR,TO-3PKG	3	
.....4	420-0305	SCREW,4-40X.375,BR PH SC	2	
.....4	420-0509	SCREW,10-32X.500,BR SL PAN HD	1	
.....4	420-4104	SCREW,4-40X.250,S.S. PH	4	
.....4	420-6105	SCREW,6-32X.312,S.S. PH	13	
.....4	420-6106	SCREW,6-32X.375,S.S. PH	2	
.....4	420-6110	SCREW,6-32X.625,S.S. PH	6	
.....4	420-6112	SCREW,6-32X.750,S.S. PH	2	
.....4	420-8100	SCREW,8-32X.250,BR SL PAN HD	6	
.....4	421-0801	#10-32 BR HEX NUT	1	
.....4	421-8002	8-32 HEX NUT, BRASS	1	
.....4	423-0005	#10 LOCK SPLIT (BRONZE)	1	

BOM LEVEL	PART NO.	DESCRIPTION	QTY	REF. DES.
.....4	423-1011	#4 LOCK SPLIT (BRONZE)	2	
.....4	423-4002	#4 LOCK S.S. SPLIT	4	
.....4	423-6002	#6 LOCK SPLIT	24	
.....4	423-6011	#6 FLAT .310 X .160 X .030	1	
.....4	423-8005	#8 LOCK SPLIT	6	
.....4	441-0184	STOFF,6-32,MALE-FEMALE,3/8	1	
.....4	450-0651	PLUG,HOLE,5/16	1	
.....4	455-0049-001	HEATSINK,RF AMP,FX50	1	
.....4	471-0585	COVER,RF AMP FX50	1	
.....5	471-0585-009	COVER,RF AMP,UNSCREENED FX50	1	
.....4	474-0301	PLATE,FRT,RF AMP PCB COVER	1	
.....4	474-0302	PLATE,BACK,RF AMP PCB COVER	1	
.....4	919-0105-001	ASSY PCB,RF AMP FX-50	1	
.....5	002-1034	CAP,CER,DISC,.001UF,1000V	1	C26
.....5	009-6813	CAP,CER CHIP,68PF,500V,5%	1	C43
.....5	024-3374	CAP,LYTIC,33UF,35V,STDUP	2	C23, C31,
.....5	038-4753	CAP,PYST,.47UF,100V	2	C22, C30,
.....5	040-3312	CAP,MICA,33PF,350V,10%	1	C35,
.....5	040-5013	CAP,MICA,50PF,500V,5%	2	C37, C41,
.....5	040-6813	CAP,MICA,68PF,500V,5%	1	C13,
.....5	042-2000	CAP,MICA,200PF,350V,10%	4	C14, C15, C25, C36,
.....5	042-3922	CAP,MICA,390PF,100V,5%	12	C8, C9, C11, C12, C19, C21, C28, C29, C38, C39, C40, C42,
.....5	046-0003	CAP,MICA,RF,80PF,350V,10%	2	C17, C18,
.....5	046-0004	CAP,MICA,47PF,350V,10%	2	C34, C20,
.....5	046-0005	CAP,MICA,150PF,350V,10%	2	C16, C24,
.....5	100-1031	RES,100 OHM,1/4W,1%,METAL	2	R14, R20,
.....5	100-1051	RES,10K OHM,1/4W,1%	3	R4, R13, R15,
.....5	100-2041	RES,2K OHM,1/4W,1%	1	R5,
.....5	103-2212	RES,22.1 OHM,1/4W,1%,METAL	2	R8, R21,
.....5	103-4324	RES,4.32K OHM,1/4W,1%,METAL	1	R2,
.....5	103-4755	RES,47.5K OHM,1/4W,1%,METAL	1	R3,
.....5	103-4993	RES,499 OHM,1/4W,1%,METAL	1	R18,
.....5	103-5112	RES,51.1 OHM,1/4W,1%,METAL	1	R7,
.....5	103-7541	RES,7.50K OHM,1/4W,1%,METAL	1	R16,
.....5	110-3623	RES,36 OHM,1/2W,5%	1	R6,
.....5	130-2223	RES,22 OHM,2W,5%	2	R9, R11,
.....5	130-4723	RES,47 OHM,2W,5%	1	R10
.....5	177-2034	RES,TRMR,200 OHM,VERT ADJ	1	R12
.....5	177-2045	RES,TRMR,2K,10T,TOP ADJ 3299W	1	R17
.....5	201-2800	DIODE,HOT CARRIER	2	D1, D2
.....5	211-3904	TSTR,2N3904	1	Q6
.....5	218-0032	TSTR,TIP32A,2N6125	1	Q5
.....5	330-0200	FUSE,3AG,2 AMP	1	F1
.....5	360-0010	FERRITE TOROID 5961001101	1	L7
.....5	364-0002	CHOKE,VK200-20/4B FERROXCUBE	2	L1, L4
.....5	364-0010	CHOKE,MOLDED RF 10UHY 10%	1	L3
.....5	364-0032	COIL,MOLDED .032UH	1	L6
.....5	364-0051	COIL,MOLDED .051UH	1	L2
.....5	415-2068	CLIP,FUSE,15AMP,LITTLEFUSE,102071	2	
.....5	417-0677	CONN,PCB MT,6PIN MALE	1	J16

BOM LEVEL	PART NO.	DESCRIPTION	QTY	REF. DES.
.....5	417-5022	SKT,LEAD .020 D,SAMTEC SEP-266	1	
.....5	519-0105	PCB,BLANK RF AMP FX50	1	
.....5	601-0022	WIRE,AWG22,BUSS	0.083	W1
.....5	640-1800	WIRE AWG 18 EN MAGNET	0.031	L5, L8
.....5	693-0220	TUB,TEFLON,TW,AWG22 NTL	0.083	
.....4	919-0410-004	ASSY,PCB,REGULATOR,FM-100C (SBCM)	1	
.....5	030-1053	CAP,MYLAR FILM,.1uF,100V,RAD	4	C404, C405, C406, C407,
.....5	042-3922	CAP,MICA,390PF,100V,5%	3	C401, C402, C403,
.....5	100-1231	RES,121 OHM,1/4W,1%	1	R401
.....5	229-0335	IC,LM335,TEMPERATURE SENSOR	1	U401
.....5	360-0001	FERRITE BEADS,F-R 2643000301	13	FB401, FB402, FB403, FB404, FB405, FB406, FB407, FB408, FB409, FB410, FB411, FB412, FB413,
.....5	417-0169	CONN 15 PIN 640503-1 AMP	1	J401
.....5	417-0299	SOCKET,TO-3,PCB MT	3	XU402, XQ401, XQ402
.....5	519-0410-004	PCB,MACH,REGULATOR,FM-100C	1	
.....5	601-0022	WIRE,AWG22,BUSS	0.8	
.....4	949-0144	ASSY, WIRE HRNS,FX50 RF AMP (SBCM)	1	
.....5	402-0000	TY-RAP	11	
.....5	410-0060	LUG,TERM,#10 RING CRIMP 10-12G	1	
.....5	410-1553	LUG,TERM #10 RING CRIMP 16-22	1	
.....5	417-0036	PIN CONN,AMP,350967-1	19	
.....5	417-0053	SKT,CONN 641294-1 AMP	19	
.....5	417-0175	CONN, HOUSING, 20 PIN	1	J15
.....5	417-2379	CONN,155OC HOUSING,AMP,MR	1	
.....5	418-0034	PLUG,BNC DUAL CRIMP 1-227079-6	2	
.....5	418-0670	HOUSING,CONN,6PIN FEM	1	P16
.....5	601-1800	WIRE,AWG18 19/30 BLK	20	
.....5	601-2209	WIRE,AWG22,7/30 WHT	20	
.....5	621-1359	CBL,COAX,RG316/U,50 OHM	1	
.....5	693-0002	SLVG,1/4 EXPANDO FR BLACK"	1	
.....3	961-0003-100	KIT, HARDWARE RACK, FX50	1	
.....4	402-0001	TY-RAP,T TY24M,1-1/4 DIA	4	
.....4	420-0108	SCREW,10-32X.500,S.S. PHH	4	
.....4	420-0508	SCREW,10-32X.500,S.S. FLH	8	
.....4	420-8006	SCREW,8-32X.375,S.S. PH FLH UC	4	FOR CUSTOMER TO MOUNT OUTER SLIDE RAILS.
.....4	420-8110	SCREW,8-32X.625,S.S. PHH	4	
.....4	421-0102	10-32 KEP NUT	8	
.....4	423-0001	WASHER,FLAT,#10 SST,.438 X .203 X .065	8	
.....4	459-0138-001	RETAINER,SLIDE BRKT	2	
.....4	469-0415	SLIDE, EXCITER CHASSIS	1	
.....4	470-0102	BRKT,MTG,EXCITER SLIDES	4	
.....4	701-0005	ANTISTATIC ZIPLOC BAG 4X6 4MIL	1	
..1	959-0509-313	ASSY, RF AMP MODULE, FM-10S/FMi	17	

BOM LEVEL	PART NO.	DESCRIPTION	QTY	REF. DES.
....2	400-2191	GROMMET,1 ID,FOR .125 PANEL"	1	
....2	421-6908	SHEET EDGE CONNECTOR 6-32	1	
....2	422-6107	SCREW,SEMS 6-32 X 7/16 PAN PH.ST."	8	
....2	471-5216	COVER,AMP MODULE,SUMO	1	
....2	959-0509-213	ASSY, RF MODULE LESS COVER, FM-10S/FMi	1	
.....3	959-0508	ASSY,RF MODULE COMBINER,FM-10S (SBCM)	1	
.....4	417-0384	CONN,N" TYPE,MALE TO PIN, NO NUT"	1	J1
.....4	417-1203	CONN,HEADER 12PIN R.ANGLE	1	P3
.....4	420-4106	SCREW,4-40X.375,S.S. PH	8	
.....4	421-4001	4-40 S.S. HEX NUT	8	
.....4	421-4008	4-40 KEP NUT	4	
.....4	421-6908	SHEET EDGE CONNECTOR 6-32	2	
.....4	441-0212	SPACER,MODULE COMBINER,FM-10S	8	
.....4	519-0509	PCB,MACH,MODULE SUPPORT,FM-10S	2	
.....4	519-0512	PCB,MACH,MODULE COMBINER BREAKAWAY,FM-10S	1	
.....4	919-0508	PCB,ASSY,MODULE COMBINER,FM-10S(SBCM)	1	
.....5	009-1032	CAP,CER CHIP,1000PF,100V,5%	5	C1, C4, C5, C6, C9
.....5	009-1813	CAP,CER CHIP,18 PF,5%,500V	1	C2
.....5	009-2413	CAP,CER CHIP,24PF,500V,5%	1	C8
.....5	101-1620	RES,CHIP,162 OHM,1/8W,1%,SMD	1	R2
.....5	101-1690	RES,CHIP,169 OHM,1/8W,1%SMD SIZE 1206	1	R13
.....5	102-1001	RES,CHIP,1.00K OHMS,1/10W,1%,SMD	1	R3
.....5	102-1063	RES,CHIP,100K OHMS,1/10W,5%,SMD	5	R1, R5, R6, R7, R9
.....5	102-1330	RES,CHIP,133 OHMS,1/8W,1%,SMD	2	R12, R14
.....5	102-5143	RES,5.1K OHMS,1/10W,1%,SMD	2	R8, R11
.....5	201-2801	DIODE,HOT CARRIER,MMBD701LT1,SMD	3	D1, D2, D3
.....5	366-0013	INDUCTOR,.12uH,CHIP,SMD	2	L1, L8
.....5	366-0014	INDUCTOR,0.82 uH,CHIP,SMD	1	L2
.....5	366-0015	INDUCTOR,1.00 uH,CHIP,SMD	1	L7
.....5	366-6152	FERRITE,CHIP IMPEDANCE 1500OHMS @ 100MHZ MULTILAYER, 0805	3	FL2, FL3, FL4
.....5	426-8010	STUD,PEM,KFH-440-4ET,PCB MOUNT	4	
.....5	519-0508	PCB,MACH,MOD. COMBINER COUPLER,FM-10S (NOTE)	1	
.....3	959-0509-113	ASSY, RF MODULE LESS COMBINER, FM-10S/FMi	1	
.....4	210-2932	TSTR, RF POWER, SD2932BW (note)	2	
.....4	330-2000	FUSE,20A 250V	2	F1, F2
.....4	420-2104	SCREW,2-56X.250,S.S. PH SC	4	
.....4	420-4106	SCREW,4-40X.375,S.S. PH	3	
.....4	420-4306	SCREW,4-40X.375,S.S. SHCS	4	
.....4	422-6106	SCREW,SEMS 6-32 X 3/8 PAN PH. ST."	17	
.....4	423-2002	#2 LOCK SPLIT	4	
.....4	423-4001	#4 FLAT SS .250 X .125 X .018	4	
.....4	423-4002	#4 LOCK S.S. SPLIT	7	
.....4	455-8008-1	ASSY, HEATSINK TREE AND GRASS	1	
.....5	420-0072	SCREW,10-32X3/4,PHL FLT SST	12	
.....5	455-8007	HEATSINK, TREE, SUMO	3	

BOM LEVEL	PART NO.	DESCRIPTION	QTY	REF. DES.
.....5	455-8008	HEATSINK, GRASS, SUMO	1	
.....4	519-0507	PCB,MACH,MODULE SUB-BOARD,FM-10S	1	
.....4	919-0505-113	ASSY, PCB, RF AMP, S SERIES	2	
.....5	009-2723	CAP,CER CHIP,270PF,300V,5%	2	C102, C103
.....5	009-4723	CAP,CER CHIP,470PF,200V,5%	4	C101, C104, C109, C110
.....5	090-5010	CAP,TRIM,MONO CERAMIC,6-50pF,50V	1	C116
.....5	220-0035	IC,LM35DZ CELSIUS TEMP SENSOR	1	U101
.....5	370-0062	ASSY,FM-10S,XFMR,RF AMP OUTPUT (SBCM)	1	T101
.....6	463-0126	TUBING,COPPER,1/8X.014X1.530	4	
.....6	610-2401	WIRE,TEFLON,18 AWG,600V,200C	0.8	
.....5	370-0063	ASSY,FM-10S,XFMR,RF AMP INPUT (SBCM)	1	
.....6	610-2401	WIRE,TEFLON,18 AWG,600V,200C	0.22	
.....5	370-0069	ASSY COIL,FM10S PA,L102 (SBCM)	1	L102
.....6	610-2401	WIRE,TEFLON,18 AWG,600V,200C	0.24	
.....5	463-0127	TUBING,COPPER,1/8X.014X1.300	1	
.....5	919-0505-013	SUB-ASSY, PCB, RF AMP, FM-10S/FMi (SBCM)	1	
.....6	009-1013-001	CAP,CER CHIP,10pF,500V,2%	3	C120, C121, C122
.....6	009-1032	CAP,CER CHIP,1000PF,100V,5%	3	C105, C106, C107
.....6	009-2023	CAP,CER CHIP,200PF,300V,5%	1	C119
.....6	009-6813-001	CAP,CER CHIP,68 pF, 2%,500V	1	C118
.....6	013-4784	CAP, LYTIC, 470 UF, 63V, RAD, 12.5MM DIA.	1	C124
.....6	046-1030	CAP,METAL FEED,1000PF,350V,10%	1	C117
.....6	101-2243	RES,CHIP,2.2K OHM,1/4W,5%	3	R105, R106, R107
.....6	102-1002	RES,CHIP,10.0K OHMS,1/10W,1%,SMD	1	R110
.....6	111-2223	RES,CHIP,22 OHM,1W,5%	6	R101, R102, R103, R104, R111, R112
.....6	198-0503	TRMR,50K,TOP ADJUST,SMD	1	R109
.....6	415-0022	CLIP,FUSE,3AG,SMD	1	XF1-2
.....6	417-0292	CONN,5 PIN,SMD	1	P1
.....6	417-0296	CONN,2 PIN,SMD	1	P2
.....6	519-0505-013	PCB, MACH, RF AMP, FM-10S/FMi	1	
.....4	919-0514-013	ASSY,PCB,RF AMP I/F,FM-10S/FMi (SBCM)	1	

BOM LEVEL	PART NO.	DESCRIPTION	QTY	REF. DES.
.....5	006-1006	CAP,47 uF,Electrolytic,63V,SMD (NOTE)	1	C27
.....5	007-1022	CAP,CER,100pF,50V,2%,SMD	1	C4
.....5	007-1044	CAP,CER,0.1uF,50V,10%,SMD note	11	C3, C5, C6, C7, C8, C9, C10, C12, C13, C14, C19
.....5	007-1044-200	CAP, CHIP, .1UF, 200V, 20%, SMD	5	C1, C2, C22, C20, C35
.....5	007-1054-001	CAP,CER,1UF,10%,10V,X7R,0805,SMD	1	C36
.....5	007-2012	CAP,CER,20pF,50V,2%,SMD	1	C11
.....5	007-2704-001	CAP, EMI FILTER, SMD	19	FL1, FL2, FL3, FL4, FL7, FL8, FL9, FL10, FL11, FL12, FL13, FL14, FL15, FL16, FL17, FL18, FL19, FL21, FL22
.....5	007-2704-002	CAP, EMI FILTER, SMD, 1000PF	1	FL20
.....5	009-1032	CAP,CER CHIP,1000PF,100V,5%	1	C31
.....5	009-4723	CAP,CER CHIP,470PF,200V,5%	3	C32, C33, C34
.....5	009-8013-001	CAP, CER CHIP, 82pF, 2%, 500V	2	C24, C30
.....5	046-1030	CAP,METAL FEED,1000PF,350V,10%	1	C28
.....5	070-1065	CAP,TANT,10UF,20V,10%,SMD	3	C15, C16, C17
.....5	090-0004	CAP,TRMR,CER,4-25PF,SMD,NPO	4	C23, C25, C26, C29
.....5	101-0003	RES,THICK FILM,0 OHM,1/8W,5%,SMD	4	R40, R41, R49
.....5	101-1822	RES,CHIP,18.2K OHM,1%,1/8W,1206,SMD	1	R46
.....5	102-1001	RES,CHIP,1.00K OHMS,1/10W,1%,SMD	6	R7, R8, R16, R31, R19, R24
.....5	102-1002	RES,CHIP,10.0K OHMS,1/10W,1%,SMD	14	R6, R9, R32, R10, R15, R35, R36, R37, R38, R25, R4, R42, R43, R47
.....5	102-1003	RES,CHIP,100K OHMS,1/10W,1%,SMD	5	R5, R17, R18, R44, R45
.....5	102-1004	RES,CHIP,1.00M OHMS,1/10W,1%,SMD	3	R29, R30, R3
.....5	102-1102	RES,CHIP,11.0K OHMS,1/10W,1%,SMD	1	R12
.....5	102-2212	RES,CHIP,22.1K OHMS,1/10W,1%,SMD	2	R21, R22
.....5	102-2261	RES,CHIP,2.26K OHM,1/10W,1%,SMD	1	R11
.....5	102-4021	RES,CHIP,4.02K OHMS,1/10W,1%,SMD	2	R14, R28
.....5	102-9094	RES,CHIP,9.09K OHM,1/10W,1%	1	R13
.....5	111-0005	.003 OHM 3W CURRENT SENSE RES, SMT	1	R23
.....5	131-5030	RES,50 OHM,250W,5%,FLANGE MOUNT	1	R34
.....5	132-5002	RES,50 OHM,20W,1%,TO-220 PKG	1	R33
.....5	198-0503	TRMR,50K,TOP ADJUST,SMD	2	R1, R2
.....5	198-1054	TRMR,10K OHMS,TOP ADJ,SMD (N)	1	R27
.....5	204-0914	DIODE,SWITCHING,MMBD914LT1,SMD	7	D1, D2, D3, D4, D5, D6, D9
.....5	210-1047	DIODE,ZENER,4.7V,225MW,SMD,SOT23	2	D7, D8
.....5	210-3310	P CHAN ENH MODE FET 60V SOT23	1	Q1
.....5	221-0184	SINGLE RAIL TO RAIL OP AMP, 4 MHZ BW	1	U6
.....5	221-0824	IC, OP AMP, AD 824, QUAD, RAIL TO RAIL	2	U3, U4
.....5	224-0351	IC,ANALOG SWITCH (NOTE)	1	U5
.....5	366-0017	IND, 17.5 NH, AIR, 16MM, 5%, SMD	2	L2, L3

BOM LEVEL	PART NO.	DESCRIPTION	QTY	REF. DES.
.....5	366-6152	FERRITE,CHIP IMPEDANCE 1500OHMS @ 100MHZ MULTILAYER, 0805	4	FL5, FL6, Fl23, Fl24
.....5	413-1206	CHIP,TEST POINT,1206,SMD	1	TP1
.....5	415-0022	CLIP,FUSE,3AG,SMD	2	XF1, XF2
.....5	417-0293	CONN,SOCKET STRIP,5 POS,SMD	2	J1A, J1B
.....5	417-0294	CONN,JACK,8 POS,DIP,BOT.ENTRY,SMD	1	J3
.....5	417-0297	CONN,SOCKET STRIP,2 POS,SMD	2	J2A, J2B
.....5	417-0308	CONN,JACK,3-PIN,SMD	2	J4A, J4B
.....5	417-0309	PLUG,JUMPER SHUNT,2-PIN	2	P4A, P4B
.....5	479-1375	SHIELD, 1.0 X 3.75" X .25""	1	
.....5	519-0514-013	PCB, MACH, RF AMP INT, FM-10S/FMi	1	
.....5	640-1001	WIRE, 10 GA, TIN PLATED	0.4	
..1	969-1010	KIT,ACCESSORY PARTS,FM-10S	1	
....2	330-1000	FUSE,MDA 10A 250V SLO-BLO	2	
....2	330-2000	FUSE,20A 250V	4	
....2	402-0000	TY-RAP	12	
....2	420-0518	SCREW,10-32X.375,S.S. FLH UC	4	
....2	420-0710	SCR,10-32 X 5/8,NATURAL SST,TRUSS HD,PHILLIPS DRIVE"	8	
....2	421-6008	6-32 KEP NUT	4	
....2	421-6908	SHEET EDGE CONNECTOR 6-32	6	
....2	422-6107	SCREW,SEMS 6-32 X 7/16 PAN PH.ST."	4	
....2	471-5263	AIR DAM,MEDIUM,SUMO	2	
....2	682-0910	CORD, AC POWER, UNIVERSAL JUMPER	1	
....2	979-9974	KIT,BIN 〃,FM-5S/10S, FMi703	1	
.....3	597-1012	INSTRUCTION MANUAL, FM 10S/FMI 703 FM TRANSMITTER	1	
.....4	594-9999	PAPER,COPIER 8 1/2 X 11,20LB HI-TEC	0.001	
.....3	598-0008	BINDER,2 IN, BLUE W CD POCKET (NOTE)	1	
..1	979-0523	KIT, SOFTWARE, FM-10S SUPERVISOR CPU	1	
....2	544-7220	PCB ASSY,SMARTCORE WITH FLASH	1	

BOM LEVEL	PART NO.	DESCRIPTION	QTY	REF. DES.
0	909-0703-526	FMi-703 HD XMTR EXG 220V 1PH		
..1	420-0518	SCREW,10-32X.375,S.S. FLH UC	17	
..1	463-5300	FILLER PLATE FOR SAMPLE PORT ON 3 1/8 LINE"	1	
..1	469-0366	FINGER STOCK (NOTE!!!!!)	200	
..1	506-0700-204	PANEL,BLANK,FMi,4RU	2	
..1	909-0703-226T	FMi-703 HD XMTR 220V 1PH, BASIC TEST	1	
....2	320-0100-1	LCD DISPLAY W/CABLE	1	
.....3	320-0100	DISPLAY,LCD,16 CHARx2 LINES	1	
.....3	417-1640	FLAT FLEX CABLE ASSY, .100 X 16 POS	1	
....2	370-0176	FILTER, CABLE/CLAMP, 100 OHM, 13MM	1	
....2	375-0007-100	CORE, RF TRANSFORMER	4	
....2	375-0011	CORE, LOW FREQUENCY CHOKE	4	
....2	380-9100	FAN,W2E208-BA20-51,EBM	4	
....2	400-0000	GROMMET,1/2ID X 7/8"OD FOR 3/4"HOLE"	2	
....2	400-0207	STRIP,QUIET SHIELD,.250x.375""	1.65	
....2	401-0015	MTG,ADH BACK,SMS-A-15-PANDUIT	3	
....2	401-0022	CONNECTOR, SET SCREW, 1 1/2EMT"	2	
....2	401-0024	CONDUIT,AC ENTRY,SUMO	1	
....2	402-0000	TY-RAP	26	
....2	402-0001	TY-RAP,T TY24M,1-1/4 DIA	1	
....2	402-0008	MTG DEVICE,FOR #6SCR,TIE CBL	24	
....2	402-0014	CLAMP,HOSE 4 1/2	7	
....2	402-0839	CLAMP,CBL,5/8	4	
....2	402-0840	CLAMP,CBL 3/4	2	
....2	407-0168	FILTER,AIR,FXA 9.75x19.75"x.86""	2	
....2	411-0118	EMI FILTER ASSY, 18 POSITION, 2500 PF	1	
....2	417-0017	RECP,BNC,BULKHEAD,UG-492A/U	1	
....2	417-0105	ADAPT,PLUG-JACK ANGLE N UG27CU	2	
....2	417-6121-250	SOCKET, AC OUTLET, 6 WAY, EUROPEAN	1	
....2	418-0035	ADPTR,JACK-JACK 82-66 AMPHENOL	1	
....2	420-0072	SCREW,10-32X3/4,PHL FLT SST	4	
....2	420-0108	SCREW,10-32X.500,S.S. PHH	6	
....2	420-0508	SCREW,10-32X.500,S.S. FLH	8	
....2	420-0710	SCR,10-32 X 5/8,NATURAL SST,TRUSS HD,PHILLIPS DRIVE"	22	
....2	420-0817	ASSY,FEMALE SCREWLOCK 205817-1	20	
....2	420-3005	SCREW,5/16-18X1.000,S.S. BOLT	2	
....2	420-4105	SCREW,4-40X.312,S.S. PH	20	
....2	420-6002	SCREW,6-32X.437,S.S. PH FH UC	191	
....2	420-8104	SCREW,8-32X.250,S.S. PHH	8	
....2	420-8121	SCREW,8-32X.375,BR PH	2	
....2	421-0102	10-32 KEP NUT	189	
....2	421-1003	1/4-20 HEX NUT	6	
....2	421-1113	RIV,CLOSED-END .125 X .316L	24	
....2	421-2001	2-56 S.S. NUT	4	
....2	421-3003	5/16-18 S.S. HEX NUT	2	
....2	421-4008	4-40 KEP NUT	20	
....2	421-5000	3/8-16 .325 THICK STANDARD	6	
....2	421-6008	6-32 KEP NUT	32	
....2	421-6908	SHEET EDGE CONNECTOR 6-32	108	
....2	421-8002	8-32 HEX NUT, BRASS	6	

BOM LEVEL	PART NO.	DESCRIPTION	QTY	REF. DES.
....2	422-0106	SCREW,10-32 X 3/8,PPH,SEM,SST"	8	
....2	422-6106	SCREW,SEMS 6-32 X 3/8 PAN PH. ST."	37	
....2	422-6107	SCREW,SEMS 6-32 X 7/16 PAN PH.ST."	122	
....2	423-0002	#10 LOCK SPLIT	12	
....2	423-1003	1/4-20 LOCK SPLIT	6	
....2	423-2001	#2 FLAT .250 X .120 X .025	8	
....2	423-2002	#2 LOCK SPLIT	4	
....2	423-3000	5/16 LOCK SPLIT	2	
....2	423-5004	3/8 LOCK SPLIT (BRONZE)	6	
....2	423-6002	#6 LOCK SPLIT	2	
....2	423-8002	#8 LOCK SPLIT	8	
....2	423-8006	#8 LOCK INT TOOTH	8	
....2	427-0001	FLANGE,3-1/8,301-014,MYAT	2	
....2	427-0004	INS-CONN ASSY,MYAT,301-010	1	
....2	441-0042	SPR,1/4RND X 3/16 #6 NYLON	11	
....2	441-1311	SPACER,RD,NYLON,.187 OD,.115 ID,.312 LONG	4	
....2	441-8153	SPR,.25 HEX X .31LG,6-32 THD	2	
....2	457-0044-200	HINGE,CONTROLLER,FMi 703/FMi 1405	1	
.....3	457-0044-009	HINGE, CONTROLLER, SUMO, UNPAINTED	1	
....2	463-5200-101	TRANSMISSION LINE,OUTER,FM10S/FMi703	1	
....2	463-5200-102	TRANSMISSION LINE,INNER,FM10S/FMi703	1	
....2	469-0365	FINGER STOCK,1S197520A	280	
....2	471-5211	COVER,RELAY PCB,SUMO	2	
....2	471-5228-200	TOP,EXTERNAL,FMi 703/FMi 1405	1	
....2	471-5229	BOTTOM,EXTERNAL,SUMO	1	
....2	471-5230	PARTITION,PS TO RF,SUMO	1	
....2	471-5233-100	DIVIDER,FAN MOUNTING,FM10S/FM20S	1	
....2	471-5234-200	PANEL,LOWER FRONT,FMi 703/FMi 1405	1	
....2	471-5237	BRACE,REAR CORNER,SUMO	2	
....2	471-5238-300	DOOR,REAR LOWER,FMi703 W ABB Tmax	1	
....2	471-5239	PLENUM,AIR FILTER,SUMO	1	
....2	471-5240-200	PANEL,AIR FILTER ACCESS,FMi 703/FMi 1405	1	
....2	471-5242-200	DOOR,REAR UPPER,FMi 703/FMi 1405	1	
....2	471-5243-200	DOOR,PA BAY,FMi 703/FMi 1405	1	
....2	471-5244-200	SIDE PANEL,EXTERNAL,FMi 703/FMi 1405	2	
....2	471-5245	ANGLE,TOP,SUMO	1	
....2	471-5248	BRACE,HORIZONTAL,SUMO	1	
....2	471-5251-201	DOOR,CONTROLLER,FMi 703	1	
.....3	471-5251-200	DOOR,CONTROLLER,FMi 703/FMi 1405,UNSCREENED	1	
....2	471-5252-100	CHASSIS,CONTROLLER,SUMO	1	
....2	471-5253	PARTITION,RF TO EXCITER,SUMO	1	
....2	471-5254-200	PANEL,MIDDLE FRONT,FMi 703/FMi 1405	1	
....2	471-5258	ANGLE,EIA MOUNT,SUMO	2	
....2	471-5260	FILLER PLATE,RF OUTPUT,10 KW SUMO	1	
....2	471-5261	SUPPORT,PS,SUMO	1	
.....3	471-5261-009	SUPPORT,PS,SUMO,UNSCREENED	1	
....2	471-5266	FILLER PLATE,CONTROLLER,SUMO	2	
....2	471-5273-100	PLATE,VPE,FM10S	1	
....2	471-5394	BRACKET,CE PLUG STRIP,SUMO	1	

BOM LEVEL	PART NO.	DESCRIPTION	QTY	REF. DES.
....2	481-0038-200	KNOB,1.5 DIA.,FMi 703/FMi 1405"	1	
.....3	481-0038-009	KNOB,1.5 DIA.,DESIGN STANDARDS RKP-7-B"	1	
....2	481-0039-200	KNOB,.75 DIA.,FMi 703/FMi 1405"	1	
.....3	481-0039-009	KNOB,.75 DIA.,DESIGN STANDARDS RKP-5-B"	1	
....2	486-0020	HANDLE,OVAL,CHROME,10-32 X 4 MTG"	2	
....2	486-2285	HANDLE,OVAL,BLK,10-32 X 4	4	
....2	486-5500-100	HANDLE FOR ABB T3 BREAKER	1	
....2	506-0175-204	PANEL,BLANK,FMi,1RU	2	
....2	506-0350-204	PANEL,BLANK,FXi,2RU	1	
....2	540-0016-010	PWR SPLY,5KW,TDI,50VDC,240VAC,1PH,5X5X15.5	4	ps1, ps2, ps3, ps4
....2	594-0019	LABEL,DANGER HV 1X 1.5	3	
....2	594-0073	LABEL,WARNING ROTATING FANS	1	
....2	594-0099	LABEL,WARNING HIGH CURRENT",1" X 1.5",VINYL,ADHESIVE BACKED"	3	
....2	594-0501	LABEL,CE ELECTRICAL SYMBOLS	0.5	
....2	594-0505	LABEL, WARNING-ONLY AUTHORIZED PERSONNEL	1	
....2	682-0910	CORD, AC POWER, UNIVERSAL JUMPER	2	
....2	919-0515	ASSY,PCB,MODULE CONTROL,FM-10S(SBCM)	1	
.....3	006-1075	CAP,LYTIC,10uF,50V,20%,SMD note	6	C14, C15, C16, C17, C212, C213
.....3	007-1034	CAP,CER,0.01uF,50V,10%,SMD	8	C204, C205, C206, C207, C208, C209, C210, C211
.....3	007-1044	CAP,CER,0.1uF,50V,10%,SMD note	174	C1, C2, C3, C4, C5, C6, C7, C8, C9, C10, C11, C12, C13, C18, C19, C20, C21, C22, C23, C24, C25, C26, C27, C28, C29, C30, C31, C32, C33, C34, C35, C36, C37, C38, C39, C40, C41, C42, C43, C45, C46, C47, C48, C49, C50, C51, C52, C53, C54, C55, C56, C57, C58, C59, C60, C61, C62, C63, C64, C65, C66, C67, C68, C69, C70, C71
.....3	102-1000	RES,CHIP,100 OHMS,1/10W,1%,SMD	1	R2

BOM LEVEL	PART NO.	DESCRIPTION	QTY	REF. DES.
.....3	102-1001	RES,CHIP,1.00K OHMS,1/10W,1%,SMD	42	R11, R111, R50, R51, R52, R53, R54, R55, R56, R57, R148, R149, R150, R151, R152, R153, R154, R155, R13, R15, R17, R19, R21, R23, R25, R27, R113, R115, R117, R119, R121, R123, R125, R127, R76, R77, R78, R79, R176, R177, R178, R179
.....3	102-1002	RES,CHIP,10.0K OHMS,1/10W,1%,SMD	67	R3, R5, R7, R9, R10, R28, R29, R30, R31, R32, R33, R34, R35, R36, R103, R105, R107, R109, R110, R128, R129, R130, R131, R132, R133, R134, R135, R136, R37, R39, R40, R41, R137, R138, R139, R60, R61, R62, R63, R64, R65, R67, R160, R161, R162, R163, R164, R165, R166, R167, R66, R68, R69, R70, R71, R72, R73, R74, R
.....3	102-1003	RES,CHIP,100K OHMS,1/10W,1%,SMD	18	R1, R12, R14, R16, R18, R20, R22, R24, R26, R112, R114, R116, R118, R120, R122, R124, R126, R38
.....3	102-1500	RES,CHIP,150 OHMS,1/10W,1%,SMD	16	R42, R43, R44, R45, R46, R47, R48, R49, R140, R141, R142, R143, R144, R145, R146, R147
.....3	102-2001	RES,CHIP,2.00K OHMS,1/10W,1%,SMD	2	R58, R158
.....3	102-2002	RES,CHIP,20.0K OHMS,1/10W,1%,SMD	4	R6, R8, R106, R108
.....3	102-2212	RES,CHIP,22.1K OHMS,1/10W,1%,SMD	2	R4, R104
.....3	204-0914	DIODE,SWITCHING,MMBD914LT1,SMD	2	D1, D2
.....3	210-3906-001	TSTR,3906,SMD	5	Q1, Q2, Q3, Q101, Q102
.....3	224-0014	IC,74HC14,SCHMITT TRIG INVERT	1	U11
.....3	224-0074	IC,DUAL D-FLIP-FLOP,POS EDGE,SMD	1	U10
.....3	224-0244	IC,74HC244,OCTAL/LINE DRIVERS,SMD	2	U18, U118
.....3	224-0351	IC,ANALOG SWITCH (NOTE)	4	U14, U15, U114, U115

BOM LEVEL	PART NO.	DESCRIPTION	QTY	REF. DES.
.....3	224-1491	IC,OP AMP,QUAD,RAIL TO RAIL,SMD	6	U16, U17, U116, U117, U19, U119
.....3	224-7473	IC,74HC373,8-LATCH,SMD	2	U3, U103
.....3	229-0158	IC,A/D AND MUX,SMD	2	U9, U109
.....3	229-0256-001	IC,32K X 8 RAM,SMD	2	U6, U106
.....3	229-2003	IC,ULN2003A MC1413P	4	U12, U13, U112, U113
.....3	229-8032-001	IC,MICPRCR,HIGH,PRFM, 8032,PLCC PKG	2	U2, U102
.....3	229-8255-001	IC,82C55A,PERIPH I/F,PLCC	2	U8, U108
.....3	231-7905	VR,LM79L05AC,NEG VOLT,100mA,SMD	1	U20
.....3	325-0250	LED,DUAL RED/GREEN,LOW PROFILE,SMD	18	DS1, DS2, DS3, DS4, DS5, DS6, DS7, DS8, DS9, DS101, DS109, DS110, DS111, DS112, DS113, DS114, DS115, DS116
.....3	390-0055	OSC,CRYSTAL,11.0592MHZ,SMD	1	U1
.....3	413-1206	CHIP,TEST POINT,1206,SMD	24	TP1, TP2, TP3, TP4, TP5, TP6, TP7, TP8, TP9, TP10, TP11, TP12, TP13, TP14, TP15, TP101, TP102, TP103, TP104, TP105, TP106, TP107, TP108, TP109
.....3	417-2502-FER	RCPT,25 PIN D,FEMALE,FERITE FILTER	4	J1, J2, J101, J102
.....3	417-2600	CONN,HEADER,26PIN	2	J5, J105
.....3	417-2804-001	SOCKET, 28 PIN IC, SMD	2	XU5, XU105
.....3	417-4004	CONN,HEADER,2 PIN	1	J8
.....3	417-8809	CONN, 9 PIN D, FEMALE, FILTERED	4	J3, J4, J103, J104
.....3	418-0255	CONN,MALE,4PIN	1	J6
.....3	418-8825	CONN,25 PIN D, MALE, FILTERED	1	J7
.....3	431-1600	SOCKET,16-PIN,DIP,SMD note	4	XU12, XU13, XU112, XU113
.....3	431-2000	SOCKET,20-PIN,DIP,SMD	2	XU4, XU104
.....3	431-3200	SOCKET,32-PIN,PLCC,SMD note	2	XU7, XU107
.....3	431-4400	SOCKET,44-PIN,PLCC,SMD note	4	XU2, XU8, XU102, XU108
.....3	519-0515	PCB MACH,MODULE CONTROL,FM-10S	1	
.....3	979-0515-004	KIT,SOFTWARE,FM10S MOD CONT PAL U4	2	U4, U104
.....4	220-0050	IC,PLD,64X32 AND-ARRAY,GAL16V8D-7LP	1	U4, U104
.....3	979-0515-005	KIT,SOFTWARE,FM10S MOD CONT ROM U5	2	U5, U105
.....4	229-7256	IC,CMOS,32K X 8 EPROM	1	U5, U105
.....3	979-0515-007	KIT, SOFTWARE,FM-10S MODULE CONTROL FLASH	2	U7, U107
.....4	229-8512	EC,FLASH MEMORY,64K x 8,PLCC	1	
....2	919-0524	ASSY, AC LINE FAULT INDICATOR PCB	1	
.....3	323-9217	IND,LED,RED 521-9240	3	DS1, DS2, DS3
.....3	407-0074	SPR,LED .25 ODX.147 1D X.22L	3	XDS1, XDS2, XDS3

BOM LEVEL	PART NO.	DESCRIPTION	QTY	REF. DES.
.....3	417-0677	CONN,PCB MT,6PIN MALE	1	J1
.....3	519-0524	MACH, AC LINE FAULT INDICATOR PCB	1	
....2	919-0527	ASSY, PCB, I/O, FM-10S, FM-20S	1	
.....3	031-2033	CAP,MYLAR FILM,.0022uF,100V,10%	8	C9, C10, C11, C12, C13, C14, C15, C16
.....3	100-1031	RES,100 OHM,1/4W,1%,METAL	10	R12, R13, R14, R15, R16, R17, R18, R19, R20, R21
.....3	103-1021	RES,10 OHM,1/4W,1%,METAL	5	R22, R23, R24, R25, R26
.....3	201-0007	ZENER VOLTAGE SUPPRESSOR, 7.5V	6	D1, D2, D3, D4, D5, D6
.....3	201-0015	ZENER VOLTAGE SUPPRESSOR,15V	38	D7, D8, D9, D10, D11, D12, D13, D14, D15, D16, D17, D18, D19, D20, D21, D22, D23, D24, D25, D26, D27, D28, D29, D30, D31, D32, D33, D34, D35, D36, D37, D38, D39, D40, D41, D42, D43, D44
.....3	411-0001	FILTER,EMI 10,000PF 3PIN	71	FL1, FL2, FL3, FL4, FL5, FL6, FL7, FL8, FL9, FL10, FL11, FL12, FL13, FL14, FL15, FL16, FL17, FL18, FL19, FL20, FL21, FL22, FL23, FL24, FL25, FL26, FL27, FL28, FL29, FL30, FL31, FL32, FL33, FL34, FL35, FL36, FL37, FL38, FL39, FL40, FL41, FL42, FL43, FL44, FL45, FL46, FL47, FL48, FL49, FL50, FL51, FL52, FL5
.....3	417-0902	RCPT, 9 PIN D, MALE	2	J1, J2
.....3	417-1513	RCPT,15 PIN D, FEMALE	1	J9
.....3	417-2010	SOCKET, STRIP, 20 POSITION, SINGLE ROW	1	J6
.....3	417-2502	RCPT,25 PIN D, FEMALE	1	J3
.....3	417-3704	RCPT,37 PIN D,FEMALE	2	J4, J5
.....3	417-5017	HEADER,50-PIN,RT ANGLE,.100 CENTERS	1	J8
.....3	417-5018	HEADER, 60 PIN,RT ANGLE, .100 CENTERS	1	J7
.....3	519-0527	PCB, MACH I/O, FM-20S	1	
....2	919-0528	ASSY, PCB, REMOTE INTERFACE, FM-20S	1	
.....3	003-1054	CAP,CER,MNLY,.1uF,50V,20%	1	C1
.....3	103-1435	RES,14.3K OHM,1/4W,1%,METAL	2	R1, R2
.....3	412-1600	BARR STP,16 POS,BEAU	1	TB2
.....3	412-3000	BARR STP,30 POS,BEAU61-5-30-50	1	TB1

BOM LEVEL	PART NO.	DESCRIPTION	QTY	REF. DES.
.....3	417-0677	CONN,PCB MT,6PIN MALE	1	J3
.....3	418-0900	CONN,9 PIN 640501-5 AMP	2	J1, J2
.....3	418-3704-FER	CONNECTOR, 37 PIN D, MALE, FER FIL	1	J4
.....3	418-8825	CONN,25 PIN D, MALE, FILTERED	1	J5
.....3	519-0528	PCB, MACH, REMOTE INTERFACE, FM-20S	1	
.....3	601-0022	WIRE,AWG22,BUSS	0.25	W2, W3, W4
....2	919-0529-001	ASSY, DIRECTIONAL COUPLER PCB, FM-10S	1	
.....3	031-2033	CAP,MYLAR FILM,.0022uF,100V,10%	5	C8, C16, C23, C28, C31
.....3	041-1031	CAP,MICA,1000PF,100V,1%	1	C1
.....3	042-3922	CAP,MICA,390PF,100V,5%	21	C2, C3, C4, C5, C6, C7, C10, C12, C15, C17, C18, C19, C20, C21, C22, C24, C25, C26, C27, C29, C30
.....3	100-1051	RES,10K OHM,1/4W,1%	14	R6, R7, R10, R11, R15, R19, R22, R23, R26, R27, R30, R31, R34, R35
.....3	103-1626	RES,162K OHM,1/4W,1%,METAL	1	R2
.....3	103-4753	RES,475 OHM,1/4W,1%,METAL	7	R8, R9, R17, R24, R25, R32, R33
.....3	103-4996	RES,499K OHM,1/4W,1%,METAL	2	R1, R3
.....3	130-5621	RES,56 OHM,2W,5%	7	R4, R5, R13, R20, R21, R28, R29
.....3	201-2800	DIODE,HOT CARRIER	15	D43, D44, D45, D46, D47, D50, D51, D52, D53, D54, D55, D56, D57, D58, D59
.....3	360-0022	CHOKE,RF 430MA RES FREQ 115MHZ	21	L1, L2, L3, L4, L5, L6, L10, L11, L12, L13, L14, L15, L16, L17, L18, L19, L20, L21, L22, L23, L24
.....3	417-0259	CONN, BNC PCB MOUNT	3	J9, J10, J12
.....3	417-2010	SOCKET, STRIP, 20 POSITION, SINGLE ROW	1	J1
.....3	519-0529	PCB, MACH, DIRECTIONAL COUPLER, FM-20S	1	
....2	919-0530	ASSY, PCB, FRONT PANEL, FM-20S (SBCM)	1	
.....3	007-1044	CAP,CER,0.1uF,50V,10%,SMD note	12	C1, C2, C4, C5, C6, C7, C10, C11, C12, C13, C14, C15
.....3	070-1064	CAP,TANT,10uF,35V,20%,SMD	1	C3
.....3	100-1531	RES,150 OHM,1/4W,1%	7	R1, R2, R3, R4, R5, R6, R7
.....3	102-1001	RES,CHIP,1.00K OHMS,1/10W,1%,SMD	2	R8, R9
.....3	102-1002	RES,CHIP,10.0K OHMS,1/10W,1%,SMD	5	R23, R24, R25, R26, R27
.....3	103-1021	RES,10 OHM,1/4W,1%,METAL	11	R10, R12, R14, R15, R16, R17, R18, R19, R21, R22, R30

BOM LEVEL	PART NO.	DESCRIPTION	QTY	REF. DES.
.....3	103-1212	RES,METAL FILM,12.1 OHMS,1/4W,1%	1	R29
.....3	103-1782	RES,17.8 OHM,1/4W,1%,METAL	3	R11, R13, R20
.....3	179-1053	RES,TRMR,10K,10 TURN	1	R28
.....3	204-0015	TRANSZORB,15V,SMD	9	D1, D2, D3, D4, D5, D6, D7, D8, D9
.....3	224-2003	IC,DRIVER,ULN2003A,SMD	1	U5
.....3	224-4070	IC,CD4070 QUAD XOR,CMOS,SMD	1	U4
.....3	224-7211	IC,4 DIGIT LCD DRIVER,ICM7211	1	U3
.....3	229-2210-001	IC,ISPGAL22V10C,PLCC (N)	1	U2
.....3	229-8255-001	IC,82C55A,PERIPH I/F,PLCC	1	U1
.....3	320-0021	DISP,LCD,4-DIGIT,0.7	1	DS1
.....3	320-0037	LED,RED,DIFFUSED CHIMNEY	5	DS2, DS3, DS4, DS5, DS6
.....3	320-0322	LED,GREEN,DIFFUSED CHIMNEY	2	DS7, DS8
.....3	340-0004	SW,JUMPER PROGRAMMABLE	2	P4, P5
.....3	340-0139	SW,PB,MOM,LED ILLUMINATED,YEL	10	S3, S5, S6, S7, S8, S9, S10, S12, S13, S16
.....3	340-0140	SW,PB,MOM,LED ILLUMINATED,GRN	1	S1
.....3	340-0143	SW,PB,MOM,LED ILLUMINATED,RED	3	S2, S4, S11
.....3	340-2522	SWITCH, ENCODER,ROTARY,GRAYHILL	2	S14, S15
.....3	413-1206	CHIP,TEST POINT,1206,SMD	1	TP1
.....3	417-0003	CONN,HEADER 3 PIN	3	J1, J2, J5
.....3	417-0179	HEADER,10-PIN,.1 SP,W/LATCHES	1	J12
.....3	417-0200	CONN,HEADER 20 PIN	1	J4, J10
.....3	417-0227	CONN,HEADER,50-PIN MALE	1	J11
.....3	417-2837	HEADER 8-PIN .100 R.ANGLE LOCKING"	1	J3
.....3	519-0530	PCB, MACH, FRONT PANEL, FM-20S	1	
....2	919-0531	ASSY, PCB, SUPERVISOR, S SERIES (SBCM)	1	
.....3	006-1075	CAP,LYTIC,10uF,50V,20%,SMD note	2	C114, C115
.....3	006-4755	CAP,ELECTRO,4.7UF,10%,35V,SMD	15	C48, C61, C62, C65, C66, C67, C68, C69, C70, C71, C72, C113, C122, C123, C124
.....3	007-1022	CAP,CER,100pF,50V,2%,SMD	34	C19, C20, C21, C22, C23, C24, C25, C26, C85, C86, C87, C88, C89, C90, C91, C92, C96, C97, C98, C99, C100, C101, C102, C103, C104, C105, C106, C107, C117, C118, C127, C128, C129, C130

BOM LEVEL	PART NO.	DESCRIPTION	QTY	REF. DES.
.....3	007-1044	CAP,CER,0.1uF,50V,10%,SMD note	49	C1, C2, C3, C4, C5, C6, C7, C10, C11, C12, C13, C14, C15, C16, C17, C18, C27, C28, C45, C46, C47, C52, C53, C54, C55, C56, C57, C58, C59, C76, C78, C79, C80, C81, C82, C83, C84, C93, C94, C95, C108, C109, C111, C112, C116, C125, C126, C131, C137
.....3	007-1054	CAP,CER,1uF,50V,10%,SMD	32	C8, C9, C29, C30, C31, C32, C33, C34, C35, C36, C37, C38, C39, C40, C41, C42, C43, C44, C60, C63, C64, C73, C74, C75, C77, C119, C120, C132, C133, C134, C135, C136
.....3	007-3923	CAP,CER,390pF,100V,5%,SMD	4	C49, C50, C51, C110
.....3	102-1000	RES,CHIP,100 OHMS,1/10W,1%,SMD	7	R58, R153, R154, R207, R208, R209, R210
.....3	102-1001	RES,CHIP,1.00K OHMS,1/10W,1%,SMD	17	R6, R7, R16, R17, R18, R19, R104, R105, R106, R107, R108, R109, R110, R111, R224, R231, R232
.....3	102-1002	RES,CHIP,10.0K OHMS,1/10W,1%,SMD	97	R1, R2, R3, R4, R5, R12, R13, R14, R15, R20, R23, R24, R28, R29, R30, R31, R32, R33, R34, R37, R40, R43, R46, R49, R52, R55, R63, R64, R65, R66, R67, R68, R69, R70, R71, R72, R73, R74, R75, R76, R77, R78, R79, R80, R81, R82, R83, R84, R85, R86, R87, R88, R89, R90, R96, R97, R100, R102, R103, R112, R113, R114, R115,
.....3	102-1003	RES,CHIP,100K OHMS,1/10W,1%,SMD	2	R8, R91
.....3	102-1331	RES,CHIP,1.33K OHMS,1/10W,1%,SMD	6	R25, R26, R94, R95, R168, R169
.....3	102-1553	RES,CHIP,15.0K OHMS,1/10W,1%,SMD	1	R59

BOM LEVEL	PART NO.	DESCRIPTION	QTY	REF. DES.
.....3	102-2001	RES,CHIP,2.00K OHMS,1/10W,1%,SMD	41	R9, R21, R35, R38, R41, R44, R47, R50, R53, R56, R129, R130, R131, R132, R133, R134, R135, R136, R137, R138, R139, R140, R190, R192, R193, R194, R195, R196, R197, R198, R199, R200, R201, R202, R215, R216, R222, R233, R234, R235, R236
.....3	102-2002	RES,CHIP,20.0K OHMS,1/10W,1%,SMD	3	R205, R211, R212
.....3	102-2431	RES,CHIP,2.43K OHMS,1/10W,1%,SMD	5	R60, R61, R62, R155, R163
.....3	102-2742	RES,CHIP,27.4K,1/10W,1%,SMD	1	R10
.....3	102-3304	RES,CHIP,3.3M,1/10W,10%,SMD	34	R36, R39, R42, R45, R48, R51, R54, R57, R120, R121, R122, R123, R124, R125, R126, R127, R141, R142, R143, R144, R145, R146, R147, R148, R149, R150, R151, R152, R188, R191, R218, R219, R220, R221
.....3	102-3322	RES,CHIP,33.2 K,1/10W,1%,SMD	6	R92, R93, R160, R161, R164, R165
.....3	102-4421	RES,CHIP,4.42K OHMS,1/10W,1%,SMD	1	R128
.....3	102-5041	RES,4.99K OHM,1/10W,1%	10	R11, R22, R98, R99, R101, R170, R171, R203, R204, R206
.....3	102-6341	RES,CHIP,6.34K,1/10W,1%,SMD	1	R229
.....3	198-1054	TRMR,10K OHMS,TOP ADJ,SMD (N)	1	R27
.....3	204-0914	DIODE,SWITCHING,MMBD914LT1,SMD	2	D2, D4
.....3	216-0074	IC,TL074CD,QUAD OP AMP,SMD	5	U14, U15, U27, U31, U32
.....3	216-7002	IC,MOSFET,2N7002LT1,SMD	9	Q1, Q2, Q3, Q4, Q5, Q6, Q7, Q8, Q9
.....3	224-0244	IC,74HC244,OCTAL/LINE DRIVERS,SMD	1	U50
.....3	224-0351	IC,ANALOG SWITCH (NOTE)	1	U1
.....3	224-0552	IC,DUAL UART,FIFO,PRINTER PORT,SMD	1	U19
.....3	224-2410	IC,RS-232 MULTI-TRANSCEIVER,,SMD	3	U20, U21, U22
.....3	224-7225	IC,QUAD D/A,8 BIT,TLC7225	3	U33, U34, U47
.....3	224-7548	IC, D/A CONVERTER, 12 BIT, PLCC	4	U8, U24, U25, U26

BOM LEVEL	PART NO.	DESCRIPTION	QTY	REF. DES.
.....3	229-0033	IC,OPTOIS,4N33	25	U10A, U10B, U11A, U11B, U12A, U12B, U13A, U13B, U16A, U16B, U40A, U40B, U41A, U41B, U42A, U42B, U43A, U43B, U44A, U44B, U45A, U45B, U48A, U49A, U49B
.....3	229-0111	IC,AC INPUT OPTO-ISOLATOR	9	U35A, U35B, U36A, U36B, U37A, U37B, U38A, U38B, U48B
.....3	229-0158	IC,A/D AND MUX,SMD	3	U28, U29, U30
.....3	229-8255-001	IC,82C55A,PERIPH I/F,PLCC	4	U6, U7, U9, U39
.....3	231-0136	IC,VOLT REF,2.5V,8-PIN SOIC	1	D1
.....3	231-7905	VR,LM79L05AC,NEG VOLT,100mA,SMD	1	U46
.....3	340-0004	SW,JUMPER PROGRAMMABLE	18	P9, P10, P11, P15, P16, P17, P18, P19, P20, P21, P22, P23, P24, P25, P26, P27, P28, P29
.....3	342-3304	SW,TACT,SPST,N.O.,SMD,RECESSED	1	S1
.....3	350-2032	CELL,BATTERY,3V,190MAH,LITHIUM	1	
.....3	390-0054	OSC,CRYSTAL,1.8432MHZ,SMD	1	U18
.....3	408-0050	HEADER,50-PIN,.100 CENTERS,SMD	2	J2, J8
.....3	408-0300	HEADER,3-PIN,.100 CENTERS,SIP,note	13	J9, J10, J16, J17, J18, J19, J20, J21, J22, J26, J27, J28, J29
.....3	408-1200	HEADER,12-PIN,.100 CENTERS,DIP,note	0.5	J23
.....3	408-6000	CONNECTOR, HEADER, 60 PIN, SMD	1	J7
.....3	413-1206	CHIP,TEST POINT,1206,SMD	2	TP1, TP2
.....3	415-2032	HOLDER,BATTERY FOR CR-2032,SMD	1	
.....3	417-0200	CONN,HEADER 20 PIN	1	J11, J12, J13, J15
.....3	417-2600	CONN,HEADER,26PIN	4	J3, J4, J5, J6
.....3	417-4042	RCPT,40POS,2ROW,PCB,SAMTEC	1	J1
.....3	420-2104	SCREW,2-56X.250,S.S. PH SC	2	
.....3	423-2003	#2 LOCK S.S. INT TOOTH WASHER	2	
.....3	431-1400	SOCKET,14-PIN,DIP,SMD	17	XU10, XU11, XU12, XU13, XU16, XU35, XU36, XU37, XU38, XU40, XU41, XU42, XU43, XU44, XU45, XU48, XU49
.....3	431-2800	SOCKET,28-PIN,PLCC,SMD	5	XU2, XU3, XU4, XU5, XU17
.....3	441-0198	STOFF,ALUM 5/32 HEX,.437"LG,#2-56"	1	
.....3	519-0531	PCB, MACH, SUPERVISOR	1	
.....3	979-0518-003	KIT,SOFTWARE,FM10S SUPERVISOR U3	1	U3
.....4	229-2210-2	IC,PAL ERASABLE	1	U3
.....3	979-0518-004	KIT,SOFTWARE,FM10S SUPERVISOR U4	1	U4
.....4	229-2210-2	IC,PAL ERASABLE	1	U4

BOM LEVEL	PART NO.	DESCRIPTION	QTY	REF. DES.
.....3	979-0518-005	KIT,SOFTWARE,FM10S SUPERVISOR U5	1	U5
.....4	229-2210-2	IC,PAL ERASABLE	1	U5
.....3	979-0523-017	KIT, SOFTWARE, FM-10S SUPERVISOR U17	1	U17
.....4	229-2210-2	IC,PAL ERASABLE	1	U17
.....3	979-0526-002	KIT, SOFTWARE, FM-20S SUPERVISOR U2	1	U2
.....4	229-2210-2	IC,PAL ERASABLE	1	U2
....2	949-0425	ASSY,RIBBON CABLE,FM10S(NOTE) (SBCM)	1	
.....3	417-0180	CONN,FEM,10 PIN	1	
.....3	417-0181	CONN,MALE,9 PIN	9	
.....3	417-0228	CONN,50-PIN,FEMALE,TRANSITION	4	
.....3	417-3334	CONN, 60 PIN, RIBBON	2	
.....3	418-2600	CONN,26-PIN,RIBBON	4	
.....3	600-0002	RIBBON CBL,3580-10 ALPHA	2	
.....3	600-0026	CBL,FLAT,26-COND,28GA	0.9	
.....3	600-0050	CBL,RIBBON 50 COND 3365 SER.	1.6	
.....3	610-1184	CBL,60COND,28GA,ANSLEY	0.5	
....2	949-0426	ASSY,DC POWER & DATA CABLE, FM10S(SBCM)	1	
.....3	402-0051	TY-RAP, W/FLAG	32	
.....3	410-0004	LUG,COPPER,#2 3/8	8	
.....3	410-0005	LUG,COPPER #1/0 3/8	4	
.....3	410-0008	LUG,COPPER I/O WELD 1/4	4	
.....3	410-1015	LUG,COPPER #2 1/4	8	
.....3	600-0001	WIRE,1/0,1057/30,300 AMP	13.87	
.....3	610-0206	CBL,AWG2 WELDING BLK NEOPRENE	30.02	
.....3	690-0221	TUB,BLK HEAT SHRINK 3/4	0.74	
.....3	690-0221-RED	TUB,RED,HEAT SHRINK, 0.75" 1.740 " "		
.....3	849-0901	CBL ASSY,COMPUTER,DB9-DB9,M/M,6FT	2	
.....3	849-0902	CBL ASSY,COMPUTER,DB9-DB9,M/F,6FT	4	
.....3	849-2501	CBL ASSY,COMPUTER,DB25-DB25 M/M,6FT	4	
.....3	849-2525	CBL,COMPUTER DATA,DB25-DB25 M/M,2FT	4	
.....3	849-3701	CBL ASSY,COMPUTER,DB37-DB37 M/F,3FT	1	
....2	949-0427	ASSY,WIRE HARNESS,FM10S (NOTE) (SBCM)	1	
.....3	402-0000	TY-RAP	40	
.....3	402-0051	TY-RAP, W/FLAG	9	
.....3	417-0053	SKT,CONN 641294-1 AMP	13	
.....3	417-0059	CONN,9 PIN 1-640521-0 AMP	1	
.....3	417-0138	HSNG,MOD IV 4 POS 87499-7 AMP	2	
.....3	417-0142	PIN,.050 DIA 26-22 745254-3	56	
.....3	417-0143	SKT,PIN .050 26-22 745253-3	44	
.....3	417-0224	KEYING PLUG MOD IV 87077 AMP	2	
.....3	417-0251	PLUG,25 PIN 207464-1 AMP	1	
.....3	417-0252	RCPT,25 POS 207463-1 AMP	2	
.....3	417-2510	KIT,BACKSHELL FOR 25PIN D CONN	3	
.....3	417-3710	KIT,BACKSHELL FOR 37PIN D CONN	1	
.....3	417-3711	CONN SHELL,37-PIN D,MALE	1	
.....3	417-8766	CONTACT,CRIMP,MOD-IV 87809-1	6	
.....3	418-0240	PLUG,FEM,4PIN	2	
.....3	601-2209	WIRE,AWG22,7/30 WHT	0.5	
.....3	608-0002	CBL,8 COND,SH,AWG 24,7/32	9.41	

BOM LEVEL	PART NO.	DESCRIPTION	QTY	REF. DES.
.....3	610-8459	CBL,25 CONDUCTOR,AWG22,7/30	6.5	
.....3	611-0061	TUB,HT SHK CLEAR 3/64	1.5	
.....3	611-1250	TUB,HT SHK,1/8	0.334	
.....3	611-1875	TUB,HT SHK,3/16	0.25	
.....3	611-2500	TUB,HT SHK,1/4	0.6	
.....3	622-8444	WIRE,4COND,BELD 8444	19.7	
.....3	693-0002	SLVG,1/4 EXPANDO FR BLACK"	5	
.....3	693-0003	SLVG,1/2	1.475	
....2	949-0428	ASSY,RF CABLE,FM-10S (SBCM)	1	
.....3	417-0095	CONN,BNC RG/U142 31-326 AMPH	8	
.....3	417-0120	PLUG,STRAIGHT N	6	
.....3	418-0031	PLUG,N FOR RG-58/142B/U	2	
.....3	611-3750	TUB,HT SHK,3/8	0.4	
.....3	611-5000	TUB,HT SHK 1/2	0.25	
.....3	621-0001	CBL,COAX TEFLON RG 142B/U BELD	10.67	
.....3	621-1361	CBL,COAX,RG393/M17-127 50 OHM	6.75	
....2	949-0431	ASSY, CABLE, 10S, TX LINE GND 10IN	1	
.....3	410-1493	LUG,TERM #6 RECT 12-10 329697	1	
.....3	614-8474	CBL,BELD 8668	0.833	
....2	949-0517	HARNESS, FRONT PANEL, FM10S (SBCM)	2	
.....3	417-0003-001	HSNG,3 PIN 87499-5 AMP	2	P1, P2
.....3	417-8766	CONTACT,CRIMP,MOD-IV 87809-1	6	
.....3	601-2209	WIRE,AWG22,7/30 WHT	0.5	
....2	959-0082-040	ASSY,DIRECTIONAL COUPLER,40DB	1	
....2	959-0082-045	ASSY,DIRECTIONAL COUPLER,45DB	2	
....2	959-0414-002	ASSY,LOW PASS FILTER,FM-10S	2	
.....3	402-0008	MTG DEVICE,FOR #6SCR,TIE CBL	1	
.....3	417-0016	CONN,BNC,RF,UG1094A/U,AMPHENOL	1	
.....3	420-6508	SCREW,6-32X.500,S.S. PH FH	14	
.....3	421-1113	RIV,CLOSED-END .125 X .316L	1	
.....3	421-6008	6-32 KEP NUT	2	
.....3	421-8002	8-32 HEX NUT, BRASS	2	
.....3	422-6106	SCREW,SEMS 6-32 X 3/8 PAN PH. ST."	4	
.....3	423-8006	#8 LOCK INT TOOTH	2	
.....3	471-0980-009	COVER,LOW PASS FILTER,(UNSCREENED)	1	
.....3	471-0981	SPACER,LOW PASS FILTER,FM3C	1	
.....3	471-0982	FRAME,LOW PASS FILTER,FM3C	1	
.....3	594-0039	LABEL,WARNING PS CAB	1	
.....3	919-0421-002	ASSY,PCB,LOW PASS FILTER, FM-10S	1	
.....4	003-2201	CAP,CER,MNLY,2.2pF,100V,0.25pF	2	C14, C15
.....4	003-2753	CAP,CER,27PF,100V,2%	1	C11,
.....4	003-6812	CAP,CER,68PF,50V,5%	1	C8,
.....4	042-3922	CAP,MICA,390PF,100V,5%	4	C9, C10, C12, C13,
.....4	100-1041	RES,1K OHM,1/4W,1%	1	R1
.....4	103-1062	RES,100K OHM,1/4W,1%,METAL	1	R5,
.....4	103-6654	RES,665K OHM,1/4W,1%,METAL	2	R2, R6,
.....4	122-1241	RES,124 OHM,2W,1%,METAL FILM	2	R3, R4
.....4	122-1581	RES,158 OHM,2W,1%,METAL FILM	2	R7, R8
.....4	177-1044	RES,TRMR,1K,25TURN,TOP ADJ	1	R9,
.....4	201-2800	DIODE,HOT CARRIER	2	D1, D2,
.....4	360-0145	COIL,L1,FM-1C LPF (SBCM)	1	L1,
.....5	640-1200	WIRE,12GA,MAGNET	0.035	

BOM LEVEL	PART NO.	DESCRIPTION	QTY	REF. DES.
.....4	364-0023	COIL,MOLDED,.023UH,MILLER	1	L2,
.....4	417-0214	CONN,HEADER 20 PIN R.ANGLE	0.2	J23,
.....4	426-6000	PEM NUT,#6-32 KFS2-632	14	
.....4	426-8008	STUD,PEM,KFH-832-5ET,PCB MOUNT	2	
.....4	471-5035	INDUCTOR,LOW PASS FILTER,FM5C	1	
.....4	519-0421	LOW PASS FILTER,FM-3C	1	
.....4	601-0022	WIRE,AWG22,BUSS	0.2	
....2	959-0501	ASSY,8-WAY COMBINER A (LEFT),FM-10S (NOTE)	1	
.....3	402-0008	MTG DEVICE,FOR #6SCR,TIE CBL	2	
.....3	409-0123	SCR,POLYPRO,10-32x1-1/2,PAN HD,SLOT	7	
.....3	409-0124	NUT,ULTEM 2300(NATURAL) 10-32	1	
.....3	417-0017	RECP,BNC,BULKHEAD,UG-492A/U	2	
.....3	417-0392	RECP,N TYPE FEMALE,PANEL MT	8	
.....3	418-0035	ADPTR,JACK-JACK 82-66 AMPHENOL	2	
.....3	420-0302	SCREW,6-32X.250,BR PH SC	8	
.....3	420-4104	SCREW,4-40X.250,S.S. PH	4	
.....3	420-4114	SCREW,4-40X.875,S.S. PH	22	
.....3	420-6002	SCREW,6-32X.437,S.S. PH FH UC	5	
.....3	420-8121	SCREW,8-32X.375,BR PH	9	
.....3	421-0801	#10-32 BR HEX NUT	6	
.....3	421-1111	RIV,1/8X.422L .126-.187GR CLOS	2	
.....3	421-1113	RIV,CLOSED-END .125 X .316L	8	
.....3	421-4008	4-40 KEP NUT	32	
.....3	421-6908	SHEET EDGE CONNECTOR 6-32	113	
.....3	422-6106	SCREW,SEMS 6-32 X 3/8 PAN PH. ST."	5	
.....3	422-6107	SCREW,SEMS 6-32 X 7/16 PAN PH.ST."	112	
.....3	423-1016	#6 LOCK INT TOOTH	8	
.....3	423-4002	#4 LOCK S.S. SPLIT	22	
.....3	423-6000	#6 FLAT .375 X .144 X .030	8	
.....3	423-8006	#8 LOCK INT TOOTH	9	
.....3	426-6000	PEM NUT,#6-32 KFS2-632	8	
.....3	441-0197	SPR, .46.002THK, POLYPROPYLENE"	13	
.....3	441-0199	STOFF,COMBINER,SUMO	1	
.....3	441-0210	SPACER,.300 .002 THK,NYLON 6/6"	44	
.....3	441-0593	STOFF,COMBINER,FM3C,.593LONG"	1	
.....3	471-5200	SHIELD,RELAY,8-WAY COMBINER,SUMO	4	
.....3	471-5201	CHANNEL,COIL,8-WAY COMBINER,SUMO	4	
.....3	471-5202	ANGLE,COIL,8-WAY COMBINER,SUMO	2	
.....3	471-5203	COVER,LEFT REAR,8-WAY COMBINER,SUMO	1	
.....3	471-5205	COVER,FRONT,8-WAY COMBINER,SUMO	1	
.....3	471-5206	PANEL,LEFT,8-WAY COMBINER,SUMO	1	
.....3	471-5207	PANEL,INSIDE,8-WAY COMBINER,SUMO	1	
.....3	471-5208	END,8-WAY COMBINER,SUMO	2	
.....3	471-5209	PARTITION,LEFT,8-WAY COMBINER,SUMO	1	
.....3	471-5210	STRAP,OUTPUT,8-WAY COMBINER,SUMO	1	
.....3	471-5218	ANGLE,OUTPUT STRAP,8-WAY COMBINER,S	1	
.....3	471-5246	CHANNEL,RELAY,8 WAY COMBINER,SUMO	2	
.....3	471-5247	CHANNEL,CRACK,SUMO	1	
.....3	519-0501	PCB,MACH,8-WAY CONBINER,FM-10S	1	

BOM LEVEL	PART NO.	DESCRIPTION	QTY	REF. DES.
.....3	919-0502-001	PCB,ASSY,COMB INPUT,BTM LEFT,FM-10S	1	
.....4	003-1066	CAP,CER,MNLY,.1uF,50V,10% *NOTE*	9	C1, C2, C3, C4, C5, C6, C7, C8, C9
.....4	203-4005	DIODE,1N4005	4	D1, D2, D3, D4
.....4	270-1255	RELAY,PCB,SPST-NO, 12VDC	4	K1, K2, K3, K4
.....4	360-0158	COIL,COMBINER INPUT PCB,FM-10C	4	L1, L2, L3, L4
.....4	411-0001	FILTER,EMI 10,000PF 3PIN	5	FL1, FL2, FL3, FL4, FL5
.....4	417-1094	RECP,DB-9.STRAIGHT PCB MT	1	J1
.....4	420-4103	SCREW,4-40X.187,S.S. PH	2	
.....4	426-8010	STUD,PEM,KFH-440-4ET,PCB MOUNT	2	
.....4	441-8402	STOFF,ALUM 1/4HEX X 7/16 #4-40	2	
.....4	519-0502	PCB,MACH,COMBINER INPUT,FM-10S	1	
.....3	919-0502-002	PCB,ASSY,COMB INPUT,TOP LEFT,FM-10S	1	
.....4	003-1066	CAP,CER,MNLY,.1uF,50V,10% *NOTE*	9	C1, C2, C3, C4, C5B, C6B, C7B, C8B, C9B
.....4	203-4005	DIODE,1N4005	4	D1, D2, D3, D4
.....4	270-1255	RELAY,PCB,SPST-NO, 12VDC	4	K1, K2, K3, K4
.....4	360-0158	COIL,COMBINER INPUT PCB,FM-10C	4	L1, L2, L3, L4
.....4	411-0001	FILTER,EMI 10,000PF 3PIN	5	FL1B, FL2B, FL3B, FL4B, FL5B
.....4	417-1094	RECP,DB-9.STRAIGHT PCB MT	1	J1B
.....4	420-4103	SCREW,4-40X.187,S.S. PH	2	
.....4	426-8010	STUD,PEM,KFH-440-4ET,PCB MOUNT	2	
.....4	441-8402	STOFF,ALUM 1/4HEX X 7/16 #4-40	2	
.....4	519-0502	PCB,MACH,COMBINER INPUT,FM-10S	1	
....2	959-0501-001	ASSY,8-WAY COMBINER B(RIGHT),FM-10S	1	
.....3	402-0008	MTG DEVICE,FOR #6SCR,TIE CBL	2	
.....3	409-0123	SCR,POLYPRO,10-32x1-1/2,PAN HD,SLOT	7	
.....3	409-0124	NUT,ULTEM 2300(NATURAL) 10-32	1	
.....3	417-0392	RECP,N TYPE FEMALE,PANEL MT	8	
.....3	420-0302	SCREW,6-32X.250,BR PH SC	8	
.....3	420-4104	SCREW,4-40X.250,S.S. PH	4	
.....3	420-4114	SCREW,4-40X.875,S.S. PH	22	
.....3	420-6002	SCREW,6-32X.437,S.S. PH FH UC	5	
.....3	420-8121	SCREW,8-32X.375,BR PH	9	
.....3	421-0801	#10-32 BR HEX NUT	6	
.....3	421-1111	RIV,1/8X.422L .126-.187GR CLOS	2	
.....3	421-1113	RIV,CLOSED-END .125 X .316L	8	
.....3	421-4008	4-40 KEP NUT	32	
.....3	421-6908	SHEET EDGE CONNECTOR 6-32	105	
.....3	422-6106	SCREW,SEMS 6-32 X 3/8 PAN PH. ST."	5	
.....3	422-6107	SCREW,SEMS 6-32 X 7/16 PAN PH.ST."	100	
.....3	423-1016	#6 LOCK INT TOOTH	8	
.....3	423-4002	#4 LOCK S.S. SPLIT	22	
.....3	423-6000	#6 FLAT .375 X .144 X .030	8	
.....3	423-8006	#8 LOCK INT TOOTH	9	
.....3	426-6000	PEM NUT,#6-32 KFS2-632	8	
.....3	441-0197	SPR, .46.002THK, POLYPROPYLENE"	13	
.....3	441-0199	STOFF,COMBINER,SUMO	1	
.....3	441-0210	SPACER,.300 .002 THK,NYLON 6/6"	44	
.....3	441-0593	STOFF,COMBINER,FM3C,.593LONG"	1	

BOM LEVEL	PART NO.	DESCRIPTION	QTY	REF. DES.
.....3	471-5200	SHIELD,RELAY,8-WAY COMBINER,SUMO	4	
.....3	471-5201	CHANNEL,COIL,8-WAY COMBINER,SUMO	4	
.....3	471-5202	ANGLE,COIL,8-WAY COMBINER,SUMO	2	
.....3	471-5204	COVER,RIGHT REAR,8-WAY COMBINER,SUM	1	
.....3	471-5205	COVER,FRONT,8-WAY COMBINER,SUMO	1	
.....3	471-5207	PANEL,INSIDE,8-WAY COMBINER,SUMO	1	
.....3	471-5208	END,8-WAY COMBINER,SUMO	2	
.....3	471-5210	STRAP,OUTPUT,8-WAY COMBINER,SUMO	1	
.....3	471-5217	PARTITION,RIGHT,8-WAY COMBINER,SUMO	1	
.....3	471-5246	CHANNEL,RELAY,8 WAY COMBINER,SUMO	2	
.....3	471-5259	PANEL,RIGHT,8-WAY COMBINER,SUMO	1	
.....3	519-0501	PCB,MACH,8-WAY CONBINER,FM-10S	1	
.....3	919-0502-001	PCB,ASSY,COMB INPUT,BTM LEFT,FM-10S	1	
.....4	003-1066	CAP,CER,MNLY,.1uF,50V,10% *NOTE*	9	C1, C2, C3, C4, C5, C6, C7, C8, C9
.....4	203-4005	DIODE,1N4005	4	D1, D2, D3, D4
.....4	270-1255	RELAY,PCB,SPST-NO, 12VDC	4	K1, K2, K3, K4
.....4	360-0158	COIL,COMBINER INPUT PCB,FM-10C	4	L1, L2, L3, L4
.....4	411-0001	FILTER,EMI 10,000PF 3PIN	5	FL1, FL2, FL3, FL4, FL5
.....4	417-1094	RECP,DB-9.STRAIGHT PCB MT	1	J1
.....4	420-4103	SCREW,4-40X.187,S.S. PH	2	
.....4	426-8010	STUD,PEM,KFH-440-4ET,PCB MOUNT	2	
.....4	441-8402	STOFF,ALUM 1/4HEX X 7/16 #4-40	2	
.....4	519-0502	PCB,MACH,COMBINER INPUT,FM-10S	1	
.....3	919-0502-002	PCB,ASSY,COMB INPUT,TOP LEFT,FM-10S	1	
.....4	003-1066	CAP,CER,MNLY,.1uF,50V,10% *NOTE*	9	C1, C2, C3, C4, C5B, C6B, C7B, C8B, C9B
.....4	203-4005	DIODE,1N4005	4	D1, D2, D3, D4
.....4	270-1255	RELAY,PCB,SPST-NO, 12VDC	4	K1, K2, K3, K4
.....4	360-0158	COIL,COMBINER INPUT PCB,FM-10C	4	L1, L2, L3, L4
.....4	411-0001	FILTER,EMI 10,000PF 3PIN	5	FL1B, FL2B, FL3B, FL4B, FL5B
.....4	417-1094	RECP,DB-9.STRAIGHT PCB MT	1	J1B
.....4	420-4103	SCREW,4-40X.187,S.S. PH	2	
.....4	426-8010	STUD,PEM,KFH-440-4ET,PCB MOUNT	2	
.....4	441-8402	STOFF,ALUM 1/4HEX X 7/16 #4-40	2	
.....4	519-0502	PCB,MACH,COMBINER INPUT,FM-10S	1	
....2	959-0502	ASSY,2-WAY COMBINER,FM-10S	1	
.....3	409-0123	SCR,POLYPRO,10-32x1-1/2,PAN HD,SLOT	29	
.....3	409-0124	NUT,ULTEM 2300(NATURAL) 10-32	9	
.....3	417-0321	CONN,N FEM BULKHD RECPT REAR MT PRE	1	
.....3	419-0034	CONN,OUTP COUPLING LOOP	1	
.....3	420-0083	SCREW,3/8-16X1.250,BR BOLT	1	
.....3	420-3005	SCREW,5/16-18X1.000,S.S. BOLT	6	
.....3	421-0801	#10-32 BR HEX NUT	20	
.....3	421-5000	3/8-16 .325 THICK STANDARD	1	
.....3	421-6008	6-32 KEP NUT	2	
.....3	421-6908	SHEET EDGE CONNECTOR 6-32	44	

BOM LEVEL	PART NO.	DESCRIPTION	QTY	REF. DES.
.....3	421-8002	8-32 HEX NUT, BRASS	10	
.....3	422-6107	SCREW,SEMS 6-32 X 7/16 PAN PH.ST."	44	
.....3	423-1006	WASHER,FLAT,5/16 ZINC PLATED STEEL,.688 X .344 X .065	6	
.....3	423-1014	3/8 LOCK INT TOOTH (BRONZE)	1	
.....3	423-3000	5/16 LOCK SPLIT	6	
.....3	423-8006	#8 LOCK INT TOOTH	10	
.....3	426-8008	STUD,PEM,KFH-832-5ET,PCB MOUNT	10	
.....3	427-0001	FLANGE,3-1/8,301-014,MYAT	1	
.....3	441-0197	SPR, .46.002THK, POLYPROPYLENE"	29	
.....3	471-5219	SPACER PLATE,EDGE,10 KW COMBINER,SU	5	
.....3	471-5220	SPACER PLATE,END,10 KW COMBINER,SUM	2	
.....3	471-5221	TOP,10 KW COMBINER,SUMO	1	
.....3	471-5222	CHASSIS, 10 KW COMBINER, SUMO	1	
.....3	471-5223	COVER, 10 KW COMBINER, SUMO	1	
.....3	471-5224	STRAP,10 KW COMBINER,SUMO	2	
.....3	471-5225	STRAP, REJECT, 10 KW COMBINER, SUMO	1	
.....3	471-5226	STRAP, OUTPUT, 10 KW COMBINER, SUMO	1	
.....3	471-5227	STRAP, INPUT, 10 KW COMBINER, SUMO	2	
.....3	471-5270	PLATE, 10 KW COMBINER, SUMO	2	
.....3	471-5272	ANGLE,10 KW COMBINER,SUMO	1	
.....3	471-5274	PLATE,LARGE,10 KW COMBINER,SUMO	2	
.....3	471-5275	PLATE,SMALL,10 KW COMBINER,SUMO	1	
....2	959-0504	ASSY,MOTHERBDS*SPLITTER,FM-10S	1	
.....3	402-0000	TY-RAP	12	
.....3	417-0105	ADAPT,PLUG-JACK ANGLE N UG27CU	1	
.....3	418-0035	ADPTR,JACK-JACK 82-66 AMPHENOL	1	
.....3	420-6105	SCREW,6-32X.312,S.S. PH	4	
.....3	421-0801	#10-32 BR HEX NUT	18	
.....3	421-1003	1/4-20 HEX NUT	6	
.....3	421-6008	6-32 KEP NUT	2	
.....3	421-6908	SHEET EDGE CONNECTOR 6-32	16	
.....3	422-6107	SCREW,SEMS 6-32 X 7/16 PAN PH.ST."	42	
.....3	423-0007	#10 LOCK INT TOOTH	18	
.....3	423-1003	1/4-20 LOCK SPLIT	6	
.....3	423-6002	#6 LOCK SPLIT	4	
.....3	469-0365	FINGER STOCK,1S197520A	80	
.....3	471-5235	SIDE,PA BAY,SUMO	2	
.....3	471-5236	HORIZONTAL PANEL,PA BAY,SUMO	2	
.....3	471-5249	BUSBAR,5 WAY,SUMO	2	
.....3	471-5250	BUSBAR,4 WAY,SUMO	2	
.....3	700-0200	TAPE,WEAR,1/2WIDE,.045"THK"	0.024	
.....3	959-0503	ASSY,IPA SPLITTER,FM-10S	1	
.....4	417-0321	CONN,N FEM BULKHD RECPT REAR MT PRE	1	
.....4	417-0392	RECP,N TYPE FEMALE,PANEL MT	3	
.....4	420-6205	SCREW,6-32X1.250,S.S. PH	9	
.....4	421-4008	4-40 KEP NUT	12	
.....4	421-6008	6-32 KEP NUT	9	
.....4	421-6908	SHEET EDGE CONNECTOR 6-32	22	

BOM LEVEL	PART NO.	DESCRIPTION	QTY	REF. DES.
.....4	422-6107	SCREW,SEMS 6-32 X 7/16 PAN PH.ST."	4	
.....4	423-6002	#6 LOCK SPLIT	9	
.....4	441-0211	SPACER,.066 .001 THK, UTELM 1000"	9	
.....4	471-5214	CHASSIS,2-WAY SPLITTER,SUMO	1	
.....4	471-5215	COVER,2-WAY SPLITTER,SUMO	1	
.....5	471-5215-009	COVER,2-WAY SPLITTER,SUMO,UNSCREENED	1	
.....4	519-0503	PCB,MACH,IPA SPLITTER,FM-10S	2	
.....3	959-0504-001	ASSY,MOTHERBOARDS,FM10S	1	
.....4	131-5031	RES,100 OHM,250W,5%,BRAZED FLNG MNT	2	R109, R110
.....4	131-5032	RES,50 OHM,100W,5%,FLNG MNT	16	R101, R101, R102, R102, R103, R103, R104, R104, R105, R105, R106, R106, R107, 107, R108, R108
.....4	400-0014	GROMMET,3/8IDX5/8ODFOR7/16HOLE	1	
.....4	402-0833	CLAMP,CBL,1/4	2	
.....4	417-0044	CONN,10 PIN SINGLE ROW HEADER	2	J202, J202
.....4	417-0384	CONN,N" TYPE,MALE TO PIN, NO NUT"	3	J112, J112, J113
.....4	417-1253	RECP,DB-25,FILTERED,RT ANGLE PCB MT	4	J110, J111, J110, J111
.....4	418-3227	FEMALE SCREWLOCKS 207719-1 AMP	6	
.....4	420-4105	SCREW,4-40X.312,S.S. PH	12	
.....4	420-4306	SCREW,4-40X.375,S.S. SHCS	32	
.....4	420-6108	SCREW,6-32X.500,S.S. PH	2	
.....4	421-4008	4-40 KEP NUT	12	
.....4	421-6008	6-32 KEP NUT	2	
.....4	421-6908	SHEET EDGE CONNECTOR 6-32	12	
.....4	422-6107	SCREW,SEMS 6-32 X 7/16 PAN PH.ST."	18	
.....4	423-4002	#4 LOCK S.S. SPLIT	8	
.....4	423-6002	#6 LOCK SPLIT	2	
.....4	454-0002	RING,COMPRESSION,H.V.S.S.	2	
.....4	471-5212	CHANNEL,MOTHERBOARD,SUMO	1	
.....4	471-5213	ANGLE,D" CONNECTORS,SUMO"	2	
.....4	919-0504	PCB,ASSY,MOTHERBOARD,FM-10S	2	
.....5	009-4710-001	CAP,CER CHIP,4.7PF,0.1 PF,500V (NOTE)	4	C131, C134, C135, C136
.....5	009-4713	CAP,CER CHIP,47PF,500V,5%	8	C123, C124, C125, C126, C127, C128, C129, C130
.....5	009-5610-001	CAP,CER CHIP,5.6PF,0.1 PF,500V (NOTE)	1	C133
.....5	009-6210-001	CAP,CER CHIP,6.2PF,0.1PF,500V (NOTE)	1	C137
.....5	009-7510-001	CAP,CER CHIP,7.5PF,0.1PF,500V (NOTE)	2	C132, C138
.....5	020-4770	CAP,LYTIC,47UF,63V,STDUP	9	C101, C103, C105, C107, C109, C111, C113, C115, C117
.....5	030-1053	CAP,MYLAR FILM,.1uF,100V,RAD	9	C102, C104, C106, C108, C110, C112, C114, C116, C118
.....5	402-0000	TY-RAP	3	
.....5	402-0008	MTG DEVICE,FOR #6SCR,TIE CBL	4	

BOM LEVEL	PART NO.	DESCRIPTION	QTY	REF. DES.
.....5	417-3610	CONN,CARD EDGE,36 POS(18x2)BLK	9	J101, J102, J103, J104, J105, J106, J107, J108, J109
.....5	417-6310	CONN,ELEVATED SOCKET,10-PIN,SIP.635	1	J115
.....5	418-0255	CONN,MALE,4PIN	1	J114
.....5	421-4001	4-40 S.S. HEX NUT	4	
.....5	421-4008	4-40 KEP NUT	4	
.....5	423-6007	FLAT .250 X .150 X .065	4	
.....5	426-4003	NUT,PEM 4-40 KFS2-440	4	
.....5	426-4008	STOFF,PEM 4-40 KFSE-440-12	1	
.....5	426-6000	PEM NUT,#6-32 KFS2-632	2	
.....5	426-8010	STUD,PEM,KFH-440-4ET,PCB MOUNT	8	
.....5	519-0504	PCB,MACH,MOTHERBOARD,FM-10S	1	
.....5	519-0510-002	PCB,MACH,MOTHERBOARD SHIELD,FM-10S	1	
.....6	519-0510	PCB,MACH,MOTHERBOARD SHIELD, BREAKAWAY PCB, FM10S	0.985	
.....5	601-0022	WIRE,AWG22,BUSS	3.5	
.....5	693-0220	TUB,TEFLON,TW,AWG22 NTL	3.5	
.....5	919-0506	PCB,ASSY,RF INPUT,MOTHERBD, FM-10S	1	
.....6	009-4713	CAP,CER CHIP,47PF,500V,5%	1	C119
.....6	096-0011	CAP,TRMR,CER,5.5-18PF,350V,NPO	1	C120
.....6	519-0506	PCB,MACH,RF INPUT,MOTHERBOARD,FM-10	1	
.....4	919-0510-001	PCB,ASSY,MBD DC CONNECTOR,FM-10S	2	
.....5	003-1066	CAP,CER,MNLY,.1uF,50V,10% *NOTE*	4	C201, C202, C203, C204
.....5	417-0200	CONN,HEADER 20 PIN	0.5	J202
.....5	417-1093	RECP,DB-9,FILTERED,RT ANGLE PCB MT	1	J201
.....5	519-0510-001	PCB,MACH,MBD DC CONN,FM-10S,BKAWAY	1	
.....6	519-0510	PCB,MACH,MOTHERBOARD SHIELD, BREAKAWAY PCB, FM10S	0.015	
.....4	919-0516-002	ASSY,PCB,TEMP SENSOR,HEATSINK	1	
.....5	003-1054	CAP,CER,MNLY,.1uF,50V,20%	4	C1, C4, C6, C7
.....5	040-4713	CAP,MICA,47PF,500V,5%	2	C3, C5
.....5	042-3922	CAP,MICA,390PF,100V,5%	2	C2, C8
.....5	100-1041	RES,1K OHM,1/4W,1%	2	R3, R5
.....5	100-1051	RES,10K OHM,1/4W,1%	1	R6
.....5	103-1021	RES,10 OHM,1/4W,1%,METAL	1	R1
.....5	103-4024	RES,4.02K OHM,1/4W,1%,METAL	1	R4
.....5	200-4733	DIODE,ZENER,1N4733A, 5%	1	D1
.....5	220-0035	IC,LM35DZ CELSIUS TEMP SENSOR	1	U2
.....5	220-0072	IC,OP-AMP,TLC072,BIMOS,SINGLE SUPPLY	1	U1
.....5	418-0255	CONN,MALE,4PIN	1	J1
.....5	519-0516-001	PCB,MACH,EXH AIR TEMP SENSOR	1	
.....6	519-0516	PCB,MACH,EXH AIR TEMP SENSOR BKAWAY	0.031	
.....4	949-0504	WIRE HARNESS ASSY, MOTHERBOARD (SBCM)	1	

BOM LEVEL	PART NO.	DESCRIPTION	QTY	REF. DES.
.....5	402-0051	TY-RAP, W/FLAG	4	
.....5	417-0053	SKT,CONN 641294-1 AMP	6	
.....5	418-0034	PLUG,BNC DUAL CRIMP 1-227079-6	2	
.....5	418-0240	PLUG,FEM,4PIN	2	
.....5	611-1250	TUB,HT SHK,1/8	0.166	
.....5	621-1359	CBL,COAX,RG316/U,50 OHM	1.75	
.....5	622-8451	WIRE,BELD 8451,SHIELD,1PR	1	
....2	959-0506	ASSY,REJ LOAD,2WAY COMBINER,FM10S	1	
.....3	139-0200	RES,200 OHM,150W,10%,NON-IND,CER (Note)	4	
.....3	417-0321	CONN,N FEM BULKHD RECPT REAR MT PRE	1	
.....3	420-0521	SCREW,10-32X1-1/2,NYLON,RND HD	2	
.....3	420-8121	SCREW,8-32X.375,BR PH	14	
.....3	421-0102	10-32 KEP NUT	2	
.....3	421-4008	4-40 KEP NUT	2	
.....3	421-6002	6-32 BRSS HEX NUT	2	
.....3	421-6908	SHEET EDGE CONNECTOR 6-32	28	
.....3	422-6107	SCREW,SEMS 6-32 X 7/16 PAN PH.ST."	14	
.....3	423-6004	#6 LOCK SPLIT (BRONZE)	2	
.....3	423-8006	#8 LOCK INT TOOTH	8	
.....3	441-9404	STOFF,PAN-POLE	2	
.....3	471-5267	CHASSIS,REJECT LOAD,SUMO	1	
.....3	471-5268	END PANEL,REJECT LOAD,SUMO	2	
.....3	471-5269	ANGLE,REJECT LOAD,SUMO	2	
.....3	471-5271	STRAP,INPUT,REJECT LOAD,SUMO	1	
....2	959-0507-002	ASSY, PWR SUPPLY BAY, 1 PH, 3W, 220V, FM10S	1	
.....3	140-0021	VARISTOR BLOCK, 275VRMS, 350VDC	6	MOV1, MOV1A, MOV3, MOV3A, MOV4, MOV4A
.....3	330-1000	FUSE,MDA 10A 250V SLO-BLO	2	
.....3	341-0075	CONTACTOR,125A,220/240VAC,50/60HZ	1	K1
.....3	341-0107	CKT BRKR 125A,ABB T3N125TW	1	
.....3	402-0008	MTG DEVICE,FOR #6SCR,TIE CBL	5	
.....3	402-0015	TIE,CBL,PANDUIT, 7 3/8 LONG"	10	
.....3	402-0839	CLAMP,CBL,5/8	3	
.....3	410-0030	LUG,1/4-MTG,1/0-6,SOLDERLESS	1	
.....3	412-0050	TERM BLOCK,GOULD 63133	1.333	TB2
.....3	412-0090	BARR STP,9 POS 7/16	1	TB1
.....3	415-0003	BLOCK,FUSE,2-POLE FUSEHOLDER	1	
.....3	420-0091	BOLT, 3/8-16 X 2 1/4 FULL THREAD	6	
.....3	420-0108	SCREW,10-32X.500,S.S. PHH	12	
.....3	420-0114	SCREW,10-32X.875,S.S.	2	
.....3	420-0817	ASSY,FEMALE SCREWLOCK 205817-1	8	
.....3	420-4106	SCREW,4-40X.375,S.S. PH	36	
.....3	420-4992	SCREW,4-40X.750,NY SL PAN HD SC	5	
.....3	420-6002	SCREW,6-32X.437,S.S. PH FH UC	6	
.....3	420-6108	SCREW,6-32X.500,S.S. PH	3	
.....3	420-8002	SCREW,8-32X3.000,S.S. PHH	2	
.....3	420-8106	SCREW,8-32X.375,S.S. PHH	8	
.....3	421-0102	10-32 KEP NUT	12	

BOM LEVEL	PART NO.	DESCRIPTION	QTY	REF. DES.
.....3	421-0801	#10-32 BR HEX NUT	9	
.....3	421-1003	1/4-20 HEX NUT	3	
.....3	421-1113	RIV,CLOSED-END .125 X .316L	5	
.....3	421-4008	4-40 KEP NUT	12	
.....3	421-4901	#4 NYLON HEX NUT	5	
.....3	421-5000	3/8-16 .325 THICK STANDARD	12	
.....3	421-6008	6-32 KEP NUT	6	
.....3	421-6908	SHEET EDGE CONNECTOR 6-32	15	
.....3	421-8003	8-32 KEP NUT	3	
.....3	422-6106	SCREW,SEMS 6-32 X 3/8 PAN PH. ST."	26	
.....3	422-6107	SCREW,SEMS 6-32 X 7/16 PAN PH.ST."	16	
.....3	423-0001	WASHER,FLAT,#10 SST,.438 X .203 X .065	2	
.....3	423-0002	#10 LOCK SPLIT	4	
.....3	423-0007	#10 LOCK INT TOOTH	9	
.....3	423-1003	1/4-20 LOCK SPLIT	3	
.....3	423-4002	#4 LOCK S.S. SPLIT	36	
.....3	423-5000	WASH,FLAT,.385 ID,.75 OD,.125 THK BRASS	12	
.....3	423-5004	3/8 LOCK SPLIT (BRONZE)	12	
.....3	423-6002	#6 LOCK SPLIT	3	
.....3	423-8000	#10 FLAT .560 X .190 X .045	8	
.....3	423-8002	#8 LOCK SPLIT	8	
.....3	423-8007	#8 FLAT .375 X .175 X .030	3	
.....3	441-0201	BUSHING,DC FILTER,FM10S	6	
.....3	441-9404	STOFF,PAN-POLE	2	
.....3	470-0353	AC HIGH/LOW LINE MONITOR WITH INDICATOR	1	
.....3	471-5231-100	HOOD,PS,FM10S WITH ABB Tmax	1	
.....3	471-5232	COVER,PS,SUMO	1	
.....3	471-5241	STRAP,MOV GND,SUMO	1	
.....3	471-5255	BUSBAR,PS,SUMO	2	
.....3	471-5256-100	COVER,CIR BRKR,FM10S WITH ABB Tmax	1	
.....3	471-5261-009	SUPPORT,PS,SUMO,UNSCREENED	1	
.....3	471-5262	AIR DAM,SMALL,SUMO	1	
.....3	471-5263	AIR DAM,MEDIUM,SUMO	1	
.....3	471-5264	AIR DAM,LARGE,SUMO	1	
.....3	471-5265	JOINER,MOV,SUMO	2	
.....3	471-5276	STRAP, MOV PAIR	1	
.....3	471-5277	GUARD,HIGH CURRENT,PS,FM10S	1	
.....3	471-5383	GUARD, AC ENTRY, FM10S	1	
.....3	471-5421	CHANNEL,TOROID MOUNTING,FM10S/FM20S	4	
.....3	486-2285	HANDLE,OVAL,BLK,10-32 X 4	2	
.....3	486-5500-500	SHAFT FOR ABB T3 BREAKERS,FM10S	1	
.....3	540-0015-012	PWR SPLY,80 WATT,UNIV INPUT,3 OUTS	1	PS7
.....3	594-0099	LABEL,WARNING HIGH CURRENT",1" X 1.5",VINYL,ADHESIVE BACKED"	1	
.....3	594-0501	LABEL,CE ELECTRICAL SYMBOLS	0.5	
.....3	594-0502	LABEL SHEET, FM10S/20S POWER SUPPLY BAY	1	
.....3	594-0503	LABEL, DANGER-HAZARDOUS VOLTAGE	1	
.....3	919-0096-001	ASSY PCB,OPTICALLY COUPLED REL NOTE	1	K2

BOM LEVEL	PART NO.	DESCRIPTION	QTY	REF. DES.
.....4	000-1051	CAP,CER,DISC,.03UF,300VAC,20%	-1	REMOVE C3YOU MUST SCRAP THIS PART ON SCRAP REPORT AFTER REMOVAL!
.....4	110-5633	RES,560 OHM,1/2W,5%	-1	REMOVE R2YOU MUST SCRAP THIS PART ON SCRAP REPORT AFTER REMOVAL!
.....4	919-0096	ASSY PCB,OPTICALLY COUPLED REL (SBCM)	1	
.....5	000-1051	CAP,CER,DISC,.03UF,300VAC,20%	1	C3
.....5	002-1034	CAP,CER,DISC,.001UF,1000V	2	C1, C4
.....5	020-4773	CAP,LYTIC,47UF,35V,STDUP	1	C2
.....5	103-5112	RES,51.1 OHM,1/4W,1%,METAL	1	R4
.....5	110-5633	RES,560 OHM,1/2W,5%	1	R2
.....5	110-8233	RES,820 OHM,1/2W,5%	1	R3
.....5	130-2032	RES,2K OHM,10W,3%,WW	2	R1, R5
.....5	140-0023	VARISTOR,27V,V27ZA60	1	MOV1
.....5	200-5359	DIODE,ZENER,1N5359 24V 5W	1	D2
.....5	203-4005	DIODE,1N4005	2	D1, D4
.....5	229-0033	IC,OPTOIS,4N33	1	U1
.....5	239-0003	BRDG RECT,6PH20 EDI	1	D5
.....5	270-0054	REL,PC 24V T90NID1224 P&B	1	K1
.....5	270-0054-001	COVER,DUST REL 35C620 P&B	1	
.....5	330-0055	FUSE,3A,250V,PCB MOUNT	2	F1, F2
.....5	410-0025	TERM,MALE DISCONNECT PC .25TAB	5	E1, E2, E3, E4, E5
.....5	417-0600	SKT,IC 6 PIN	1	XU1
.....5	420-2504	SCREW,2-56X.250,S.S. PH FH SC	4	
.....5	420-4104	SCREW,4-40X.250,S.S. PH	2	
.....5	421-2001	2-56 S.S. NUT	4	
.....5	423-2002	#2 LOCK SPLIT	4	
.....5	423-4002	#4 LOCK S.S. SPLIT	2	
.....5	474-0347	PLATE,SOLID STATE RELAY MOUNT	1	
.....5	519-0096	PCB,MACH,OPTICALLY COUPLED RELAY	1	
.....5	601-2209	WIRE,AWG22,7/30 WHT	0.75	
.....3	919-0511	ASSY,PCB,P.S. DIST.,FM-10S	1	
.....4	003-1054	CAP,CER,MNLY,.1uF,50V,20%	1	C1
.....4	100-1041	RES,1K OHM,1/4W,1%	1	R10
.....4	103-1021	RES,10 OHM,1/4W,1%,METAL	5	R1, R2, R3, R4, R5
.....4	103-1785	RES,17.8K OHM,1/4W,1%,(N)	1	R9
.....4	103-1825	RES,18.2K OHM,1/4W,1%,METAL	1	R8
.....4	132-2523	RES,25 OHM,5W,5%,WW	2	R11, R12
.....4	417-0700	CONN,PCB MT,2PIN	3	J7, J8, J9
.....4	417-0903	RCPT, 9 PIN D, FEMALE	2	J12, J13
.....4	417-1276	CONN,PCB,12 PIN	1	J11
.....4	417-2502	RCPT,25 PIN D, FEMALE	6	J1, J2, J3, J4, J5, J10
.....4	418-0255	CONN,MALE,4PIN	1	J6
.....4	420-0817	ASSY,FEMALE SCREWLOCK 205817-1	5	
.....4	519-0511	PCB,MACH,P.S. DIST.,FM-10S	1	

BOM LEVEL	PART NO.	DESCRIPTION	QTY	REF. DES.
.....3	919-0516-001	ASSY,PCB,TEMP SENSOR,AIR FLOW	1	
.....4	003-1054	CAP,CER,MNLY,.1uF,50V,20%	4	C1, C4, C6, C7
.....4	040-4713	CAP,MICA,47PF,500V,5%	2	C3, C5
.....4	042-3922	CAP,MICA,390PF,100V,5%	2	C2, C8
.....4	100-1041	RES,1K OHM,1/4W,1%	2	R5, R3
.....4	100-1051	RES,10K OHM,1/4W,1%	1	R6
.....4	103-1021	RES,10 OHM,1/4W,1%,METAL	1	R1
.....4	103-4024	RES,4.02K OHM,1/4W,1%,METAL	1	R4
.....4	200-4733	DIODE,ZENER,1N4733A, 5%	1	D1
.....4	220-0035	IC,LM35DZ CELSIUS TEMP SENSOR	1	U2
.....4	220-0072	IC,OP-AMP,TLC072,BIMOS,SINGLE SUPPLY	1	U1
.....4	418-0255	CONN,MALE,4PIN	1	J1
.....4	519-0516-001	PCB,MACH,EXH AIR TEMP SENSOR	1	
.....5	519-0516	PCB,MACH,EXH AIR TEMP SENSOR BKAWAY	0.031	
.....3	919-0519-001	PCB,ASSY,DC FILTER (SBCM)	12	
.....4	009-1032	CAP,CER CHIP,1000PF,100V,5%	3	C1, C2, C3
.....4	426-4003	NUT,PEM 4-40 KFS2-440	3	
.....4	519-0519-001	PCB,MACH,DC FILTER	1	
.....5	519-0519	PCB,MACH,DC FILTER BREAKAWAY	0.083	
.....3	949-0227	WIRE HARNESS,POWER SUPPLY BAY,1PH,FM10S (SBCM)	1	
.....4	410-0074	SPLICE,PARALLEL #2 AMP 52748	2	
.....4	410-0076	PARALLEL SPLICE, AWG 2/0	2	
.....4	410-4106	LUG,TERM, #10 RING UNINS #6 WIRE	2	
.....4	512-020	TERMINAL,NICHIFU TMDN #125-250-03FA TERMINAL	2	
.....4	601-1800-006	WIRE,AWG 18,STRANDED,LIGHT BLUE	1.66	
.....4	610-0201	CBL,AWG2,ST OIL RESIST BLACK UL	3.13	
.....4	610-0402	CBL,AWG 4 ST RED 600V	1.75	
.....3	949-0507-002	ASSY, POWER SUPPLY HARNESS, FM-10S (SBCM)	1	
.....4	364-3102-402	SHIELD BEAD	6	
.....4	402-0000	TY-RAP	15	
.....4	402-0015	TIE,CBL,PANDUIT, 7 3/8 LONG"	10	
.....4	402-0051	TY-RAP, W/FLAG	8	
.....4	410-0011	LUG,FEM-SPADE 16/14	2	
.....4	410-0050	LUG,TERM,10-12GA,FEMSPADE	1	
.....4	410-0051	LUG,TERM,14-16GA,FEMSPADE	4	
.....4	410-0065	LUG,TERM #6 RING CRIMP #22 AWG	2	
.....4	410-0067	LUG,FEM DISCONNECT 22-18 .230W	8	
.....4	410-1016	TERM LUG,SOLDER TYPE#6 1/4HOLE	1	
.....4	410-1421	LUG,QUICK DISCONNECT #18-22	5	
.....4	410-1553	LUG,TERM #10 RING CRIMP 16-22	2	
.....4	410-2478	CRIMP TERMINAL,AMP 640707-1	15	
.....4	417-0053	SKT,CONN 641294-1 AMP	24	
.....4	417-1300	HSNG,13-PIN,AMP 1-640250-3	1	
.....4	417-1305	HOUSING,5-PIN,AMP 640250-5	1	
.....4	417-6880-001	CONTACT,DUAL BEAM,10-12 AGW	15	
.....4	418-0240	PLUG,FEM,4PIN	2	
.....4	418-0670	HOUSING,CONN,6PIN FEM	1	
.....4	418-0701	CONN,HOUSING,2 PIN	2	

BOM LEVEL	PART NO.	DESCRIPTION	QTY	REF. DES.
.....4	418-1271	CONN,HOUSING,12PIN	1	
.....4	418-6879-003	CONNECTOR,3 PIN,AMPINNERGY	5	
.....4	512-020	TERMINAL,NICHIFU TMDN #125-250-03FA TERMINAL	11	
.....4	601-0600	WIRE,AWG6,HYPALON,BELDEN 34406	0.34	
.....4	601-0600-054	CBL,AWG 6, STRANDED, GREEN/YELLOW	1.15	
.....4	601-1202	WIRE,AWG12 19/25 RED	21.83	
.....4	601-1202-006	WIRE,AWG 12,STRANDED,LIGHT BLUE	22.16	
.....4	601-1202-054	WIRE,AWG 12,STRANDED, GREEN/YELLOW	23.41	
.....4	601-1604	WIRE,AWG16, 19/29 YEL	15.7	
.....4	601-1604-006	WIRE,AWG 16,STRANDED,LIGHT BLUE	1	
.....4	601-1800	WIRE,AWG18 19/30 BLK	35	
.....4	601-1800-006	WIRE,AWG 18,STRANDED,LIGHT BLUE	2.29	
.....4	601-1800-054	WIRE,AWG 18,STRANDED,GREEN/YELLOW	18	
.....4	601-2209	WIRE,AWG22,7/30 WHT	21.58	
.....4	602-2202	WIRE,TW,AWG22,PVC INS,BLK/RED	3.5	
.....4	610-0019-363	CBL, 16-3, STRANDED, SHEILDED, BLK PVC	9.83	
.....4	611-3750	TUB,HT SHK,3/8	0.083	
.....4	611-5000	TUB,HT SHK 1/2	0.333	
.....4	693-0002	SLVG,1/4 EXPANDO FR BLACK"	28.27	
..1	909-9250-E	FXi-250,EXCITER,250W,WITH EXG INSTALLED	1	
....2	909-9250-EC	FXi-250,EXCITER,250W,WITH EXG INSTALLED,NO MAN/INST KITS	1	
.....3	422-6107	SCREW,SEMS 6-32 X 7/16 PAN PH.ST."	30	
.....3	471-5334	COVER,TOP,DTC EXCITER	1	
.....3	594-0505	LABEL, WARNING-ONLY AUTHORIZED PERSONNEL	1	
.....3	909-9250-ET	FXi-250,EXCITER,250W,WITH EXG INSTALLED,BASIC TEST	1	
.....4	380-5502	FILTER,FAN	1	
.....4	380-8250	FAN,DC GALAXY,24V,15W,150CFM	1	
.....4	400-0600	STRIP,QUIET SHIELD,6.00x.197	4	
.....4	400-6700	GROMMET STRIP,.062-.090	0.125	
.....4	402-0000	TY-RAP	8	
.....4	402-0001	TY-RAP,T TY24M,1-1/4 DIA	2	
.....4	402-0006	MT,ADH BACKED,FOR CBL TIES	2	
.....4	402-0008	MTG DEVICE,FOR #6SCR,TIE CBL	2	
.....4	410-0100-100	DISPLAY,COLOR LCD,FLAT PANEL,DTC DIGITAL EXCITER	1	
.....4	417-3713	CONN,37-PIN/SOCKET ADAPTOR,1000PF C,FILTERED	1	
.....4	417-5145-811	MODULE, IEC, AC SW/CB, FILT, 15A, 110/220	1	
.....4	420-0508	SCREW,10-32X.500,S.S. FLH	1	
.....4	420-0817	ASSY,FEMALE SCREWLOCK 205817-1	5	
.....4	420-4103	SCREW,4-40X.187,S.S. PH	4	
.....4	420-4105	SCREW,4-40X.312,S.S. PH	12	
.....4	420-4204	SCREW,4-40X.250,PH FLH UC	8	
.....4	420-6002	SCREW,6-32X.437,S.S. PH FH UC	27	
.....4	420-6138	SCREW,6-32X.625,S.S. PH FH	4	
.....4	421-0102	10-32 KEP NUT	1	

BOM LEVEL	PART NO.	DESCRIPTION	QTY	REF. DES.
.....4	421-1003	1/4-20 HEX NUT	1	
.....4	421-1113	RIV,CLOSED-END .125 X .316L	2	
.....4	421-4008	4-40 KEP NUT	4	
.....4	421-6008	6-32 KEP NUT	4	
.....4	421-6908	SHEET EDGE CONNECTOR 6-32	30	
.....4	421-8028	NUT,JAM,1/2-28 UNEF-2B	8	
.....4	422-6106	SCREW,SEMS 6-32 X 3/8 PAN PH. ST."	13	
.....4	422-6107	SCREW,SEMS 6-32 X 7/16 PAN PH.ST."	55	
.....4	423-1003	1/4-20 LOCK SPLIT	1	
.....4	423-4002	#4 LOCK S.S. SPLIT	14	
.....4	423-9002	WASH,INT TOOTH,1/2	8	
.....4	469-0366	FINGER STOCK (NOTE!!!!!)	14	
.....4	469-0366-2	STRIP,RFI SHIELD 4.25	1	
.....5	469-0366	FINGER STOCK (NOTE!!!!!)	4.25	
.....4	471-5326-100	PANEL,FRONT,FXi EXCITER WITH NEW DISPLAY	1	
.....4	471-5327	CHASSIS,DTC EXCITER	1	
.....4	471-5328	PARTITION,FAN,DTC EXCITER	1	
.....4	471-5329	SHIELD,POWER SUPPLY,DTC EXCITER	1	
.....4	471-5330-100	PANEL,REAR,DTC EXCITER	1	
.....4	471-5333	ANGLE,FRONT PANEL MOUNT,DTC EXCITER	1	
.....4	471-5365	FILLER,DAUGHTER CARD,EXGINE,FXi60/250	1	
.....4	500-033	Screw, 6 x 1/4 phillips head SM SS type A"	1	
.....4	500-210	Screw,SEMS 4-40x1/4 Phil Pan Head MS Blk Zinc(external lock)	4	
.....4	500-211	Screw,SEMS 4-40x3/8 Ph Pan Head MS Black Zinc (External)	4	
.....4	591-0034	NAMEPLATE,FXi250,DTC EXCITER	1	
.....4	591-0036	LABEL,POWER,DTC EXCITER	1	
.....4	591-0037	LABEL,FAULT,DTC EXCITER	1	
.....4	594-0073	LABEL,WARNING ROTATING FANS	2	
.....4	594-0503	LABEL, DANGER-HAZARDOUS VOLTAGE	1	
.....4	700-0148	TAPE,JOINING 3/4	0.001	
.....4	919-0142	PCB,ASSY,ATTENUATOR,VAR,LO PWR,PNL MTG	1	
.....5	102-0000	RES,CHIP,0 OHM,0805,SMD	1	R4
.....5	102-3320	RES,CHIP,332 OHMS,1/10W,1%,SMD	2	R2, R3
.....5	177-1044	RES,TRMR,1K,25TURN,TOP ADJ	1	R1
.....5	417-0259	CONN, BNC PCB MOUNT	2	J1, J2
.....5	519-0142	PCB,MACH,ATTENUATOR,VAR,LO PWR,PNL MTG	1	
.....4	919-0541-001	PCB, ASSY, CONTROLLER (SBCM)	1	
.....5	007-1022	CAP,CER,100pF,50V,2%,SMD	11	C68, C69, C70, C71, C72, C73, C74, C75, C101, C102, C103
.....5	007-1024	CAP,CER,.001uF,50V,10%,SMD	5	C5, C6, C7, C8, C22

BOM LEVEL	PART NO.	DESCRIPTION	QTY	REF. DES.
.....5	007-1044	CAP,CER,0.1uF,50V,10%,SMD note	69	C1, C2, C3, C4, C9, C10, C11, C12, C13, C14, C15, C16, C17, C18, C19, C20, C21, C23, C24, C25, C26, C27, C28, C29, C30, C31, C32, C33, C34, C35, C36, C42, C43, C44, C47, C48, C49, C50, C51, C52, C54, C55, C56, C57, C59, C60, C61, C63, C64, C76, C77, C78, C79, C80, C81, C82, C83, C88, C89, C91, C92, C93, C94, C95, C96
.....5	007-1054	CAP,CER,1uF,50V,10%,SMD	10	C37, C38, C39, C40, C41, C45, C53, C58, C62, C90
.....5	007-3923	CAP,CER,390pF,100V,5%,SMD	1	C46
.....5	070-1064	CAP,TANT,10uF,35V,20%,SMD	7	C65, C66, C67, C84, C85, C86, C87
.....5	070-1065	CAP,TANT,10UF,20V,10%,SMD	8	C104, C105, C106, C107, C108, C109, C110, C111
.....5	102-0000	RES,CHIP,0 OHM,0805,SMD	8	R23, R24, R27, R28, R39, R41, R43, R101
.....5	102-0100	RES,CHIP,10.0 OHMS,1/10W,1%,SMD	5	R36, R47, R48, R49, R50
.....5	102-1000	RES,CHIP,100 OHMS,1/10W,1%,SMD	1	R37
.....5	102-1001	RES,CHIP,1.00K OHMS,1/10W,1%,SMD	1	R57
.....5	102-1002	RES,CHIP,10.0K OHMS,1/10W,1%,SMD	18	R1, R2, R3, R31, R32, R35, R42, R46, R51, R60, R63, R66, R69, R80, R81, R84, R88, R92
.....5	102-1501	RES,1.50K OHM,1/10W,1%	1	R22
.....5	102-2001	RES,CHIP,2.00K OHMS,1/10W,1%,SMD	11	R59, R62, R65, R68, R71, R73, R75, R77, R79, R86, R89
.....5	102-2002	RES,CHIP,20.0K OHMS,1/10W,1%,SMD	2	R45, R53
.....5	102-2201	RES,CHIP,22.1 OHM,1/10W,1%	10	R4, R5, R6, R7, R8, R9, R10, R11, R15, R17
.....5	102-2210	RES,CHIP,221 OHMS,1/10W,1%,SMD	2	R54, R58
.....5	102-2431	RES,CHIP,2.43K OHMS,1/10W,1%,SMD	1	R33
.....5	102-2743	RES,CHIP,274 OHM,1/10W,1%,SMD	2	R13, R14
.....5	102-3302	RES,CHIP,33.2 OHMS,1/10W,1%,SMD	2	R25, R26
.....5	102-3304	RES,CHIP,3.3M,1/10W,10%,SMD	11	R61, R64, R67, R70, R72, R74, R76, R78, R85, R87, R90
.....5	102-3832	RES, CHIP, 38.3 KOHMS, 1/10W, 1%, SMD	3	R82, R83, R91
.....5	102-4421	RES,CHIP,4.42K OHMS,1/10W,1%,SMD	1	R29

BOM LEVEL	PART NO.	DESCRIPTION	QTY	REF. DES.
.....5	102-5041	RES,4.99K OHM,1/10W,1%	1	R30
.....5	102-5143	RES,5.1K OHMS,1/10W,1%,SMD	4	R12, R16, R52, R100
.....5	102-9311	RES,9.31K OHMS,1/10W,1%,SMD	1	R34
.....5	198-1054	TRMR,10K OHMS,TOP ADJ,SMD (N)	2	R40, R44
.....5	204-0914	DIODE,SWITCHING,MMBD914LT1,SMD	2	D1, D2
.....5	210-3906-001	TSTR,3906,SMD	2	Q1, Q4
.....5	216-0074	IC,TL074CD,QUAD OP AMP,SMD	3	U27, U28, U29
.....5	216-0301	MOSFET,NCH,25V,LO VTH,SOT23	1	Q3
.....5	216-7002	IC,MOSFET,2N7002LT1,SMD	2	Q2, Q5
.....5	224-0011	IC, USB TRANSCEIVER, LV, SMD	1	U15
.....5	224-0116	IC, 16 MEG SDRAM, SMD	2	U13, U14
.....5	224-0160	IC, PAGE FLASH, 16 MEG, SMD (NOTE D.N.S.)	1	U12
.....5	224-0708	IC, MICRO SUPERVISOR, 3V, SMD	1	U4
.....5	224-0905	IC, CLOCK BUFFER,LV, SMD	1	U5
.....5	224-2210	IC, PAL, 22LV10, LOW V, SMD	3	U17, U18, U20
.....5	224-2410	IC,RS-232 MULTI-TRANSCEIVER,,SMD	1	U16
.....5	224-3806	IC, LCD DISPLAY CONTROL, SMD	1	U37
.....5	224-5272	IC, MICROPROCESSOR, MCF5272	1	U1
.....5	224-6245	IC, 16 BIT TRANSCEIVER, SMD	4	U7, U8, U9, U21
.....5	224-6373	IC, 16 BIT LATCH, LV, SMD	4	U30, U31, U32, U40
.....5	224-7225	IC,QUAD D/A,8 BIT,TLC7225	1	U26
.....5	224-7548	IC, D/A CONVERTER, 12 BIT, PLCC	1	U22
.....5	224-7733	IC, POWER SUPERVISOR, 3.3V	1	U3
.....5	226-4740	RES NET,4.7K,10-PIN,.1 SPACE	7	R18, R19, R20, R21, R38, R55, R56
.....5	227-1585	VR,LT1585CT-3.3,3.3V,TO-220	1	U38
.....5	229-0033	IC,OPTOIS,4N33	5	U24A, U35A, U35B, U36A, U36B
.....5	229-0111	IC,AC INPUT OPTO-ISOLATOR	6	U19A, U19B, U33A, U33B, U34A, U34B
.....5	229-0158	IC,A/D AND MUX,SMD	2	U23, U25
.....5	229-9366-001	IC,CMOS SERIAL EEPROM,4K,93C66	1	U6
.....5	231-0136	IC,VOLT REF,2.5V,8-PIN SOIC	1	D3
.....5	231-7905	VR,LM79L05AC,NEG VOLT,100mA,SMD	1	U39
.....5	270-1254	REL,12V 2PDT	1	K1
.....5	325-0250	LED,DUAL RED/GREEN,LOW PROFILE,SMD	2	DS1, DS2
.....5	340-0004	SW,JUMPER PROGRAMMABLE	7	P8, P14, P15, P16, P17, P20, P24
.....5	342-3304	SW,TACT,SPST,N.O.,SMD,RECESSED	2	S1, S2
.....5	390-4800	OSCILLATOR, 48.00 MHZ	1	U11
.....5	390-6600	OSCILLATOR, 66.00 MHZ	1	U10
.....5	408-6000	CONNECTOR, HEADER, 60 PIN, SMD	1	J5
.....5	413-0106	TERM,TEST POINT,OVAL,RED	2	TP1, TP2
.....5	417-0189	CONN,9PIN MALE,RTANG,PCB MT	1	J10
.....5	417-0200	CONN,HEADER 20 PIN	1.5	J8, J9, J11, J13, J14, J15, J16, J17, J20, J24
.....5	417-0315	CONN,USB TYPE B" RECEPTACLE, PCB MOUNT"	1	J12
.....5	417-0677	CONN,PCB MT,6PIN MALE	1	J7
.....5	417-1128	CONNECTOR HEADER, 28 PIN, 2MM	1	J22

BOM LEVEL	PART NO.	DESCRIPTION	QTY	REF. DES.
.....5	417-1132	CONNECTOR HEADER, 32 PIN,2MM	1	J21
.....5	417-1606	CONN,HEADER,16-PIN,PCB MOUNT	1	J6
.....5	417-8925	CONN, 25 PIN,D, FEMALE, R.A. FILTERED	1	J3
.....5	418-0255	CONN,MALE,4PIN	1	J25
.....5	418-2602	CONN,PCB MALE HEADER,26 POS	1	J1
.....5	418-2602-001	CONN,HEADER,26 PIN,LATCH/EJECT,PCB	1	J23
.....5	420-4106	SCREW,4-40X.375,S.S. PH	2	
.....5	421-4008	4-40 KEP NUT	2	
.....5	431-1400	SOCKET,14-PIN,DIP,SMD	6	U19A, U19B, U24A, U33A, U33B, U34A, U34B, U35A, U35B, U36A, U36B
.....5	431-1600	SOCKET,16-PIN,DIP,SMD note	1	XK1
.....5	519-0541-001	PCB, MACH, CONTROLLER	1	
.....4	919-0542	PCB, ASSY, DSP, DTC DIGITAL EXCITER (SBCM)	1	
.....5	006-1075	CAP,LYTIC,10uF,50V,20%,SMD note	13	C604, C605, C606, C607, C608, C609, C611, C613, C614, C615, C616, C686, C693
.....5	006-1075-350	CAP,LYTIC,10uF,35V,20%,NP,SMD	1	C681
.....5	006-1085	CAP,ELECTRO,100 UF,10%,35V,SMD	4	C641, C648, C655, C662
.....5	006-4775-350	CAP,ELECTRO,47UF,20%,35V,SMD	3	C610, C612, C685
.....5	007-0010	CHIP CERAMIC 10pF 50V 5% 0603 SMD	4	C255, C256, C257, C258
.....5	007-0330	CAP,CER,.33UF,,-20%,16V,0603,SMD	4	C26, C45, C56, C206
.....5	007-0560	Chip Ceremac, 560pF 50v 5% 1206 SMD	1	C243
.....5	007-0683	CAP CERAMIC, 0.068uF, 50v, SMD, 0805	1	C506
.....5	007-1012	CAP,CER,10pF,50V,2%,SMD	3	C617, C671, C672
.....5	007-1013-050	CAP,CER,100 PFD,5%,50V,0603,SMD	2	C269, C270
.....5	007-1024	CAP,CER,.001uF,50V,10%,SMD	5	C522, C675, C676, C677, C678
.....5	007-1034	CAP,CER,0.01uF,50V,10%,SMD	27	C3, C502, C503, C504, C505, C525, C526, C531, C532, C541, C542, C556, C557, C558, C592, C593, C619, C629, C630, C620, C665, C667, C669, C687, C688, C689, C690

BOM LEVEL	PART NO.	DESCRIPTION	QTY	REF. DES.
.....5	007-1040-025	CAP,CER,.1UF,,-20%,25V,0603,SMD	131	C1, C2, C15, C16, C17, C24, C25, C30, C31, C35, C36, C37, C38, C39, C40, C48, C49, C50, C51, C52, C53, C54, C55, C57, C58, C59, C61, C62, C63, C66, C74, C75, C76, C78, C80, C81, C82, C83, C84, C85, C86, C87, C88, C89, C90, C91, C92, C93, C94, C95, C96, C97, C98, C99, C100, C101, C102, C104, C105, C106, C107, C108,
.....5	007-1044	CAP,CER,0.1uF,50V,10%,SMD note	56	C18, C501, C507, C509, C511, C513, C515, C519, C520, C537, C539, C543, C544, C545, C546, C547, C548, C549, C551, C552, C553, C554, C555, C559, C560, C561, C562, C563, C564, C568, C569, C570, C577, C579, C580, C583, C584, C587, C589, C595, C598, C599, C600, C601, C602, C603, C622, C624, C626, C635, C642,
.....5	007-1054	CAP,CER,1uF,50V,10%,SMD	8	C638, C640, C645, C647, C652, C654, C659, C661
.....5	007-1054-002	CAP,CER,1000PF,,-20%,50V,0603,SMD	4	C125, C236, C238, C272
.....5	007-1201-050	CAP,CER,12 PFD,5%,50V,1206,SMD	3	C291, C292, C523
.....5	007-1512	CAP,CER,15pF,50V,2%,SMD	1	C571
.....5	007-1800-006	CAP,1800pF,50V,10%,SMD,0603	1	C597
.....5	007-2202-051	CAP,CER,22PF,5%,50V,0603,SMD	2	C218, C220
.....5	007-2705	CAP,CER,.027UF,10%,50V,1206,SMD	2	C239, C240
.....5	007-3300	CAP,CER,3.3PF,50V,.25pF,SMD	2	C528, C529
.....5	007-3913-050	CAP,CER,39 PF,5%,50V,1206,SMD	4	C130, C131, C132, C133
.....5	007-3923	CAP,CER,390pF,100V,5%,SMD	8	C517, C518, C637, C644, C651, C658, C673, C674
.....5	007-4700-501	CAP,CER,4.7NF,10%,50V,0603,SMD	5	C208, C209, C210, C211, C254
.....5	007-4724	CAP,CER,0.047uF,50V,10%,SMD	1	C253

BOM LEVEL	PART NO.	DESCRIPTION	QTY	REF. DES.
.....5	007-6800-501	CAP,CER,6.8nF,10%,50V,0603,SMD	1	C250
.....5	007-6812-001	CAP,CER,68PF,5%,50V,0603,SMD	2	C214, C215
.....5	009-0200	CAP,TANTALUM CHIP,10UF,POLAR,10%,25V,SMD	7	C7, C8, C11, C12, C13, C14, C249
.....5	009-0201	CAP,TANTALUM CHIP,10UF,POLAR,10%,10V	18	C19, C20, C21, C22, C23, C27, C33, C34, C41, C42, C44, C46, C207, C212, C213, C260, C261, C682
.....5	009-0202	CAP,TANALUM CHIP,100UF,POLAR,10%,6V,SMD	1	C67
.....5	009-0204	CAP,TANTALUM CHIP,47UF,POLAR,10%,6V,SMD	2	C231, C232
.....5	009-0206	CAP,TANTALUM CHIP,15UF,POLAR,10%,10V,SMD	1	C60
.....5	020-1085	CAP,LYTIC,100UF,50V,STDUP,NP	6	C508, C510, C514, C516, C679, C680
.....5	020-3385	CAP,LYTIC,330UF,25V,NP	3	C521, C540, C578
.....5	070-0220	Cap,Tantalum Chip 220uF 10V 10% 7343H SMD	2	C68, C332
.....5	070-1054	CAP,TANT,1uF,35V,10%,SMD	14	C538, C576, C581, C582, C585, C586, C588, C590, C618, C621, C623, C625, C627, C670
.....5	070-1064	CAP,TANT,10uF,35V,20%,SMD	22	C524, C527, C530, C533, C535, C536, C565, C566, C567, C572, C573, C591, C594, C628, C631, C632, C633, C634, C663, C664, C691, C692
.....5	070-1084-L16	CAP,TANT,100 MFD,20%,16V,E CASE,LOW ESR,SMD	4	C636, C643, C650, C657
.....5	070-2265-L25	CAP,TANT,22 MFD,20%,25V, E CASE,LOW ESR,SMD	4	C639, C646, C653, C660
.....5	101-0150	Resistor,150 ohm 1/2W 5% SMD 2010	1	R661
.....5	102-0000	RES,CHIP,0 OHM,0805,SMD	5	R600, R623, R703, R915, R916
.....5	102-1000	RES,CHIP,100 OHMS,1/10W,1%,SMD	13	R137, R505, R506, R507, R508, R513, R514, R515, R516, R523, R524, R525, R526

BOM LEVEL	PART NO.	DESCRIPTION	QTY	REF. DES.
.....5	102-1001	RES,CHIP,1.00K OHMS,1/10W,1%,SMD	48	R190, R191, R192, R555, R556, R557, R558, R559, R560, R561, R562, R564, R566, R570, R575, R577, R579, R581, R583, R585, R586, R587, R588, R589, R590, R592, R593, R595, R596, R602, R603, R604, R605, R609, R610, R635, R636, R641, R642, R648, R649, R655, R656, R677, R678, R701, R627, R629
.....5	102-1002	RES,CHIP,10.0K OHMS,1/10W,1%,SMD	43	R503, R511, R519, R520, R521, R529, R530, R533, R534, R535, R536, R537, R538, R544, R545, R546, R547, R548, R549, R551, R552, R553, R554, R597, R599, R626, R632, R638, R643, R645, R650, R652, R657, R662, R663, R668, R669, R670, R671, R692, R693, R694, R695
.....5	102-1004	RES,CHIP,1.00M OHMS,1/10W,1%,SMD	6	R509, R510, R517, R518, R527, R528
.....5	102-1063	RES,CHIP,100K OHMS,1/10W,5%,SMD	3	R531, R532, R700
.....5	102-1133	RES,CHIP,110 OHMS,1/10W,1%,SMD	1	R501
.....5	102-1200	RES,CHIP,121 OHMS,1/10W,1%,SMD (NOTE)	2	R612, R616
.....5	102-1214	RES, CHIP, 1.21K OHM, 1/10W, 1%	2	R136, R653
.....5	102-1582	RES,CHIP,15.8 K, 1/10 W, 1%	7	R624, R625, R631, R633, R637, R644, R651
.....5	102-1691	RES,CHIP,1.69K OHMS,1/10W,1%,SMD	1	R543
.....5	102-1780	RES,CHIP,178 OHMS,1/10W,1%,SMD	1	R914
.....5	102-2430	RES,CHIP,243 OHMS,1/10W,1%,SMD, 0805	2	R674, R676
.....5	102-2431	RES,CHIP,2.43K OHMS,1/10W,1%,SMD	1	R646
.....5	102-2741	RES,CHIP,2.74K OHMS,1/10W,1%,SMD	2	R628, R630
.....5	102-3011	RES,CHIP,3.01K OHMS,1/10W,1%,SMD	18	R563, R565, R567, R568, R569, R571, R572, R573, R574, R576, R578, R580, R582, R584, R594, R606, R620, R622

BOM LEVEL	PART NO.	DESCRIPTION	QTY	REF. DES.
.....5	102-3160	RES,CHIP,3.16K OHMS,1/10W,1%,SMD	7	R539, R540, R541, R542, R613, R617, R696
.....5	102-3653	RES,CHIP,365 OHM,1/10W,1%	5	R611, R614, R615, R618, R697
.....5	102-4750	RES,CHIP,475 OHMS,1/10W,1%,SMD	1	R502
.....5	102-5041	RES,4.99K OHM,1/10W,1%	6	R634, R640, R647, R654, R672, R673
.....5	102-5112	RES,CHIP,51.1 OHM,1/10W,1%	3	R522, R621, R666
.....5	102-8164	RES, CHIP, 8.66K OHM, 1/10W, 1% ,CR21-8661F-T	1	R639
.....5	102-8251	RES,8.25K OHMS,1/10W,1%,SMD	1	R598
.....5	104-0000	RES,CHIP,0 OHM JUMPER,0603,SMD	7	R99, R100, R102, R123, R195, R681, R682
.....5	104-0010	RES,CHIP,10.0 OHM,1%,1/16W,0603,SMD	3	R26, R95, R212
.....5	104-0022	RES,CHIP,22.1 OHM,1%,1/16W,0603,SMD	14	R21, R23, R24, R25, R32, R35, R42, R43, R76, R81, R82, R89, R90, R91
.....5	104-0049	RES,CHIP,49.9 OHM,1%,1/16W,0603,SMD	5	R8, R9, R10, R130, R239
.....5	104-0100	RES,CHIP,100 OHM,1%,0.10W,0603,SMD	9	R29, R83, R84, R85, R86, R187, R188, R189, R208
.....5	104-0220	RESISTOR,221ohm,1/16W,SMD,0603	1	R92
.....5	104-0392	RES,CHIP,392 OHMS,1%,1/16W,0603,SMD	1	R16
.....5	104-0634	RES,CHIP,634 OHMS,1%,1/10W,0805,SMD	2	R504, R512
.....5	104-1001	RES,CHIP,1.0 K OHM,1%,1/16W,0603,SMD	58	R11, R12, R13, R14, R15, R47, R48, R52, R53, R54, R55, R60, R61, R62, R63, R64, R65, R66, R67, R68, R69, R70, R71, R72, R73, R74, R75, R79, R103, R105, R106, R107, R108, R109, R110, R111, R112, R113, R114, R115, R116, R117, R118, R119, R120, R121, R126, R133, R134, R145, R164, R172, R175, R659, R660, R689, R6
.....5	104-1002	RES,CHIP,10.0 K OHM,1%,1/16W,0603,SMD	3	R87, R88, R101
.....5	104-1500	RES,CHIP,1.5 KOHM,1%,1/16W,0603,SMD	2	R122, R128
.....5	104-2200	RES,CHIP,2.21KOHM,1%,1/16W,0603,SMD	4	R19, R20, R104, R129
.....5	104-2201	RES,CHIP,22.1Kohm,1%,1/16W,0603,SMD	4	R77, R78, R165, R166
.....5	104-3301	RES,CHIP,3.32Kohm,1%,1/16W,0603,SMD	2	R201, R203
.....5	104-3320-001	RES,CHIP,332 OHM,1%,1/16W,0603,SMD	3	R18, R132, R225

BOM LEVEL	PART NO.	DESCRIPTION	QTY	REF. DES.
.....5	104-4700	RES,CHIP,475 OHM,1%,1/16W,0603,SMD	4	R160, R161, R162, R163
.....5	104-4701	RES,CHIP,4.75KOHM,1%,1/16W,0603,SMD	16	R5, R22, R27, R40, R41, R44, R45, R46, R49, R50, R51, R56, R96, R147, R238, R690
.....5	104-4702	RES,CHIP,47.5Kohm,1%,1/16W,0603,SMD	2	R131, R186
.....5	104-6000	RES,604 OHM,1%,1/16W,0603,SMD	3	R93, R94, R124
.....5	104-6004	RES,60.4 OHM,1%,1/16W,0603,SMD	1	R169
.....5	104-6810	RES,CHIP,681 OHM,1%,1/16W,0603,SMD	2	R2, R17
.....5	104-8200	Chip Res, 8.25K 1% 1/16W 0603 SMD	1	R204
.....5	105-1010	RES, CHIP, 100 OHM, 1W, 5%, 2512, SMD	1	R913
.....5	198-5034	TRMR,500 OHMS,TOP ADJUST,SMD	1	R608
.....5	201-0012-001	TRANSIENT VOLTAGE SUPPRESSION DIODE, 10v	11	D503, D504, D505, D506, D507, D508, D509, D510, D511, D512, D513
.....5	204-0130	SCHOTTKY BARRIER RECTIFIER 1 AMP 30V CASE 403A SMD	4	D518, D520, D522, D524
.....5	204-0914	DIODE,SWITCHING,MMBD914LT1,SMD	12	D26, D27, D501, D502, D514, D515, D516, D517, D519, D521, D523, D525
.....5	204-2800	DIODE,SCHOTTKY,HSMS-2800,SOT-23	1	D28
.....5	210-0093	TRANSISTOR,BFR93A,SOT-23,SMD	3	Q509, Q510, Q511
.....5	216-3800	IC, OP AMP,QUAD, SINGLE SUPPLY RAIL TO RAIL I/O, SO-14	1	U29
.....5	216-3801	IC, DUAL RF FREQUENCY SYNTHESIZER, TSSOP-20	1	U30
.....5	216-3904	TSTR,MMBT3904LT1,NPN,SMD	3	Q506, Q507, Q508
.....5	216-4071	IC,MC14071BD,QUAD 2-INPUT OR,SMD	1	U502
.....5	216-4227	IC,OPA4227UA,QUAD OP AMP,SO-14,SMD	4	U3, U4, U5, U6
.....5	216-7002	IC,MOSFET,2N7002LT1,SMD	8	Q501, Q502, Q503, Q504, Q505, Q512, Q513, Q515
.....5	216-7400	IC,SN74AHCT1G00DBV,2-INPUT POS NAND,DBV,SMD	4	U13, U505, U508, U527
.....5	220-4052-002	IC,4052 DUAL 4-CH MUX,SMD	2	U506, U507
.....5	221-1105	MMIC,MSA-1105,17DBM,50 OHM	1	U526
.....5	221-2134-001	RAIL TO RAIL I/O OPAMP DUAL SO8	2	U503, U528
.....5	224-0138	IC,74ACT138,3 TO 8 DECODER,SMD note	2	U515, U516
.....5	224-0708	IC, MICRO SUPERVISOR, 3V, SMD	1	U39
.....5	224-1180	IC,DUAL RS232 DRIVER/RECIEVER,18 PIN,S0-18	1	U37
.....5	224-1808	DIGITAL POTENTIOMETER, DS1808Z-050	3	U509, U512, U513
.....5	224-1852	IC, DAC, STERIO, 24 BIT, 192KHZ, 28 PIN, SSOP	1	U10
.....5	224-1896	IC,SAMPLE RATE CONVERTER,STEREO,ASYNCH,192 KHZ,28 PIN,SSOP	1	U18
.....5	224-2227	IC,LOW NOISE OP AMP,8 PIN,S0-8	1	U9

BOM LEVEL	PART NO.	DESCRIPTION	QTY	REF. DES.
.....5	224-3200	IC,STEREO AUDIO CODEC,24 BIT,96KHZ,28 PIN DB,SSOP	1	U21
.....5	224-4456	IC, FPGA, VIRTEX-II 1.5V,456-PIN, BGA	2	U8, U14
.....5	224-6711	IC,FLOATING POINT DSP,150MHZ,256 PIN,BGA (NOTE D.N.S.)	1	U22
.....5	224-8138	IC,DIFFERENTIAL ADC DRIVER,8 PIN,SO-8	1	U2
.....5	224-8414	IC, 96 KHZ DIGITAL AUDIO RECEIVER	1	U501
.....5	224-9260	IC,ADC W/16 BIT RESOLUTION,2.5MHZ WORD RATE,44 PIN,MQFP	1	U1
.....5	224-9772	IC, AD9772A, 14-BIT DAC, 48-LEAD LQFP	1	U12
.....5	226-1000	Res Network, 1K,8 pin, SMD	1	RN1
.....5	226-4701	Res Network, 4.7K ohm, 8 pin, SMD	2	RN2, RN3
.....5	226-4744	RES NET,4.7K,1%,1.13W,9 PIN SIP	1	RP1
.....5	227-0317	VR,LM317T,LM317KC	2	U517, U529
.....5	227-0337	VOLTAGE REGULATOR,3 TERM, NEG	2	U519, U520
.....5	227-1085	VR, LT1085IT, 3A, LOW DROPOUT, TO-220	1	U521
.....5	227-1576	VR, LT1576IS8, SWITCHER, 1.5A, SMD	4	U522, U523, U524, U525
.....5	270-0065	REL,SPDT,12VDC,DIP	1	K503
.....5	270-0065-001	REL,SPDT,12VDC,HIGH ISOLATION,DIP	1	K504
.....5	270-0066	REL,DPDT,12VDC,DIP	2	K501, K502
.....5	270-222-001	CAP,CER,2200PF,10%,50V,0603,SMD	1	C222
.....5	325-0250	LED,DUAL RED/GREEN,LOW PROFILE,SMD	4	DS501, DS502, DS503, DS504
.....5	339-0102	CAP, 1000pF, 50V, 20%, 2706	2	FL508, FL509
.....5	339-0222	FILTER,EMI,2200PF,SMD	6	FL503, FL504, FL505, FL506, FL507, FL510
.....5	340-0004	SW,JUMPER PROGRAMMABLE	9	P4, P12, P19, P27, P30, P506, P509, P515, P529
.....5	350-197	INDUCTOR, SMT, POWER, 1uH	8	L511, L513, L514, L516, L517, L519, L520, L522
.....5	360-0125-001	Inductor 68uH SMD	4	L512, L515, L518, L521
.....5	360-0165	IND, .78 UH, 15A	1	L505
.....5	360-0167	IND, .56 UH, 6A	6	L504, L506, L507, L508, L509, L524
.....5	366-0011	IND,10UH,SHIELDED,SMD	3	L502, L503, L523
.....5	366-0014	INDUCTOR,0.82 uH,CHIP,SMD	1	L525
.....5	366-0015-001	IND,1.5 UH,10%,1210,SMD	2	L29, L30
.....5	366-2204	IND,22 uH,10%,LQH3C220K04,1210,SMD	5	L1, L9, L20, L13, L14
.....5	366-4724	IND,4.7 uH,10%,LQH1N4R7K04M00,1206,SMD	4	L25, L26, L27, L28
.....5	367-9370	XFMR,SMT,AES/EBU,SC937-02	1	T501
.....5	375-0020	TRANSFORMER, RF, 1:1, 0.3-200MHZ, SM-22 PACKAGE	3	T1, T2, T502
.....5	390-0062	CRYSTAL, 12MHZ, 50 PPM TOLERANCE, SMD	1	Y6
.....5	390-1115	OSC,XTAL,10.000MHZ,MODEL T-1115	1	Y501
.....5	390-3072	OSC, VCXO,30.72 MHZ	1	U27

BOM LEVEL	PART NO.	DESCRIPTION	QTY	REF. DES.
.....5	390-6144	CRYSTAL, 6.144MHz, 50PPM, CLOCK OSCILLATOR	1	Y502
.....5	401-275	IC,SMT,OP-AMP,LOW NOISE,HIGH AUDIO BW	3	U504, U510, U511
.....5	408-6000	CONNECTOR, HEADER, 60 PIN, SMD	1	J505
.....5	413-0603	Chip,Test Point 0603 SMD	192	TP1, TP2, TP3, TP4, TP6, TP7, TP8, TP9, TP10, TP11, TP12, TP13, TP14, TP15, TP16, TP17, TP19, TP20, TP21, TP22, TP42, TP43, TP44, TP45, TP46, TP47, TP48, TP49, TP50, TP51, TP52, TP53, TP54, TP55, TP56, TP58, TP59, TP60, TP61, TP62, TP65, TP66, TP67, TP68, TP69, TP70, TP71, TP72, TP73, TP75, TP76, TP78, TP
.....5	417-0265	CONN,BNC,JACK,THREADED,PC EDGE MOUNT,LOW PROFILE	4	J512, J514, J518, J520
.....5	417-0266	CONN,BNC,JACK,PC EDGE MOUNT,LOW PROFILE	1	J513
.....5	417-0308	CONN,JACK,3-PIN,SMD	6	J4, J506, J509, J515, J529, JP30
.....5	417-0506	6 pin single row header .1 center	4	JP3, JP4, JP31, JP32
.....5	417-0512	12 pin header	1	JP13
.....5	417-0903	RCPT, 9 PIN D, FEMALE	1	J9
.....5	417-1093-001	CONN,RECP,DB-9,FILTERED,RT.ANGLE,4-40,PCB MT	1	J519
.....5	417-1603	CONN,HEADER 16-PIN,DUAL 8-PIN	12	JP5, JP6, JP7, JP8, JP9, JP10, JP11, JP12, JP14, JP15, JP16, JP26
.....5	417-1606	CONN,HEADER,16-PIN,PCB MOUNT	1	JP526
.....5	417-1701	STRAIGHT JACK RECEPTACLE,SMB PCB MOUNT 50 OHM	4	J2, J3, J527, J510
.....5	417-4004	CONN,HEADER,2 PIN	1	JP19
.....5	417-6013	MODULE,FIBRE OPTIC RECIEVER,TORX173	1	J504
.....5	418-0051	CONN,AUDIO PC 3 PIN FEM E3FRAB	3	J501, J502, J503
.....5	418-0902	CONN, SOCKET,80 POSITION,DOUBLE ROW, .8MM,SMD	1	J507
.....5	431-1400	SOCKET,14-PIN,DIP,SMD	2	XK503, XK504
.....5	431-1600	SOCKET,16-PIN,DIP,SMD note	2	XK501, XK502
.....5	431-3200	SOCKET,32-PIN,PLCC,SMD note	2	XK24, XK25
.....5	431-4400	SOCKET,44-PIN,PLCC,SMD note	3	XK11, XK38, XK41
.....5	455-0037	HEATSINK,AAVID 530101B00150,PCB MNT W CLIP	1	XU521

BOM LEVEL	PART NO.	DESCRIPTION	QTY	REF. DES.
.....5	455-0071	HEATSINK,CLIP-ON,PCB MT,TO-220	4	XU517, XU519, XU520, XU527
.....5	519-0542	PCB, MACH, DSP, DTC DIGITAL EXCITER	1	
.....5	550-123	Connector, 10 pin header (cut from 550-162)	1	J516
.....6	550-162	Connector, 24 pin break-away (straight) Molex 26-48-6248	0.417	
.....5	919-0542-001	PCB, ASSY, ADAPTOR CS5397->CS5381	1	U1
.....6	007-1034-010	CAP,CER,0.01UF,10V,10%,0402	5	C1, C2, C3, C4, C5
.....6	104-0000	RES,CHIP,0 OHM JUMPER,0603,SMD	1	R1
.....6	104-1001	RES,CHIP,1.0 K OHM,1%,1/16W,0603,SMD	3	R2, R3, R4
.....6	216-5381	IC,AUDIO A/D,192KHZ,120DB,TSSOP-24	1	U1
.....6	519-0542-001	PCB, MACH, ADAPTOR CS5397->CS5381	1	PCB
.....6	979-0542-007	KIT,SOFTWARE, ADAPTOR MICRO, U7	1	U2
.....7	216-0202	IC, 8 BIT FLASH MICROCONTROLLERS, SMD, SOT-23-6	1	U2
.....7	579-0542-100	SOFTWARE, 919-0542-001 U2 MICRO	1	
.....5	979-0542-U11	KIT, SW, XILINX U11	1	U11
.....6	224-1804	IC, PROM, XC18V00 SERIES, 44-PIN, PLCC	1	U11
.....5	979-0542-U24	KIT, SW, DSP FM	1	U24
.....6	224-2901	IC,FLASH MEMORY,1 MBIT,3V ONLY,32 PIN PLCC	1	U24
.....5	979-0542-U38	KIT, SW, DSP MICRO	1	U38
.....6	224-8252	IC,MICROCONTROLLER 8 BIT WITH 8K BYTES FLASH,44 PIN PLCC	1	U38
.....5	979-0542-U41	KIT,SW,XILINX,U41,V1.3,ANALOG ONLY	1	U41
.....6	224-1804	IC, PROM, XC18V00 SERIES, 44-PIN, PLCC	1	U41
.....4	919-0543-100	PCB, ASSY, FXi FRONT PANEL CONTROL/SWITCH BD	1	
.....5	020-4770	CAP,LYTIC,47UF,63V,STDUP	1	C1
.....5	224-3295	TWO LAMP DC TO AC INVERTER SE23295 FOR LQ064V3DG01	1	U1
.....5	334-0010	FUSE, 1A, AXIAL LEADS, FAST ACTING	1	F1
.....5	340-0206	SWITCH, MOM, DPDT, CHROME CAP	11	S1, S2, S3, S4, S5, S6, S7, S8, S9, S10, S11
.....5	417-1606	CONN,HEADER,16-PIN,PCB MOUNT	1	J1
.....5	431-0440	CONN,4 PIN,HV,4MM RT ANGLE, SMD	1	
.....5	519-0543-100	PCB, MACH, FXi FRONT PANEL CONTROL	1	
.....4	919-0556	ASSY, PCB, CLOCK/FILTER, DTG DIGITAL EXCITER (SBCM)	1	
.....5	007-1002	CAP, 1PF,50V SMD 0805	1	C142
.....5	007-1012	CAP,CER,10pF,50V,2%,SMD	5	C117, C127, C128, C129, C130

BOM LEVEL	PART NO.	DESCRIPTION	QTY	REF. DES.
.....5	007-1022	CAP,CER,100pF,50V,2%,SMD	17	C78, C79, C80, C81, C82, C83, C84, C85, C86, C87, C88, C90, C91, C92, C93, C94, C95
.....5	007-1024	CAP,CER,.001uF,50V,10%,SMD	3	C96, C97, C98
.....5	007-1034	CAP,CER,0.01uF,50V,10%,SMD	15	C15, C17, C21, C22, C23, C24, C25, C27, C28, C36, C39, C40, C46, C63, C136
.....5	007-1044	CAP,CER,0.1uF,50V,10%,SMD note	25	C47, C50, C53, C54, C59, C67, C68, C69, C70, C71, C72, C99, C100, C101, C102, C103, C104, C105, C106, C107, C108, C109, C110, C133, C134
.....5	007-1512	CAP,CER,15pF,50V,2%,SMD	2	C121, C141
.....5	007-2012	CAP,CER,20pF,50V,2%,SMD	1	C113
.....5	007-2200	CAP,CER,2.2pF,50V,.25pF,SMD	3	C74, C75, C76
.....5	007-3300	CAP,CER,3.3PF,50V,.25pF,SMD	4	C114, C115, C116, C140
.....5	007-3312	CAP,CER,33pF,50V,2%,SMD	6	C4, C5, C6, C34, C37, C41
.....5	007-4700-500	CAP,CER,4.7pF,50V,.25pF,SMD	2	C138, C139
.....5	007-8200-500	CAP,CER,8.2pF,50V,.25pF,SMD	2	C119, C120
.....5	014-1095	CAP, 1000 UF, 50V	1	C123
.....5	070-1054	CAP,TANT,1uF,35V,10%,SMD	15	C13, C33, C44, C45, C48, C49, C51, C55, C58, C60, C64, C65, C66, C73, C132
.....5	070-1064	CAP,TANT,10uF,35V,20%,SMD	5	C61, C62, C131, C135, C137
.....5	070-1084	CAP,TANT,100uF,16V,10%,SMD	3	C124, C125, C126
.....5	091-0315	CAP, TRIMMER, 3-15 PF, NPO, 50V, SMD	3	C77, C112, C118
.....5	101-0150	Resistor,150 ohm 1/2W 5% SMD 2010	1	R4
.....5	102-0000	RES,CHIP,0 OHM,0805,SMD	1	R13
.....5	102-0100	RES,CHIP,10.0 OHMS,1/10W,1%,SMD	5	R34, R35, R36, R37, R38
.....5	102-1000	RES,CHIP,100 OHMS,1/10W,1%,SMD	21	R28, R39, R40, R41, R42, R43, R44, R45, R46, R47, R48, R49, R50, R51, R52, R53, R54, R55, R56, R57, R58
.....5	102-1001	RES,CHIP,1.00K OHMS,1/10W,1%,SMD	18	R17, R20, R22, R27, R59, R60, R61, R62, R63, R64, R65, R66, R70, R73, R77, R84, R107, R108

BOM LEVEL	PART NO.	DESCRIPTION	QTY	REF. DES.
.....5	102-1002	RES,CHIP,10.0K OHMS,1/10W,1%,SMD	22	R15, R16, R21, R24, R25, R26, R29, R30, R67, R68, R69, R71, R72, R74, R75, R76, R78, R79, R80, R81, R82, R83
.....5	102-1003	RES,CHIP,100K OHMS,1/10W,1%,SMD	1	R104
.....5	102-1825	RES,CHIP,18.2 K OHM,1/10W,1%	1	R23
.....5	102-2000	RES,CHIP,200 OHM,1/10 W,1% SMD	4	R86, R87, R88, R89
.....5	102-2001	RES,CHIP,2.00K OHMS,1/10W,1%,SMD	3	R9, R14, R90
.....5	102-2430	RES,CHIP,243 OHMS,1/10W,1%,SMD, 0805	4	R10, R18, R19, R32
.....5	102-3011	RES,CHIP,3.01K OHMS,1/10W,1%,SMD	2	R105, R106
.....5	102-3321	RES,CHIP,3.32K OHMS,1/10W,1%,SMD	1	R31
.....5	102-4991	RES,CHIP,49.9 OHMS,1/10W,1%,SMD	3	R91, R92, R93
.....5	102-4993	RES,CHIP,499K OHMS,1/10W,1%,SMD	1	R85
.....5	102-5110	RES,CHIP,511 OHMS,1/10W,1%,SMD	1	R102
.....5	102-5143	RES,5.1K OHMS,1/10W,1%,SMD	8	R94, R95, R96, R97, R98, R100, R101, R103
.....5	102-7150	RES,CHIP,715 OHMS,1/10W,1%,SMD	1	R33
.....5	102-7501	RES,7.5K OHMS,1/10W,1%,SMD	1	R99
.....5	105-0051	RES, CHIP, 51 OHM, 1W, 5%, 2512	1	R5
.....5	108-502	Potentiometer, 5K ohms, SMT, Bourns 3224W-1-502E (note)	1	R2
.....5	204-3102	DIODE,MMBV3102LT1,SMD	9	D1, D2, D3, D7, D8, D9, D10, D11, D12
.....5	210-0093	TRANSISTOR,BFR93A,SOT-23,SMD	7	Q1, Q2, Q3, Q4, Q5, Q6, Q7
.....5	216-0310	TSTR,MMBFU310LT1,SMD	3	Q8, Q9, Q10
.....5	216-3904	TSTR,MMBT3904LT1,NPN,SMD	6	Q11, Q12, Q13, Q14, Q15, Q16
.....5	221-0014	MMIC,EC-1078,20DBM,50 OHM (N)	1	U4
.....5	221-0284	DUAL RAIL TO RAIL OP AMP 4 MHZ BW	2	U7, U11
.....5	221-1105	MMIC,MSA-1105,17DBM,50 OHM	1	U2
.....5	221-4110	RF PLL FREQUENCY SYNTHESIZER	1	U12
.....5	224-0138	IC,74ACT138,3 TO 8 DECODER,SMD note	1	U10
.....5	224-1180	IC,DUAL RS232 DRIVER/RECIEVER,18 PIN,S0-18	1	U8
.....5	231-3170	VR,LM317,SMD	2	U5, U9
.....5	325-0250	LED,DUAL RED/GREEN,LOW PROFILE,SMD	1	DS1
.....5	340-0004	SW,JUMPER PROGRAMMABLE	3	P4, P6, P7
.....5	350-025	INDUCTOR, 1.5 - 3 UH WITH SHIELD CAN #47271-021	4	L3, L5, L30, L35
.....5	360-9160	INDUCTOR, VAR, 160 NH, 6%, SHIELDED	2	L4, L32
.....5	366-0011	IND,10UH,SHIELDED,SMD	11	L8, L9, L10, L23, L25, L27, L31, L33, L34, L38, L49
.....5	366-0014	INDUCTOR,0.82 uH,CHIP,SMD	7	L39, L40, L41, L42, L43, L44, L45
.....5	366-0022-001	IND, 22 NH, AIR, 16 MM, 5%, SMD	2	L47, L48
.....5	366-0028	IND,28NH,AIR,16MM,5%,SMD	1	L46
.....5	366-0169	Air Core Inductor 169nH 12 Turns SMD	4	L2, L6, L29, L36

BOM LEVEL	PART NO.	DESCRIPTION	QTY	REF. DES.
.....5	366-0392	IND, 390 NH, SMD	1	L24
.....5	366-0491	Air Core Inductor,491nH,2%,19 Turns,SMD	4	L1, L7, L28, L37
.....5	390-0011	XTAL,32.768KHZ, WATCH TYPE	1	Y1
.....5	417-0070	CONN,HEADER 4 PIN	1	J5
.....5	417-0308	CONN,JACK,3-PIN,SMD	3	J4, J6, J7
.....5	417-0903	RCPT, 9 PIN D, FEMALE	1	J8
.....5	417-1606	CONN,HEADER,16-PIN,PCB MOUNT	1	J3
.....5	417-1701	STRAIGHT JACK RECEPTACLE,SMB PCB MOUNT 50 OHM	4	J1, J2, J10, J11
.....5	417-4004	CONN,HEADER,2 PIN	1	
.....5	479-0175	SHIELD,1.5x1.75"x1.0",PC MOUNT"	3	
.....5	479-0300	SHIELD,1.5x3.0"x1.0",PC MOUNT"	2	
.....5	519-0556	PCB, MACH, CLOCK/FILTER, DTG DIGITAL EXCITER	1	
.....5	979-0556-U6	KIT,SOFTWARE,MICRO,U6,CLOCK/FILTER	1	U6
.....6	220-0814	Microprocessor, ADuC814	1	U6
.....4	919-0557	ASSY, PCB, FRONT PANEL LED, DTC DIGITAL EXCITER	1	
.....5	323-9217	IND,LED,RED 521-9240	1	LED2
.....5	323-9224	IND,LED,GRN,521-9270	1	LED1
.....5	340-0004	SW,JUMPER PROGRAMMABLE	1	P1
.....5	417-4004	CONN,HEADER,2 PIN	2	J2, J3
.....5	418-0255	CONN,MALE,4PIN	1	J1
.....5	441-0009	SPR,PHENOLIC 1/4RND X 1/2 #6	2	
.....5	519-0557	PCB, MACH, FRONT PANEL LED, DTG DIGITAL EXCITER	1	
.....4	919-0600	PCB, ASSY, EXGINE CARD (SBCM)	1	
.....5	006-4775-350	CAP,ELECTRO,47UF,20%,35V,SMD	1	C222
.....5	007-0010	CHIP CERAMIC 10pF 50V 5% 0603 SMD	1	C256
.....5	007-0018-006	CAP,0603,18pF,50V,5%	1	C204
.....5	007-0207-006	CAP,0.27uF,6.3v,10%,0603	1	C202
.....5	007-0270-006	CAP,270pF,50v,5%,0603	1	C53
.....5	007-1013-050	CAP,CER,100 PFD,5%,50V,0603,SMD	2	C36, C261
.....5	007-1022	CAP,CER,100pF,50V,2%,SMD	1	C48
.....5	007-1023-025	CAP,CER,1 NFD,5%,25V,0603,SMD	6	C40, C69, C199, C205, C247, C264
.....5	007-1024	CAP,CER,.001uF,50V,10%,SMD	1	C64

BOM LEVEL	PART NO.	DESCRIPTION	QTY	REF. DES.
.....5	007-1034-001	CAP,CER,.01UF,10%,50V,0603,SMD	144	C17, C18, C19, C71, C73, C74, C75, C76, C77, C78, C79, C80, C81, C82, C83, C84, C85, C86, C87, C88, C89, C90, C91, C92, C93, C94, C95, C96, C97, C98, C99, C100, C101, C102, C103, C104, C105, C106, C107, C108, C109, C110, C111, C112, C113, C114, C115, C116, C117, C118, C119, C120, C121, C122, C123, C124, C125,
.....5	007-1040-025	CAP,CER,.1UF,,-20%,25V,0603,SMD	16	C181, C186, C187, C189, C190, C191, C192, C195, C196, C201, C207, C227, C257, C263, C266, C302
.....5	007-1044	CAP,CER,0.1uF,50V,10%,SMD note	39	C1, C2, C3, C4, C5, C6, C7, C8, C9, C10, C11, C12, C13, C14, C15, C16, C20, C26, C27, C28, C29, C30, C31, C32, C42, C43, C45, C46, C47, C57, C66, C194, C226, C241, C242, C246, C248, C249, C250
.....5	007-1044-016	CAP,CER,100 NFD,10%,16V,0603,SMD	1	C35
.....5	007-1054	CAP,CER,1uF,50V,10%,SMD	9	C21, C22, C23, C24, C25, C59, C61, C254, C258
.....5	007-1075-100	CAP, CER CHIP, 10 UF, 10V, 1206	1	C50
.....5	007-1512-050	Cap,Cer,15 pF 5%,0603,50V,SMD	1	C255
.....5	007-1524-500	CAP,CER,.0015uF,50V,10%,SMD	1	C52
.....5	007-2723-025	CAP,CER,2.7 NFD,10%,25V,1206,SMD	1	C34
.....5	007-2724-500	CAP,CER,.0027uF,50V,10%,SMD	1	C260
.....5	007-3344-016	CAP,CER,330 NFD,10%,16V,1206,SMD	1	C38
.....5	007-3923	CAP,CER,390pF,100V,5%,SMD	2	C62, C63
.....5	007-6800-500	CAP,CER,6.8pF,50V,.25pF,SMD	1	C56
.....5	007-6800-501	CAP,CER,6.8nF,10%,50V,0603,SMD	1	C55
.....5	009-0202	CAP,TANALUM CHIP,100UF,POLAR,10%,6V,SMD	3	C54, C252, C253
.....5	009-0407-001	CAP,4.7uF,12.5v,20%,ELECTROLYTIC,D	1	C203
.....5	064-2262	CAP,TANT,2.2uF,10V,SMD	1	C51
.....5	070-1054	CAP,TANT,1uF,35V,10%,SMD	7	C41, C44, C183, C229, C243, C244, C269

BOM LEVEL	PART NO.	DESCRIPTION	QTY	REF. DES.
.....5	070-1064	CAP,TANT,10uF,35V,20%,SMD	15	C67, C68, C72, C176, C179, C193, C197, C200, C206, C223, C228, C245, C259, C265, C305
.....5	070-1084-L16	CAP,TANT,100 MFD,20%,16V,E CASE,LOW ESR,SMD	4	C37, C39, C58, C65
.....5	070-2204	CAP,TANT,22uF,25V,10%,SMD	3	C33, C60, C262
.....5	070-2265-L25	CAP,TANT,22 MFD,20%,25V, E CASE,LOW ESR,SMD	3	C49, C70, C251
.....5	102-1133	RES,CHIP,110 OHMS,1/10W,1%,SMD	1	R45
.....5	102-1432	RES, CHIP, 14.3K, 1/10W, 1%, SMD	1	R22
.....5	102-1531	RES,150 OHM,1/10W,1%	4	R2, R3, R4, R5
.....5	102-1582	RES,CHIP,15.8 K, 1/10 W, 1%	1	R28
.....5	102-1623	Res,Chip 162K 1/10W 1% SMD	1	R24
.....5	102-1741	RES,CHIP,1.74K OHMS,1/10W,1%,SMD	1	R10
.....5	102-2002	RES,CHIP,20.0K OHMS,1/10W,1%,SMD	1	R43
.....5	102-2430	RES,CHIP,243 OHMS,1/10W,1%,SMD, 0805	1	R192
.....5	102-3001	RES,CHIP,30.1 OHMS,1/10W,1%,SMD	1	R58
.....5	102-3011	RES,CHIP,3.01K OHMS,1/10W,1%,SMD	1	R348
.....5	102-3320	RES,CHIP,332 OHMS,1/10W,1%,SMD	1	R12
.....5	102-4751	RES,CHIP,4.75K OHMS,1/10W,1%,SMD	1	R11
.....5	102-503	POT, 50K OHM 3/8 SQUARE, 1/2W, 10%"	1	R516
.....5	102-5622	RES, 5.62K OHM, 1%, 1/10W, SMD	5	R253, R254, R311, R312, R313
.....5	102-6815	RES,CHIP,68.1K OHM,1/10W,1%	1	R190
.....5	102-9095	RES,90.9K OHM,1/10W,1%,SMD	1	R21
.....5	104-0000	RES,CHIP,0 OHM JUMPER,0603,SMD	8	R54, R59, R61, R65, R72, R193, R316, R458
.....5	104-0010	RES,CHIP,10.0 OHM,1%,1/16W,0603,SMD	2	R20, R379
.....5	104-0022	RES,CHIP,22.1 OHM,1%,1/16W,0603,SMD	223	R13, R14, R15, R16, R17, R18, R19, R82, R83, R84, R85, R86, R87, R88, R89, R90, R91, R92, R93, R94, R95, R96, R97, R98, R99, R100, R101, R102, R103, R104, R105, R106, R107, R108, R109, R110, R111, R112, R113, R114, R115, R116, R117, R118, R119, R120, R121, R122, R123, R124, R125, R126, R127, R128, R129, R130
.....5	104-0049	RES,CHIP,49.9 OHM,1%,1/16W,0603,SMD	2	R63, R194
.....5	104-0051	RESISTOR,51.1ohm1%,1/16W,SMD,0603	4	R66, R76, R186, R324
.....5	104-0820	RESISTOR,825ohm,1%,1/16W,SMD,0603	1	R74

BOM LEVEL	PART NO.	DESCRIPTION	QTY	REF. DES.
.....5	104-1001	RES,CHIP,1.0 K OHM,1%,1/16W,0603,SMD	50	R26, R27, R34, R35, R36, R39, R40, R41, R42, R187, R191, R195, R250, R314, R339, R340, R341, R342, R343, R344, R345, R359, R360, R363, R365, R366, R367, R368, R369, R370, R371, R372, R373, R374, R445, R446, R447, R448, R449, R450, R451, R452, R453, R454, R455, R456, R457, R513, R514, R515
.....5	104-1002	RES,CHIP,10.0 K OHM,1%,1/16W,0603,SMD	33	R23, R25, R29, R33, R38, R44, R46, R47, R48, R49, R50, R51, R52, R53, R55, R79, R184, R185, R327, R328, R329, R330, R331, R332, R333, R334, R335, R336, R337, R338, R346, R347, R443
.....5	104-1201	resistor,1.21Kohm1/16W,1%,SMD,0603	5	R30, R68, R69, R70, R71
.....5	104-1503	RES,CHIP,150K,1%,1/16W,0603,SMD	1	R356
.....5	104-2000	RESISTOR,2Kohm,1/16W,1%,SMD,0603	1	R56
.....5	104-2001	RES, CHIP, 200 OHM, 1%, 1/16W, 0603, SMD	14	R37, R75, R80, R81, R188, R251, R252, R317, R318, R319, R320, R321, R322, R357
.....5	104-4222	RES CHIP, 42.2K, 1%, 1/16W, 0603, SMD	1	R326
.....5	104-4701	RES,CHIP,4.75KOHM,1%,1/16W,0603,SMD	1	R67
.....5	104-4991	RES, CHIP, 4.99K, 1%, 1/16W, 0603, SMD	3	R31, R32, R325
.....5	104-6811	RES,CHIP,6.81 K OHM,1%,1/16W,0603,SMD	1	R9
.....5	104-8200	Chip Res, 8.25K 1% 1/16W 0603 SMD	1	R8
.....5	104-8202	RESISTOR,82.5K,1%,1/16W,SMD,0603	1	R73
.....5	176-2011	RES,TRMR,20K OHM,25T,TOP,3299W	1	R57
.....5	204-0130	SCHOTTKY BARRIER RECTIFIER 1 AMP 30V CASE 403A SMD	1	D4
.....5	204-0340	DIODE,RECTIFIER,SCHOTTKY,MBRS340T3, 403-03 CASE,SMD	2	D1, D9
.....5	204-0914	DIODE,SWITCHING,MMBD914LT1,SMD	1	D3
.....5	204-2800	DIODE,SCHOTTKY,HSMS-2800,SOT-23	2	D5, D6
.....5	204-4150	DIODE,SWITCHING,LL4150,MINIMELF CASE,SMD	1	D2
.....5	210-0093	TRANSISTOR,BFR93A,SOT-23,SMD	2	Q5, Q7
.....5	216-0420	CLC420, HIGH SPEED VOLTAGE FEEDBACK OP AMP SMD	2	U25, U26

BOM LEVEL	PART NO.	DESCRIPTION	QTY	REF. DES.
.....5	216-0634	IC, BUFFER, BUF634U, SO-8, SMD	2	U33, U34
.....5	216-3904	TSTR,MMBT3904LT1,NPN,SMD	3	Q1, Q2, Q3
.....5	216-6245	IC PI74LPT16245AA 16 Bit BIDIR Transcvr 48TSSOP SMD	2	U1, U2
.....5	216-6531	IC, SN65LVDS31D HIGH SPEED DIFFENENTIAL LINE DRIVER SMD	1	U40
.....5	216-7002	IC,MOSFET,2N7002LT1,SMD	2	Q4, Q6
.....5	216-8074	IC,FCT38074,3.3V,CLOCK DRIVER,SOIC	2	U22, U27
.....5	216-8541	IC, DAC 16-BIT SINGLE CH. PQFP-32	1	U20
.....5	221-0358-001	DUAL OP AMP, SMD, SOIC8	1	U23
.....5	224-0160	IC, PAGE FLASH, 16 MEG, SMD (NOTE D.N.S.)	2	U5, U6
.....5	224-0708	IC, MICRO SUPERVISOR, 3V, SMD	1	U4
.....5	224-1204	IC,FPGA,CYCLONE,256-PIN,BGA	1	U18
.....5	224-2045	IC,DUAL,BUS TRANSCEIVER,SSOP-DCT8	1	U37
.....5	224-2410	IC,RS-232 MULTI-TRANSCEIVER,,SMD	1	U7
.....5	224-4001	200MHZ CLOCK GENERATOR PLL	1	U28
.....5	224-4192	IC, 192KHZ DIGITAL AUDIO TRANSMITTER	1	U31
.....5	224-4832	IC,128MB,SDRAM,166MHz,86-PIN,TSOP	5	U14, U15, U16, U17, U30
.....5	224-6373	IC, 16 BIT LATCH, LV, SMD	2	U3, U32
.....5	224-6415	IC,FIXED-POINT DSP,600MHz,532-PIN,BGA	1	U13
.....5	226-4740	RES NET,4.7K,10-PIN,.1 SPACE	3	R1, R6, R7
.....5	227-1576	VR, LT1576IS8, SWITCHER, 1.5A, SMD	1	U12
.....5	227-7650	IC,SWITCHING REGULATOR,3A,300kHz,DFN	1	U11
.....5	231-1374	VR,LT1374HVCS8,SWITCHING,4.5A,SO-8,SMD	1	U9
.....5	231-2700	STEP-UP PWM DC/DC CONVERTOR, 2.5A	1	U21
.....5	298-157	Capacitor,Tantalum,SMT,size X,150uF,16V Kemet T491X157K016AS	4	C180, C306, C307, C308
.....5	325-0251	LED, GRN, SMD, 0805	12	DS5, DS6, DS7, DS8, DS13, DS14, DS15, DS16, DS20, DS21, DS23, DS24
.....5	325-0252	LED,RED/ORN,1206,SMD	5	DS1, DS2, DS3, DS4, DS11
.....5	325-0253	LED,YELLOW,1206,SMD	1	DS12
.....5	325-0255	LED,BLUE, 0603, SMD	3	DS17, DS18, DS19
.....5	340-0004	SW,JUMPER PROGRAMMABLE	3	P14, P15, P18
.....5	342-3304	SW,TACT,SPST,N.O.,SMD,RECESSED	2	S1, S4
.....5	350-197	INDUCTOR, SMT, POWER, 1uH	2	L10, L12
.....5	360-0103	FILTER EMI CHIP, 10000pF 50V 20% SMD	1	FL1
.....5	360-0125-001	Inductor 68uH SMD	1	L11
.....5	360-0167	IND, .56 UH, 6A	1	L22
.....5	366-0010-001	IND,10UH,1.5A	3	L8, L30, L31
.....5	366-0011	IND,10UH,SHIELDED,SMD	2	L9, L17
.....5	366-0180-001	INDUCTOR, 180nH, 10%, SMD, 1008	2	L5, L6
.....5	366-0334	IND,3.3uH,2A,10%,SMD	1	L7
.....5	366-2204	IND,22 uH,10%,LQH3C220K04,1210,SMD	3	L4, L18, L29
.....5	366-3100	FERRITE, 600 OHMS, 1.5 AMP, 100MHz,1206 SMD	6	L15, L16, L20, L21, L23, L24

BOM LEVEL	PART NO.	DESCRIPTION	QTY	REF. DES.
.....5	366-6825	IND,POWER,SHIELDED,6.8 uH,20%,DT3316 CASE,SMD	4	L1, L2, L3, L28
.....5	367-9370	XFMR,SMT,AES/EBU,SC937-02	1	T1
.....5	390-3900	CRYSTAL,OSC,10MHz,VCTXO,SMD	1	Y1
.....5	390-4762	VDUGLA at 47.628 MHz,VCXO SMD	1	U29
.....5	390-5000	XTAL, OSC, 50MHZ, .3VDC, 50PPM	1	U39
.....5	408-0901	CONN, SOCKET, 9 POS, 1 ROW, 2MM	4	J4, J5, J6, J7
.....5	408-1000	HEADER,10-PIN,.100 CENTERS,DIP,note	2	J13, J16
.....5	413-1206	CHIP,TEST POINT,1206,SMD	21	TP1, TP2, TP3, TP4, TP5, TP6, TP7, TP8, TP9, TP10, TP11, TP12, TP13, TP14, TP15, TP16, TP17, TP18, TP21, TP22, TP23
.....5	417-0262	MALE XLR, PANEL MOUNT	1	J26
.....5	417-0265	CONN,BNC,JACK,THREADED,PC EDGE MOUNT,LOW PROFILE	3	J20, J23, J30
.....5	417-0308	CONN,JACK,3-PIN,SMD	3	J14, J15, J18
.....5	417-0331	CONN, 6 PIN, SMD	1	J28
.....5	417-0700	CONN,PCB MT,2PIN	1	J27
.....5	417-0903	RCPT, 9 PIN D, FEMALE	1	J21
.....5	417-1403	CONN,HEADER 14PIN DOUBLE ROW	1	J9
.....5	417-1517	CONN,HDR, 10-PIN SHROUDED PCB MT.	1	J3
.....5	417-1701	STRAIGHT JACK RECEPTACLE,SMB PCB MOUNT 50 OHM	4	J19, J24, J25, J31
.....5	417-5023	RCPT, 50 POS, 2 ROW, PCB, SAMTEC	2	J1, J2
.....5	418-0000	CONN, HEADER, 80 POSITION, DOUBLE ROW, .8MM, EDGEMOUNT	1	J10
.....5	418-1601	CONN,MALE,16-PIN,LATCH,PCB MT	1	J8
.....5	418-2602-001	CONN,HEADER,26 PIN,LATCH/EJECT,PCB	1	J29
.....5	519-0600	PCB MACH, EXGINE CARD	1	PCB1
.....5	979-0545-007	KIT, SOFTWARE, CDROM, EXGINE, HDP-VX.XX	1	
.....6	579-0007	CD-CASE CLEAR PLASTIC	1	
.....6	597-0541-006	APPLICATION GUIDE, FXI 60/250 EXGINE FIRMWARE UPGRADE	1	
.....7	594-9999	PAPER,COPIER 8 1/2 X 11,20LB HI-TEC	0.001	
.....6	701-0018	ANTISTATIC BAG ZIPLOC 9X12 4M	1	
.....6	979-0545-C07	CDROM, EXGINE, HDP-VX.XX	1	
.....7	579-0009	CD-R, BLANK, INKJET PRINTABLE	1	
.....7	579-0600-402	SOFTWARE, EXGINE/NET BURNER, V4.02	1	
.....5	979-0600-401	KIT,SW,NETBURNER,VX.XX,EXGINE	1	
.....6	579-0600-402	SOFTWARE, EXGINE/NET BURNER, V4.02	1	

BOM LEVEL	PART NO.	DESCRIPTION	QTY	REF. DES.
.....6	959-0620	NETBURNER, MOD-5272	1	
.....5	979-0600-S08	SOFTWARE,EXGINE,CPLD,U8	1	U8
.....6	224-9572	IC, CPDL, ZILINX XC9572	1	U8
.....5	979-0600-U19	KIT,SW,FLASH MEMORY,U19,V1.0,EXGINE	1	U19
.....6	216-4008	IC, 4MB FLASH MEMORY SERIAL SOIC-8	1	U19
.....4	949-0540	ASSY, WIRE HARNESS, DTC DIGITAL EXCITER (SBCM)	1	
.....5	402-0051	TY-RAP, W/FLAG	22	
.....5	410-0067	LUG,FEM DISCONNECT 22-18 .230W	2	
.....5	417-0053	SKT,CONN 641294-1 AMP	4	
.....5	417-0096	PLUG,POLARIZING	1	
.....5	417-0123	HSNG,16 POS MOD IV 2-87499-9	1	
.....5	417-0131	CONN,16 PIN 609-1630 ANSLEY	4	
.....5	417-0148	HSNG,10 POS MOD 1V 1-87499-7	1	J2
.....5	417-0224	KEYING PLUG MOD IV 87077 AMP	1	
.....5	417-0372	CONTACT,CONN,FC112N2	7	
.....5	417-0395	CONN, 3 PIN, FEMALE, CABLE CONNECTOR	3	
.....5	417-0465	PIN, CRIMP, SUB-D CONN, 20-24 AWG	31	
.....5	417-0466	SKT, CRIMP, SUB-D CONN, 20-24 AWG	32	
.....5	417-2026	CONN, POLARIZED WIREMOUNT SOCKET, .100 PITCH"	1	
.....5	417-3334	CONN, 60 PIN, RIBBON	2	
.....5	417-3711	CONN SHELL,37-PIN D,MALE	1	
.....5	417-3712	CONN SHELL, 37-PIN D, FEMALE	2	J1
.....5	417-8766	CONTACT,CRIMP,MOD-IV 87809-1	25	
.....5	418-0240	PLUG,FEM,4PIN	1	J9
.....5	550-122	CONNECTOR, 10 PIN MOLEX HOUSING 09-50-8100	2	
.....5	550-183	Connector, 3 pin Molex housing 09-50-8030	2	J5, J6
.....5	550-327	Connector, Crimp Terminal Pin Molex 08-52-0112	22	
.....5	600-0016	CBL,FLAT,16-COND,28GA	0.2	
.....5	600-0016-001	CBL,FLAT,16-COND,28 GA,SHIELDED,JACKETED	2	
.....5	601-1202	WIRE,AWG12 19/25 RED	2.01	
.....5	601-1202-006	WIRE,AWG 12,STRANDED,LIGHT BLUE	2.3	
.....5	601-1202-054	WIRE,AWG 12,STRANDED, GREEN/YELLOW	2.01	
.....5	601-2209	WIRE,AWG22,7/30 WHT	107	
.....5	602-2202	WIRE,TW,AWG22,PVC INS,BLK/RED	1.82	
.....5	610-0007	CBL, 8 COND, #24 W/SHIELD	2.39	
.....5	610-1184	CBL,60COND,28GA,ANSLEY	0.287	
.....5	622-8451	WIRE,BELD 8451,SHIELD,1PR	2.1	
.....5	690-0221	TUB,BLK HEAT SHRINK 3/4	0.1	
.....5	693-0002	SLVG,1/4 EXPANDO FR BLACK"	1.35	
.....4	949-0540-002	RF CABLES, FXi EXCITER VAR LO PWR ATTN (SBCM)	1	
.....5	417-1702	RIGHT ANGLE CRIMP TYPE PLUG,SMB,50 OHM	6	

BOM LEVEL	PART NO.	DESCRIPTION	QTY	REF. DES.
.....5	417-1703	Straight Crimp Type Plug,SMB,50 ohm	1	
.....5	417-8029	CONN,JACK,BULKHEAD,SMA,HEX CRIMP	1	
.....5	417-8030	CONN,PLUG,RT ANG,SMA,HEX CRIMP	1	
.....5	417-8031	CONN,PLUG,STRAIGHT,SMA,HEX CRIMP	1	
.....5	418-0034	PLUG,BNC DUAL CRIMP 1-227079-6	2	
.....5	621-1359	CBL,COAX,RG316/U,50 OHM	5.8	
.....4	949-0545	ASSY,CABLE,IBOC CARD,FXi60/250 (SBCM)	1	
.....5	402-0051	TY-RAP, W/FLAG	2	
.....5	417-1702	RIGHT ANGLE CRIMP TYPE PLUG,SMB,50 OHM	1	
.....5	417-1703	Straight Crimp Type Plug,SMB,50 ohm	1	
.....5	621-1359	CBL,COAX,RG316/U,50 OHM	1.5	
.....4	949-0610	ASSY,CABLE,SERIAL TO EXGINE (SBCM)	1	
.....5	417-0131	CONN,16 PIN 609-1630 ANSLEY	2	
.....5	600-0016	CBL,FLAT,16-COND,28GA	0.5	
.....4	949-0611	ASSY,CABLE,ETHERNET TO EXGINE (SBCM)	1	
.....5	417-2814	PLUG, 8 POS ETHERNET 10BaseT	2	
.....5	622-1245	CBL,ETHERNET,10BASET,CAT5	1	
.....4	949-0612	ASSY,CABLE,I/O TO EXGINE	1	
.....5	418-2600	CONN,26-PIN,RIBBON	2	
.....5	600-0026	CBL,FLAT,26-COND,28GA	0.583	
.....4	949-4263	VGA CABLE	1	
.....4	959-0540	ASSY, DTC EXCITER POWER SUPPLY PANEL (SBCM)	1	
.....5	422-6107	SCREW,SEMS 6-32 X 7/16 PAN PH.ST."	8	
.....5	471-5331	PANEL,POWER SUPPLY,DTC EXCITER	1	
.....5	594-0503	LABEL, DANGER-HAZARDOUS VOLTAGE	1	
.....5	594-0505	LABEL, WARNING-ONLY AUTHORIZED PERSONNEL	1	
.....5	919-0540	ASSY, PCB, DTC EXCITER POWER SUPPLY (sbcm)	1	
.....6	006-1075	CAP,LYTIC,10uF,50V,20%,SMD note	7	C6, C40, C56, C84, C86, C96, C108
.....6	006-1075-350	CAP,LYTIC,10uF,35V,20%,NP,SMD	2	C163, C168
.....6	007-0683	CAP CERAMIC, 0.068uF, 50v, SMD, 0805	1	C30
.....6	007-1022	CAP,CER,100pF,50V,2%,SMD	2	C14, C136
.....6	007-1024	CAP,CER,.001uF,50V,10%,SMD	6	C34, C36, C52, C54, C117, C129
.....6	007-1034	CAP,CER,0.01uF,50V,10%,SMD	2	C57.C159

BOM LEVEL	PART NO.	DESCRIPTION	QTY	REF. DES.
..... 6	007-1044	CAP,CER,0.1uF,50V,10%,SMD note	75	C2, C4, C5, C8, C9, C15, C20, C21, C24, C25, C28, C29, C32, C37, C38, C39, C50, C55, C61, C79, C82, C83, C87, C88, C89, C90, C91, C93, C94, C95, C97, C98, C99, C100, C101, C102, C103, C104, C105, C106, C107, C109, C110, C111, C112, C115, C119, C120, C123, C124, C125, C126, C127, C128, C135, C137, C143, C144, C1
..... 6	007-1044-200	CAP, CHIP, .1UF, 200V, 20%, SMD	3	C3, C46, C134
..... 6	007-1045	CAP,PPS,0.1UF,50V,1%,1913,SMD	1	C160
..... 6	007-1054	CAP,CER,1uF,50V,10%,SMD	10	C11, C12, C92, C113, C114, C81, C161, C165, C166, C173
..... 6	007-1203-500	CAP, CER, 1200 PF, 50V, 5%, SMD	1	C10
..... 6	007-1512-500	CAP,CER,150pF,50V,2%,SMD	6	C60, C65, C73, C140, C141, C142
..... 6	007-2202-100	CAP, 220pF, 100v, SMD	1	C69
..... 6	007-2275-250	CAP,ELECTRO,22UF,20%,25V,SMD	3	C58, C80, C169
..... 6	007-3312	CAP,CER,33pF,50V,2%,SMD	3	C33, C51, C158
..... 6	007-3313	CAP,CER,330pF,50V,5%,SMD	1	C49
..... 6	007-3314	CAP, CER, 3300PF, 50V, 5%, SMD	2	C31, C48
..... 6	007-4724	CAP,CER,0.047uF,50V,10%,SMD	1	C13
..... 6	007-4724-500	CAP,CER,.0047uF,50V,10%,SMD	1	C85
..... 6	007-4744-050	CAP, CER, .47UF, 50V, -20% TO %	7	C16, C35, C53, C62, C66, C70, C74
..... 6	007-6213-500	CAP,CER,620pF,50V,5%,SMD	1	C18
..... 6	007-8201-050	CAP,CER,82 PFD,5%,50V,1206,SMD	1	C17
..... 6	009-1023	CAP,CER CHIP,100PF,500V,5%	6	C43, C44, C121, C122, C132, C133
..... 6	009-1033	CAP,CER CHIP,1000PF,500V,5%	1	C167

BOM LEVEL	PART NO.	DESCRIPTION	QTY	REF. DES.
.....6	009-2723	CAP,CER CHIP,270PF,300V,5%	7	C41, C42, C59, C130, C131, C138, C139
.....6	013-0220	CAP,LYTIC,220uF,450v	1	C78
.....6	013-0470	CAP, LYTIC, 470UF, 450V	2	C19, C77
.....6	013-1095-001	CAP, 1000 UF, 25V	1	C23
.....6	020-1085	CAP,LYTIC,100UF,50V,STDUP,NP	1	C63
.....6	020-2273	CAP,LYTIC,22UF,35V,RADIAL	1	C118
.....6	020-3374	CAP,LYTIC,33UF,25V,NP	1	C171
.....6	020-4770	CAP,LYTIC,47UF,63V,STDUP	5	C22, C71, C72, C75, C76
.....6	020-4785	CAP,LYTIC,470UF,100V,20%,STDUP	3	C26, C45, C47
.....6	023-2273	CAP,LYTIC,220UF,50V,STDUP	1	C64
.....6	024-2274	CAP,LYTIC,22UF,100V,STDUP	2	C7, C27
.....6	024-4783	CAP,LYTIC,470UF,50V,STDUP	2	C67, C68
.....6	033-4763	CAP,POLY FILM,.47UF,600V,OVAL	2	C1, C116
.....6	100-1051	RES,10K OHM,1/4W,1%	2	R45, R46
.....6	101-3013	RES, 301K, 1/8W, 1%, SMD	5	R6, R7, R8, R30, R31
.....6	102-0100	RES,CHIP,10.0 OHMS,1/10W,1%,SMD	3	R16, R63, R66
.....6	102-1001	RES,CHIP,1.00K OHMS,1/10W,1%,SMD	12	R55, R74, R78, R88, R100, R114, R115, R118, R157, R158, R169, R204
.....6	102-1002	RES,CHIP,10.0K OHMS,1/10W,1%,SMD	30	R12, R13, R18, R25, R28, R41, R43, R53, R56, R80, R93, R95, R113, R123, R126, R127, R129, R134, R138, R142, R145, R149, R156, R174, R185, R193, R194, R195, R205, R207
.....6	102-1003	RES,CHIP,100K OHMS,1/10W,1%,SMD	23	R10, R17, R19, R21, R26, R58, R94, R96, R120, R119, R121, R141, R143, R144, R154, R171, R178, R184, R191, R197, R202, R203, R209

BOM LEVEL	PART NO.	DESCRIPTION	QTY	REF. DES.
.....6	102-1004	RES,CHIP,1.00M OHMS,1/10W,1%,SMD	3	R42, R91, R187
.....6	102-1083	RES,CHIP,10M OHM,1/10 W,5%	3	R9, R170, R189
.....6	102-1102	RES,CHIP,11.0K OHMS,1/10W,1%,SMD	2	R140, R136
.....6	102-1136	RES,CHIP,113K OHM,1/10 W,1%	2	R135, R139
.....6	102-1186	RES, CHIP, 118K OHM, 1/10W, 1%	1	R208
.....6	102-1200	RES,CHIP,121 OHMS,1/10W,1%,SMD (NOTE)	5	R83, R85, R86, R87, R188
.....6	102-1331	RES,CHIP,1.33K OHMS,1/10W,1%,SMD	19	R22, R23, R79, R89, R90, R102, R132, R146, R155, R159, R160, R161, R162, R163, R164, R165, R166, R167, R168
.....6	102-1432	RES, CHIP, 14.3K, 1/10W, 1%, SMD	1	R38
.....6	102-1500	RES,CHIP,150 OHMS,1/10W,1%,SMD	2	R101, R186
.....6	102-1501	RES,1.50K OHM,1/10W,1%	1	R37
.....6	102-1503	RES,CHIP,150K OHMS,1/10W,1%,SMD	2	R29, R2
.....6	102-1582	RES,CHIP,15.8 K, 1/10 W, 1%	1	R128
.....6	102-1825	RES,CHIP,18.2 K OHM,1/10W,1%	1	R35
.....6	102-1826	RES,CHIP,182K,1/10W,1%,SMD	1	R27
.....6	102-2001	RES,CHIP,2.00K OHMS,1/10W,1%,SMD	3	R71, R76, R206
.....6	102-2002	RES,CHIP,20.0K OHMS,1/10W,1%,SMD	4	R33, R72, R92, R196
.....6	102-2201	RES,CHIP,22.1 OHM,1/10W,1%	4	R24, R50, R62, R69
.....6	102-2216	RES,CHIP,221K OHM,1/10W,1%	1	R49
.....6	102-2341	RES,2.32K OHM,1/10W,1%	1	R112
.....6	102-2615	RES,26.1K OHM,1/10W,1%	1	R130
.....6	102-3160	RES,CHIP,3.16K OHMS,1/10W,1%,SMD	5	R34, R36, R116, R117, R153
.....6	102-3570	RES,CHIP,357 OHMS,1/10W,1%,SMD	1	R152
.....6	102-4022	RES,CHIP,40.2K OHMS,1/10W,1%,SMD	2	R148, R182
.....6	102-4321	RES,CHIP,4.32K OHMS,1/10W,1%,SMD	1	R70

BOM LEVEL	PART NO.	DESCRIPTION	QTY	REF. DES.
.....6	102-4992	RES,49.9K OHMS,1/10W,1%,SMD	4	R44, R122, R124, R151
.....6	102-4993	RES,CHIP,499K OHMS,1/10W,1%,SMD	1	R15
.....6	102-5041	RES,4.99K OHM,1/10W,1%	2	R75, R77
.....6	102-5231	RES,5.23K OHM,1/10W,1%	1	R179
.....6	102-6191	RES, CHIP, 6.19K OHM, 1/10W, 1%	1	R57
.....6	102-6193	RES,CHIP,619 OHM,1/10W,1%	1	R173
.....6	102-6341	RES,CHIP,6.34K,1/10W,1%,SMD	1	R192
.....6	102-6982	RES,CHIP,69.8K,1/10W,1%,SMD	3	R133, R137, R14
.....6	102-7501	RES,7.5K OHMS,1/10W,1%,SMD	4	R20, R54, R73, R150
.....6	102-8454	RES,CHIP,8.45K OHM,1/10W,1%	3	R131, R125, R183
.....6	102-9094	RES,CHIP,9.09K OHM,1/10W,1%	2	R11, R147
.....6	102-9095	RES,90.9K OHM,1/10W,1%,SMD	1	R32
.....6	102-9101	RES CHIP 90.9 OHM 1/10W 1%	1	R82
.....6	103-1007	RES,1 MEG OHM,1/4W,1%,METAL	4	R39, R40, R47, R48
.....6	103-1584	RES,1.58K OHM,1/4W,1%,METAL	4	R51, R97, R98, R99
.....6	103-7503	RES,750 OHM,1/4W,1%,METAL	1	R52
.....6	110-5623	RES,56 OHM,1/2W,5%	2	R67, R68
.....6	110-8223	RES,82 OHM,1/2W,5%	1	R190
.....6	111-0002	.02 OHM 3W CURRENT SENSE RES, SMT	3	R3, R4, R5
.....6	120-1043	RES,1K OHM,1W,5%	1	R201
.....6	130-0100	RES, 250 VAC, 7A, FUSED	1	R1
.....6	130-1033-300	RES,100 OHM,3W,1%	2	R64, R65
.....6	130-1843	RES,1.8K OHM,2W,5%	2	R81, R198
.....6	130-2223	RES,22 OHM,2W,5%	2	R210, R211
.....6	130-2263	RES,220K OHM,2W,5%	6	R107, R108, R109, R175, R176, R177
.....6	130-3333	RES,330 OHM,2W,5%	2	R199, R200

BOM LEVEL	PART NO.	DESCRIPTION	QTY	REF. DES.
.....6	140-0037	VARISTOR,V275LA40A	3	MOV1, MOV2, MOV3
.....6	140-0039	VARISTOR,V320LA40B	1	MOV4
.....6	200-1520	DIODE, 15A, 200V	4	D43, D44, D45, D46
.....6	200-1620	DIODE,FAST RECOVERY,16JPF20	1	D37
.....6	200-3030	DIODE, 300V, 30A, SWITCHING	1	D36
.....6	203-0360	DIODE,SCHOTTKY,3A,60V,MBR360	1	D24
.....6	203-5817	DIODE, 1N5817, 1A, 20V	2	D15, D64
.....6	203-5820	DIODE, 1N5820, 3A, 20V	1	D14
.....6	204-0037	DIODE,ZENER,7.5V,225mW,SMD	2	D16, D70
.....6	204-0040	DIODE,ZENER,12V,6%,1W,SMAZ12-13,SMD	2	D32, D42
.....6	204-0041	DIODE,ZENER,15V,225mW,SMD	2	D5, D72
.....6	204-0043	DIODE,ZENER,43V,225mW,SMD	1	D71
.....6	204-0336	DIODE,REFERENCE,2.5V,SMD	3	D23, D52, D53
.....6	204-0914	DIODE,SWITCHING,MMBD914LT1,SMD	38	D6, D7, D8, D12, D13, D20, D22, D30, D31, D41, D47, D48, D49, D50, D51, D54, D55, D56, D57, D58, D59, D60, D61, D62, D63, D65, D66, D67, D68, D69, D78, D81, D82, D85, D86, D87, D88, D89
.....6	204-4005	DIODE, 1A, 600V, 4005, SMD	9	D17, D18, D26, D27, D28, D38, D39, D83, D84
.....6	206-0024	TRANSZORB DIODE, 24V, 1.5KE24CA	2	D74, D75
.....6	206-0300	TRANSZORB,300V ,SMD	3	D77, D79, D80
.....6	210-0520	HEXFET IRFI520G	2	Q6, Q26
.....6	210-1201	FET, SWITCHING, 1200VDC 8A, 2.1 OHMS RDS ON	1	Q10
.....6	210-5085	RF FET 85MOHM 500V	3	Q2, Q8, Q9
.....6	216-0113	IC, OPTO, HIGH SPEED	1	U11
.....6	216-0337	VR, LM337 NEGATIVE, SMD	1	U24

BOM LEVEL	PART NO.	DESCRIPTION	QTY	REF. DES.
.....6	216-0339	IC,LM339AM,VOLTAGE COMPARATOR,SMD	4	U1, U20, U22, U23
.....6	216-0433	IC,OPTO PS2705-1,SMD	8	U13, U14, U15, U18, U19, U21, U25, U26
.....6	216-3825	IC, PWM, UC3825DW, SMD	2	U7, U10
.....6	216-3854	IC, PFC UC3854DW, SMD	1	U4
.....6	216-4081	IC,MC14081BD,QUAD 2-INPUT AND,SMD	1	U3
.....6	216-4093	IC,MC14093BD,QUAD 2-INPUT NAND,SMD	1	U16
.....6	216-4420	IC, DRIVER, TC4420, 6A	1	U9
.....6	216-4538	IC,MC14538BD DUAL MULTIVIBRATO,SMD	1	U29
.....6	216-7002	IC,MOSFET,2N7002LT1,SMD	23	Q1, Q3, Q4, Q5, Q7, Q11, Q12, Q13, Q14, Q15, Q16, Q17, Q18, Q19, Q20, Q21, Q22, Q23, Q24, Q25, Q27, Q28, Q29
.....6	220-4429	IC,DRIVER,MOSFET,TC4429CAT (N)	1	U12
.....6	227-0317	VR,LM317T,LM317KC	2	U17, U27
.....6	227-2576-012	VR, 흥 FIXED VOLTAGE REGULATOR 3A, SWITCHER, LM2576HVT-12	1	U6
.....6	229-1750	TMP01FP TEMPERATURE SENSOR CHIP	1	U28
.....6	230-0013	RECT,FAST RECOVERY,FEN30JP	1	D25
.....6	230-0015	RECT,SILC,MR2406	4	D1, D2, D3, D4
.....6	230-0017	RECT,PWR SWITCHMOD MUR4100E	2	D34, D35
.....6	239-0001	BRDG RECT,FULL WAVE 2 AMP,200V	2	D19, D21
.....6	270-0066	REL,DPDT,12VDC,DIP	2	K4, K5
.....6	270-1213	REL,SPST,30A	3	K1, K2, K3
.....6	320-0011	LED,R.ANGLE PCB RED 5300E1 1D1	11	DS1, DS5, DS6, DS7, DS8, DS9, DS10, DS11, DS12, DS13, DS14
.....6	330-0004	FUSE,500MA,5X20MM,250V,SLO-BLO	2	F8, F10
.....6	330-0006	FUSE,1.5A,2014,FAST-ACTING	1	F6
.....6	330-0007	FUSE,4A,2014,FAST-ACTING	2	F4, F7

BOM LEVEL	PART NO.	DESCRIPTION	QTY	REF. DES.
.....6	330-0009	FUSE,10A,2014,FAST-ACTING	1	F5
.....6	330-0800-001	FUSE,8A,250V,3AG,SLO-BLO	1	F9
.....6	330-1500-001	FUSE, 15A, 250V, CERAMIC, SLO-BLOW	2	F1, F2
.....6	334-1150	FUSE,5 X 20MM,1.5A,SLO-BLO	1	F3
.....6	340-0004	SW,JUMPER PROGRAMMABLE	2	P6, P7
.....6	360-0165	IND, .78 UH, 15A	2	L4, L6
.....6	360-0167	IND, .56 UH, 6A	3	L5, L7, L8
.....6	360-0170	IND, 100 UH, 14A	1	L3
.....6	360-5812	IND, POWER SUPPLY PFC	1	L1
.....7	375-5812	CORE, PS PFC INDUCTOR (NOTE)	2	
.....7	640-1800	WIRE AWG 18 EN MAGNET	0.044	
.....6	366-0331	IND, 330 UH, 1A RMS, SMD	1	L2
.....6	370-0064	XFMR, 48V SUPPLY, DTC EXCITER	1	T3
.....6	370-0065	XFMR FLYBACK SUPPLY DTC EXCITER	1	T4
.....6	370-0066	XFMR,DRIVE,POWER SUPPLY,DTC EXCITER	1	T6
.....6	370-0150	XFMR, CURRENT SENSE, 50:1	2	T2, T5
.....6	376-0257	XFMR, LOW VOLTAGE	1	T1
.....6	402-0015	TIE,CBL,PANDUIT, 7 3/8 LONG"	4	
.....6	409-0033	INSULATOR, TO247-2, 86/37 KERATHERM, .225MM THK.	3	
.....6	413-1206	CHIP,TEST POINT,1206,SMD	25	TP1, TP2, TP3, TP4, TP5, TP6, TP7, TP8, TP9, TP10, TP11, TP12, TP13, TP14, TP15, TP16, TP17, TP18, TP19, TP20, TP21, TP22, TP23, TP24, TP25
.....6	415-2068	CLIP,FUSE,15AMP,LITTLEFUSE,102071	6	XF1, XF2, XF9
.....6	415-2069	CLIP,FUSE,LITTLEFUSE,111501	6	XF3, XF8, XF10
.....6	417-0044	CONN,10 PIN SINGLE ROW HEADER	2	J2, J8

BOM LEVEL	PART NO.	DESCRIPTION	QTY	REF. DES.
.....6	417-0308	CONN,JACK,3-PIN,SMD	2	J6, J7
.....6	417-0398	CONN, MALE PCB MT	2	J1, J3
.....6	417-0804	SOCKET,8-PIN DIP,BURNDY	1	XU28
.....6	418-451	Diode, SMT, Zener, 5.1V Motorola BZX84C5V1LT1	2	D29, D33
.....6	420-4108	SCREW,4-40X.500,S.S. PH	3	
.....6	420-6104	SCREW,6-32X.250,S.S. PH	3	
.....6	420-6106	SCREW,6-32X.375,S.S. PH	4	
.....6	421-6001	6-32 S.S. HEX THIN NUT	4	
.....6	423-4001	#4 FLAT SS .250 X .125 X .018	3	
.....6	423-4002	#4 LOCK S.S. SPLIT	3	
.....6	423-6001	#6 FLAT .250 X .150 X .015	3	
.....6	423-6002	#6 LOCK SPLIT	10	
.....6	441-0012	STOFF,#6-32 MALE-FEMALE 1/4	3	
.....6	441-0215	SPACER, RESISTOR	2	
.....6	455-0037	HEATSINK,AAVID 530101B00150,PCB MNT W CLIP	4	XD36, XD37, XQ8, XQ9
.....6	455-0071	HEATSINK,CLIP-ON,PCB MT,TO-220	3	XU6, XD43, XD44
.....6	455-0075	HEATSINK,TO-220 PKG,.85 TALL	4	XD1, XD2, XD3, XD4
.....6	455-8000-001	HEATSINK,2 INCH,A" VERSION AM"	1	
.....6	519-0540	PCB, MACH, DTC EXCITER POWER SUPPLY	1	
.....6	550-123	Connector, 10 pin header (cut from 550-162)	1	J4
.....7	550-162	Connector, 24 pin break-away (straight) Molex 26-48-6248	0.417	
.....6	550-186	Connector, 3 pin Molex header (cut from 550-162)	1	J5
.....7	550-162	Connector, 24 pin break-away (straight) Molex 26-48-6248	0.125	
.....6	601-1893	WIRE,AWG18,19/30,TFE INS,WHT	0.417	
.....6	611-0060	TUB, HT SHK, 1/16	0.17	
.....6	611-3750	TUB,HT SHK,3/8	0.083	

BOM LEVEL	PART NO.	DESCRIPTION	QTY	REF. DES.
.....4	959-0545	ASSY, POWER AMP, 250W DTC DIGITAL EXCITER	1	
.....5	130-5623	RES,560 OHM,2W,5%	1	R165
.....5	131-5034	RES,50 OHM,250W,5%,ALN,FLANGE MT	2	R92, R93
.....5	210-2918	TSTR, RF POWER, SD2918	1	Q9
.....5	210-2931	TSTR, RF POWER, SD2931-10	2	Q10, Q11
.....5	360-0150-001	COIL, 18AWG, 0.25 IN. DIA., 22T	1	
.....6	640-1800	WIRE AWG 18 EN MAGNET	0.03	
.....5	360-0168	COIL,16GA,4.5T,50nH (SBCM)	3	L8, L12, L15
.....6	640-1600	WIRE,ENAMELED 16GA.	0.003	
.....5	360-0169	COIL,14GA,2.5T,70nH (SBCM)	4	L16, L17, L18, L19
.....6	640-1400	WIRE,14GA,MAGNET	0.005	
.....5	420-2107	SCREW,2-56X.437,S.S. PH SC	8	
.....5	420-4106	SCREW,4-40X.375,S.S. PH	10	
.....5	421-6908	SHEET EDGE CONNECTOR 6-32	3	
.....5	422-6107	SCREW,SEMS 6-32 X 7/16 PAN PH.ST."	21	
.....5	423-2002	#2 LOCK SPLIT	8	
.....5	423-4002	#4 LOCK S.S. SPLIT	10	
.....5	427-0061	CONNECTOR, N, PCB, STRAIGHT, PNL MTG	1	J7
.....5	455-8012	HEATSINK,AMPLIFIER,DTC EXCITER	1	
.....5	469-0000	FINGERSTOCK,CLIP-ON,LAIRD 97-973	6	
.....5	469-0366	FINGER STOCK (NOTE!!!!!)	14	
.....5	471-5332	SHIELD,POWER AMPLIFIER,DTC EXCITER	1	
.....5	471-5342	SPACER,90 DEGREE HYBRID,DTC EXCITER AMPLIFIER	2	
.....5	471-5345	SHIELD, POWER AMPLIFIER, FXi60	1	
.....5	471-5346	SHIELD, COIL, P.A., FXi60/250	1	
.....5	519-0555	PCB, MACH, POWER AMP, SUB BOARD	1	
.....5	565-0001	COUPLER, 3DB, 600W, 70-110 MHZ, PCB MT	2	HY1, HY2
.....5	594-0503	LABEL, DANGER-HAZARDOUS VOLTAGE	1	
.....5	919-0545	PCB, ASSY, POWER AMP, 250W DTC DIGITAL EXCITER (SBCM)NOTE!!!	1	
.....6	003-0105	CAP, CER, 1UF, 100V, 1812, 20%, SMD	2	C44, C49
.....6	006-1006	CAP,47 uF,Electrolytic,63V,SMD (NOTE)	4	C31, C37, C55, C62
.....6	006-1075-350	CAP,LYTIC,10uF,35V,20%,NP,SMD	3	C24, C46, C47
.....6	007-1012	CAP,CER,10pF,50V,2%,SMD	2	C26, C77
.....6	007-1024	CAP,CER,.001uF,50V,10%,SMD	9	C19, C21, C25, C34, C45, C48, C72, C80, C98
.....6	007-1044	CAP,CER,0.1uF,50V,10%,SMD note	22	C1, C5, C7, C14, C15, C16, C18, C20, C22, C23, C73, C74, C79, C81, C86, C84, C85, C87, C88, C90, C91, C92

BOM LEVEL	PART NO.	DESCRIPTION	QTY	REF. DES.
.....6	007-1044-200	CAP, CHIP, .1UF, 200V, 20%, SMD	13	C2, C3, C4, C6, C8, C9, C10, C11, C12, C13, C94, C95, C99
.....6	007-1054	CAP,CER,1uF,50V,10%,SMD	1	C35
.....6	007-1054-001	CAP,CER,1UF,10%,10V,X7R,0805,SMD	4	C100, C101, C102, C103
.....6	007-1075-100	CAP, CER CHIP, 10 UF, 10V, 1206	1	C71
.....6	007-2202-500	CAP,CER,22pF,50V,2%,SMD	1	C78
.....6	007-2704-001	CAP, EMI FILTER, SMD	9	FL10, FL11, FL12, FL13, FL14, FL15, FL16, FL17, FL20
.....6	007-3312	CAP,CER,33pF,50V,2%,SMD	1	C76
.....6	009-1013	CAP,CER CHIP,10PF,500V,5%	1	C29
.....6	009-1023	CAP,CER CHIP,100PF,500V,5%	6	C56, C57, C63, C64, C104, C105
.....6	009-3313	CAP,33pF,PORCELAIN,500V,5%,SMD	5	C38, C41, C52, C66, C70
.....6	009-4723	CAP,CER CHIP,470PF,200V,5%	12	C27, C30, C32, C36, C39, C40, C53, C54, C59, C60, C65, C89
.....6	009-6210-001	CAP,CER CHIP,6.2PF,0.1PF,500V (NOTE)	1	C28
.....6	009-6813	CAP,CER CHIP,68PF,500V,5%	5	C58, C61, C67, C68, C69
.....6	009-8013	CAP,CER CHIP,82PF,500V,5%	5	C33, C42, C43, C50, C51
.....6	020-4785	CAP,LYTIC,470UF,100V,20%,STDUP	2	C106, C107
.....6	070-1064	CAP,TANT,10uF,35V,20%,SMD	2	C82, C83
.....6	102-0000	RES,CHIP,0 OHM,0805,SMD	17	R2, R3, R10, R11, R12, R13, R14, R15, R56, R66, R67, R77, R113, R115, R120, R163, R166
.....6	102-1001	RES,CHIP,1.00K OHMS,1/10W,1%,SMD	27	R4, R5, R22, R23, R24, R25, R26, R27, R31, R73, R82, R86, R87, R89, R90, R63, R64, R133, R154, R155, R156, R157, R158, R159, R160, R161, R162

BOM LEVEL	PART NO.	DESCRIPTION	QTY	REF. DES.
.....6	102-1002	RES,CHIP,10.0K OHMS,1/10W,1%,SMD	27	R1, R32, R33, R36, R37, R38, R39, R40, R43, R45, R46, R49, R54, R55, R58, R60, R61, R62, R65, R108, R123, R127, R129, R131, R134, R146, R147
.....6	102-1003	RES,CHIP,100K OHMS,1/10W,1%,SMD	1	R7
.....6	102-1212	RES,CHIP,12.1K OHMS,1/10W,1%,SMD	2	R16, R21
.....6	102-1510	RES, 15 OHM, 1/10W, 1%	12	R41, R51, R52, R53, R59, R70, R118, R124, R125, R126, R132, R151
.....6	102-2002	RES,CHIP,20.0K OHMS,1/10W,1%,SMD	8	R35, R42, R44, R47, R117, R128, R130, R150
.....6	102-2210	RES,CHIP,221 OHMS,1/10W,1%,SMD	14	R97, R98, R99, R100, R101, R102, R104, R106, R107, R121, R122, R135, R136, R152
.....6	102-3010	RES, CHIP, 301 OHMS, 1/10W, 1%, SMD	5	R34, R71, R72, R116, R119
.....6	102-3012	RES,CHIP,30.1K,1/10W,1%,SMD	4	R17, R18, R19, R20
.....6	102-4992	RES,49.9K OHMS,1/10W,1%,SMD	2	R8, R9
.....6	102-5110	RES,CHIP,511 OHMS,1/10W,1%,SMD	2	R96, R110
.....6	102-6409	RES,CHIP,64.9 OHMS,1/10W,1%,SMD	2	R48, R94
.....6	102-7521	RES,CHIP,75 OHMS,1/10W,1%,SMD	3	R95, R111, R112
.....6	104-0301	RES, CHIP, 301 OHM, 1%, 1/2W, 2010, SMD	1	R148
.....6	105-0001	RES, 1 OHM, 1%, 1/2W, SMD, 2010	1	R6
.....6	105-0010	RES, CHIP, 10 OHM, 1W, 1%, 2512	3	R103, R105, R164
.....6	105-0043	RES,CHIP,43 OHM,5%,1W,SMD	1	R79
.....6	105-0120	RES, CHIP, 120 OHM, 1W, 5%, 2512	2	R78, R80
.....6	111-0001	.01 OHM 2W CURRENT SENSE RES SMT	3	R28, R29, R30
.....6	185-103	Resistor, 10K ohm 1/8 watt 1% chip Dale CRCW1206-10K	3	R74, R75, R76
.....6	198-0503	TRMR,50K,TOP ADJUST,SMD	2	R50, R57

BOM LEVEL	PART NO.	DESCRIPTION	QTY	REF. DES.
.....6	198-1044	TRMR,1K OHMS,TOP ADJ,SMD	1	R109
.....6	198-2024	TRMR,2K OHMS,TOP ADJUST,10 TURN,SMD	4	R68, R83, R88, R153
.....6	201-2801	DIODE,HOT CARRIER,MMBD701LT1,SMD	3	D3, D11, D12
.....6	204-0914	DIODE,SWITCHING,MMBD914LT1,SMD	5	D1, D2, D5, D8, D10
.....6	210-0010	TSTR, MOSFET, 12A, 100V, N-CHANNEL, DPAK, SMT	1	Q12
.....6	210-1000	DIODE, ZENER, 10V, 225MW, SMD, SOT23	3	D6, D13, D14
.....6	210-1150	DIODE, ZENER, SMT, 15V, 3W, D0-214AA	3	D4, D7, D9
.....6	210-3310	P CHAN ENH MODE FET 60V SOT23	4	Q1, Q2, Q3, Q4
.....6	210-3906-001	TSTR,3906,SMD	1	Q6
.....6	210-5700	RF POWER TRANSISTOR, PD57002	1	Q8
.....6	216-3904	TSTR,MMBT3904LT1,NPN,SMD	2	Q5, Q7
.....6	220-0035	IC,LM35DZ CELSIUS TEMP SENSOR	1	U6
.....6	221-0074-S	IC,TL074 OP-AMP,QUAD,SMD	3	U1, U4, U8
.....6	221-0284	DUAL RAIL TO RAIL OP AMP 4 MHZ BW	2	U2, U3
.....6	221-8361	IC, TRUE AVERAGE POWER DETECTOR	1	U7
.....6	231-7805	VR,78L05AC,POS VOLT,100mA,SMD	1	U5
.....6	330-0060	FUSE, SMD, 1206, 1A, 63V	3	F3, F4, F5
.....6	330-0061	FUSE, SMD, 15A, 65V	2	F1, F2
.....6	350-188	INDUCTOR, 1210 1uH CHIP	4	L1, L7, L10, L11
.....6	350-203	IND, SMT, 1812, 33 NH	1	L6
.....6	366-0100	IND,100NH LAMINATED CER,0805,SMD	2	L20, L21
.....6	366-0126	INDUCTOR,SMD,AIR CORE,11T,130nH	1	L5
.....6	366-0127	INDUCTOR,SMD,AIR CORE,20T,538nH	1	L3
.....6	366-0128	INDUCTOR,SMD,AIR CORE,100nH	1	L2
.....6	366-0130	INDUCTOR,POWER,SMD,1uH,10A	4	L4, L9, L13, L14
.....6	366-6152	FERRITE,CHIP IMPEDANCE 1500OHMS @ 100MHZ MULTILAYER, 0805	8	FL1, FL2, FL3, FL4, FL5, FL6, FL7, FL8

BOM LEVEL	PART NO.	DESCRIPTION	QTY	REF. DES.
.....6	407-0500	EMI SHIELD, MODIFIED 50KE-CBSAFN-.75x1.5x.50	1	
.....6	407-0501	EMI SHIELD, MODIFIED 50KE-CBSAFN-2.5x3.25x.50	1	
.....6	417-0214	CONN,HEADER 20 PIN R.ANGLE	1	J1
.....6	417-0265	CONN,BNC,JACK,THREADED,PC EDGE MOUNT,LOW PROFILE	1	J4
.....6	417-0398	CONN, MALE PCB MT	1	J3
.....6	417-0701	CONN,SMA FEMALE PC MOUNT	2	J2, J6
.....6	471-8050	MICROSTRIP OVERLAY	2	W5, W6
.....6	519-0545	PCB, MACH, POWER AMP, 250W DTC DIGITAL EXCITER	1	
.....6	550-186	Connector, 3 pin Molex header (cut from 550-162)	1	J5
.....7	550-162	Connector, 24 pin break-away (straight) Molex 26-48-6248	0.125	
.....6	809-0180	JUMPER, COAX, SEMI-RIGID, 1.8 IN	1	W4
.....6	809-0350	JUMPER, COAX, SEMI-RIGID, 3.5 IN	1	W3
.....4	959-0600	ASSY,SUB,EXGINE,ETHERNET & I/O	1	
.....5	400-0600	STRIP,QUIET SHIELD,6.00x.197	2	
.....5	418-1550-010	CONN, PLUG 10-PIN CAGE CLAMP 3.81MM SPACING	2	P4, P5
.....5	420-0817	ASSY,FEMALE SCREWLOCK 205817-1	1	
.....5	422-6107	SCREW,SEMS 6-32 X 7/16 PAN PH.ST."	6	
.....5	441-2114	STOFF,ALUM 1/4HEX X 1 6-32	2	
.....5	471-5369	FILLER,OPTIONS,ETHERNET,FXi60/250	1	
.....5	919-0601	PCB, ASSY, EXGINE INPUT/OUTPUT	1	
.....6	417-1550-010	CONN, HEADER RT.ANGLE 10-PIN 3.81MM SPACING PCB MT	2	J4, J5
.....6	417-2609	CONN, HDR, 26 PIN, R. ANGLE SHROUDED	1	J29
.....6	421-6908	SHEET EDGE CONNECTOR 6-32	1	
.....6	519-0601	PCB, MACH, EXGINE INPUT/OUTPUT	1	
.....5	919-0602	PCB, ASSY, FXI ETHERNET	1	
.....6	417-0189	CONN,9PIN MALE,RTANG,PCB MT	1	J2
.....6	417-0267	CONN,RJ-45,8 PIN,R.ANGLE MODULAR JACK,SHIELDED,LOW PROFILE	1	J1
.....6	417-1100	CONN, RJ11, FILTERED, PCB MOUNT	1	J4
.....6	417-1609	CONN, HDR, 16 PIN, R. ANGLE SHROUDED	1	J8
.....6	417-7188	CONN,RJ-45 JACK SINGLE PORT 8-PIN SHIELDED PCB MOUNT	1	J3

BOM LEVEL	PART NO.	DESCRIPTION	QTY	REF. DES.
.....6	420-4106	SCREW,4-40X.375,S.S. PH	2	
.....6	421-4001	4-40 S.S. HEX NUT	2	
.....6	421-6908	SHEET EDGE CONNECTOR 6-32	1	
.....6	423-4002	#4 LOCK S.S. SPLIT	2	
.....6	519-0602	PCB, MACH, FXI ETHERNET	1	
....2	979-0540	KIT, INSTALLATION, DTC DIGITAL EXCITER	1	
.....3	417-0291	CONN,PLUG,25-PIN,D",SOLDER CUPS"	1	
.....3	417-0910	KIT,BACKSHELL FOR 9-PIN D CONN	1	
.....3	417-2510	KIT,BACKSHELL FOR 25PIN D CONN	1	
.....3	417-3288	ADAPTER,BNC-JACK TO N-PLUG,50 OHM(N	1	
.....3	420-0007	SCREW,12-24 X 3/4,NATURAL SST,TRUSS HD, PHILLIPS DRIVE"	4	
.....3	420-0710	SCR,10-32 X 5/8,NATURAL SST,TRUSS HD,PHILLIPS DRIVE"	4	
.....3	421-0002	12-24 SPEED NUT (NOTE)	4	
.....3	550-111	CONNECTOR, D-SUB 9 PIN FEMALE	1	
.....3	682-0001	CORD LINE,3 COND,DETACH 7.5FT	1	
.....3	682-0003	CORD,PWR EUROPEAN RIGHT ANGLE, 6'	1	
.....3	701-0007	ANTISTATIC ZIPLOC BAG 12X12	1	
.....3	804-5002	NULL MODEM ADAPTOR DB9F TO DB9F	1	
.....3	829-4217	PLUG,MALE XLR, A3M (XLR-3-12C)	3	
.....3	849-0902	CBL ASSY,COMPUTER,DB9-DB9,M/F,6FT	1	
....2	979-0541	KIT, BINDER AND MANUAL, DTC DIGITAL EXCITER	1	
.....3	597-0541	INSTRUCTION MANUAL, FXI 60/250, FM DIGITAL EXCITER	1	
.....4	594-9999	PAPER,COPIER 8 1/2 X 11,20LB HI-TEC	0.001	
.....3	598-0008	BINDER,2 IN, BLUE W CD POCKET (NOTE)	1	
....2	979-6102	KIT,INSTALLATION,EXCITER WITH EXGINE	1	
.....3	701-0007	ANTISTATIC ZIPLOC BAG 12X12	1	
.....3	846-0020	CABLE,CAT5e,CROSSOVER,FTP,2 METER	1	
.....3	949-0600-101	ASSY,CABLE,FM AES/EBU TO STL,FXi (SBCM)	1	
.....4	608-1800	CBL,SHLD,AES/EBU,BELDEN 1800B (N)	10	
.....4	611-0061	TUB,HT SHK CLEAR 3/64	0.166	
.....4	829-4216	PLUG,FEM XLR, A3F (XLR-3-11C)	1	
.....4	829-4217	PLUG,MALE XLR, A3M (XLR-3-12C)	1	
.....3	949-0613	ASSY,CABLE,10MHz IN/OUT,FXi/EXGINE (SBCM)	1	
.....4	417-0094	CONN,BNC RG/U58 31-320 AMPH	2	
.....4	622-0050	CBL,SH,50 OHM,RG-58/CU	2	
..1	959-0509-313	ASSY, RF AMP MODULE, FM-10S/FMi	17	
....2	400-2191	GROMMET,1 ID,FOR .125 PANEL"	1	
....2	421-6908	SHEET EDGE CONNECTOR 6-32	1	
....2	422-6107	SCREW,SEMS 6-32 X 7/16 PAN PH.ST."	8	
....2	471-5216	COVER,AMP MODULE,SUMO	1	

BOM LEVEL	PART NO.	DESCRIPTION	QTY	REF. DES.
....2	959-0509-213	ASSY, RF MODULE LESS COVER, FM-10S/FMi	1	
.....3	959-0508	ASSY,RF MODULE COMBINER,FM-10S (SBCM)	1	
.....4	417-0384	CONN,N" TYPE,MALE TO PIN, NO NUT"	1	J1
.....4	417-1203	CONN,HEADER 12PIN R.ANGLE	1	P3
.....4	420-4106	SCREW,4-40X.375,S.S. PH	8	
.....4	421-4001	4-40 S.S. HEX NUT	8	
.....4	421-4008	4-40 KEP NUT	4	
.....4	421-6908	SHEET EDGE CONNECTOR 6-32	2	
.....4	441-0212	SPACER,MODULE COMBINER,FM-10S	8	
.....4	519-0509	PCB,MACH,MODULE SUPPORT,FM-10S	2	
.....4	519-0512	PCB,MACH,MODULE COMBINER BREAKAWAY,FM-10S	1	
.....4	919-0508	PCB,ASSY,MODULE COMBINER,FM-10S(SBCM)	1	
.....5	009-1032	CAP,CER CHIP,1000PF,100V,5%	5	C1, C4, C5, C6, C9
.....5	009-1813	CAP,CER CHIP,18 PF,5%,500V	1	C2
.....5	009-2413	CAP,CER CHIP,24PF,500V,5%	1	C8
.....5	101-1620	RES,CHIP,162 OHM,1/8W,1%,SMD	1	R2
.....5	101-1690	RES,CHIP,169 OHM,1/8W,1%SMD SIZE 1206	1	R13
.....5	102-1001	RES,CHIP,1.00K OHMS,1/10W,1%,SMD	1	R3
.....5	102-1063	RES,CHIP,100K OHMS,1/10W,5%,SMD	5	R1, R5, R6, R7, R9
.....5	102-1330	RES,CHIP,133 OHMS,1/8W,1%,SMD	2	R12, R14
.....5	102-5143	RES,5.1K OHMS,1/10W,1%,SMD	2	R8, R11
.....5	201-2801	DIODE,HOT CARRIER,MMBD701LT1,SMD	3	D1, D2, D3
.....5	366-0013	INDUCTOR,.12uH,CHIP,SMD	2	L1, L8
.....5	366-0014	INDUCTOR,0.82 uH,CHIP,SMD	1	L2
.....5	366-0015	INDUCTOR,1.00 uH,CHIP,SMD	1	L7
.....5	366-6152	FERRITE,CHIP IMPEDANCE 1500OHMS @ 100MHZ MULTILAYER, 0805	3	FL2, FL3, FL4
.....5	426-8010	STUD,PEM,KFH-440-4ET,PCB MOUNT	4	
.....5	519-0508	PCB,MACH,MOD. COMBINER COUPLER,FM-10S (NOTE)	1	
.....3	959-0509-113	ASSY, RF MODULE LESS COMBINER, FM-10S/FMi	1	
.....4	210-2932	TSTR, RF POWER, SD2932BW (note)	2	
.....4	330-2000	FUSE,20A 250V	2	F1, F2
.....4	420-2104	SCREW,2-56X.250,S.S. PH SC	4	
.....4	420-4106	SCREW,4-40X.375,S.S. PH	3	
.....4	420-4306	SCREW,4-40X.375,S.S. SHCS	4	
.....4	422-6106	SCREW,SEMS 6-32 X 3/8 PAN PH. ST."	17	
.....4	423-2002	#2 LOCK SPLIT	4	
.....4	423-4001	#4 FLAT SS .250 X .125 X .018	4	
.....4	423-4002	#4 LOCK S.S. SPLIT	7	
.....4	455-8008-1	ASSY, HEATSINK TREE AND GRASS	1	
.....5	420-0072	SCREW,10-32X3/4,PHL FLT SST	12	
.....5	455-8007	HEATSINK, TREE, SUMO	3	
.....5	455-8008	HEATSINK, GRASS, SUMO	1	
.....4	519-0507	PCB,MACH,MODULE SUB-BOARD,FM-10S	1	
.....4	919-0505-113	ASSY, PCB, RF AMP, S SERIES	2	
.....5	009-2723	CAP,CER CHIP,270PF,300V,5%	2	C102, C103

BOM LEVEL	PART NO.	DESCRIPTION	QTY	REF. DES.
.....5	009-4723	CAP,CER CHIP,470PF,200V,5%	4	C101, C104, C109, C110
.....5	090-5010	CAP,TRIM,MONO CERAMIC,6-50pF,50V	1	C116
.....5	220-0035	IC,LM35DZ CELSIUS TEMP SENSOR	1	U101
.....5	370-0062	ASSY,FM-10S,XFMR,RF AMP OUTPUT (SBCM)	1	T101
.....6	463-0126	TUBING,COPPER,1/8X.014X1.530	4	
.....6	610-2401	WIRE,TEFLON,18 AWG,600V,200C	0.8	
.....5	370-0063	ASSY,FM-10S,XFMR,RF AMP INPUT (SBCM)	1	
.....6	610-2401	WIRE,TEFLON,18 AWG,600V,200C	0.22	
.....5	370-0069	ASSY COIL,FM10S PA,L102 (SBCM)	1	L102
.....6	610-2401	WIRE,TEFLON,18 AWG,600V,200C	0.24	
.....5	463-0127	TUBING,COPPER,1/8X.014X1.300	1	
.....5	919-0505-013	SUB-ASSY, PCB, RF AMP, FM-10S/FMi (SBCM)	1	
.....6	009-1013-001	CAP,CER CHIP,10pF,500V,2%	3	C120, C121, C122
.....6	009-1032	CAP,CER CHIP,1000PF,100V,5%	3	C105, C106, C107
.....6	009-2023	CAP,CER CHIP,200PF,300V,5%	1	C119
.....6	009-6813-001	CAP,CER CHIP,68 pF, 2%,500V	1	C118
.....6	013-4784	CAP, LYTIC, 470 UF, 63V, RAD, 12.5MM DIA.	1	C124
.....6	046-1030	CAP,METAL FEED,1000PF,350V,10%	1	C117
.....6	101-2243	RES,CHIP,2.2K OHM,1/4W,5%	3	R105, R106, R107
.....6	102-1002	RES,CHIP,10.0K OHMS,1/10W,1%,SMD	1	R110
.....6	111-2223	RES,CHIP,22 OHM,1W,5%	6	R101, R102, R103, R104, R111, R112
.....6	198-0503	TRMR,50K,TOP ADJUST,SMD	1	R109
.....6	415-0022	CLIP,FUSE,3AG,SMD	1	XF1-2
.....6	417-0292	CONN,5 PIN,SMD	1	P1
.....6	417-0296	CONN,2 PIN,SMD	1	P2
.....6	519-0505-013	PCB, MACH, RF AMP, FM-10S/FMi	1	
.....4	919-0514-013	ASSY,PCB,RF AMP I/F,FM-10S/FMi (SBCM)	1	
.....5	006-1006	CAP,47 uF,Electrolytic,63V,SMD (NOTE)	1	C27
.....5	007-1022	CAP,CER,100pF,50V,2%,SMD	1	C4

BOM LEVEL	PART NO.	DESCRIPTION	QTY	REF. DES.
.....5	007-1044	CAP,CER,0.1uF,50V,10%,SMD note	11	C3, C5, C6, C7, C8, C9, C10, C12, C13, C14, C19
.....5	007-1044-200	CAP, CHIP, .1UF, 200V, 20%, SMD	5	C1, C2, C22, C20, C35
.....5	007-1054-001	CAP,CER,1UF,10%,10V,X7R,0805,SMD	1	C36
.....5	007-2012	CAP,CER,20pF,50V,2%,SMD	1	C11
.....5	007-2704-001	CAP, EMI FILTER, SMD	19	FL1, FL2, FL3, FL4, FL7, FL8, FL9, FL10, FL11, FL12, FL13, FL14, FL15, FL16, FL17, FL18, FL19, FL21, FL22
.....5	007-2704-002	CAP, EMI FILTER, SMD, 1000PF	1	FL20
.....5	009-1032	CAP,CER CHIP,1000PF,100V,5%	1	C31
.....5	009-4723	CAP,CER CHIP,470PF,200V,5%	3	C32, C33, C34
.....5	009-8013-001	CAP, CER CHIP, 82pF, 2%, 500V	2	C24, C30
.....5	046-1030	CAP,METAL FEED,1000PF,350V,10%	1	C28
.....5	070-1065	CAP,TANT,10UF,20V,10%,SMD	3	C15, C16, C17
.....5	090-0004	CAP,TRMR,CER,4-25PF,SMD,NPO	4	C23, C25, C26, C29
.....5	101-0003	RES,THICK FILM,0 OHM,1/8W,5%,SMD	4	R40, R41, R49
.....5	101-1822	RES,CHIP,18.2K OHM,1%,1/8W,1206,SMD	1	R46
.....5	102-1001	RES,CHIP,1.00K OHMS,1/10W,1%,SMD	6	R7, R8, R16, R31, R19, R24
.....5	102-1002	RES,CHIP,10.0K OHMS,1/10W,1%,SMD	14	R6, R9, R32, R10, R15, R35, R36, R37, R38, R25, R4, R42, R43, R47
.....5	102-1003	RES,CHIP,100K OHMS,1/10W,1%,SMD	5	R5, R17, R18, R44, R45
.....5	102-1004	RES,CHIP,1.00M OHMS,1/10W,1%,SMD	3	R29, R30, R3
.....5	102-1102	RES,CHIP,11.0K OHMS,1/10W,1%,SMD	1	R12
.....5	102-2212	RES,CHIP,22.1K OHMS,1/10W,1%,SMD	2	R21, R22
.....5	102-2261	RES,CHIP,2.26K OHM,1/10W,1%,SMD	1	R11
.....5	102-4021	RES,CHIP,4.02K OHMS,1/10W,1%,SMD	2	R14, R28
.....5	102-9094	RES,CHIP,9.09K OHM,1/10W,1%	1	R13
.....5	111-0005	.003 OHM 3W CURRENT SENSE RES, SMT	1	R23
.....5	131-5030	RES,50 OHM,250W,5%,FLANGE MOUNT	1	R34
.....5	132-5002	RES,50 OHM,20W,1%,TO-220 PKG	1	R33
.....5	198-0503	TRMR,50K,TOP ADJUST,SMD	2	R1, R2
.....5	198-1054	TRMR,10K OHMS,TOP ADJ,SMD (N)	1	R27
.....5	204-0914	DIODE,SWITCHING,MMBD914LT1,SMD	7	D1, D2, D3, D4, D5, D6, D9
.....5	210-1047	DIODE,ZENER,4.7V,225MW,SMD,SOT23	2	D7, D8
.....5	210-3310	P CHAN ENH MODE FET 60V SOT23	1	Q1
.....5	221-0184	SINGLE RAIL TO RAIL OP AMP, 4 MHZ BW	1	U6
.....5	221-0824	IC, OP AMP, AD 824, QUAD, RAIL TO RAIL	2	U3, U4
.....5	224-0351	IC,ANALOG SWITCH (NOTE)	1	U5
.....5	366-0017	IND, 17.5 NH, AIR, 16MM, 5%, SMD	2	L2, L3
.....5	366-6152	FERRITE,CHIP IMPEDANCE 1500OHMS @ 100MHZ MULTILAYER, 0805	4	FL5, FL6, FI23, FI24
.....5	413-1206	CHIP,TEST POINT,1206,SMD	1	TP1

BOM LEVEL	PART NO.	DESCRIPTION	QTY	REF. DES.
.....5	415-0022	CLIP,FUSE,3AG,SMD	2	XF1, XF2
.....5	417-0293	CONN,SOCKET STRIP,5 POS,SMD	2	J1A, J1B
.....5	417-0294	CONN,JACK,8 POS,DIP,BOT.ENTRY,SMD	1	J3
.....5	417-0297	CONN,SOCKET STRIP,2 POS,SMD	2	J2A, J2B
.....5	417-0308	CONN,JACK,3-PIN,SMD	2	J4A, J4B
.....5	417-0309	PLUG,JUMPER SHUNT,2-PIN	2	P4A, P4B
.....5	479-1375	SHIELD, 1.0 X 3.75" X .25""	1	
.....5	519-0514-013	PCB, MACH, RF AMP INT, FM-10S/FMi	1	
.....5	640-1001	WIRE, 10 GA, TIN PLATED	0.4	
..1	969-1010-010	KIT,ACCESSORY PARTS,FMi703	1	
....2	330-1000	FUSE,MDA 10A 250V SLO-BLO	2	
....2	330-2000	FUSE,20A 250V	4	
....2	402-0000	TY-RAP	12	
....2	420-0518	SCREW,10-32X.375,S.S. FLH UC	4	
....2	420-0710	SCR,10-32 X 5/8,NATURAL SST,TRUSS HD,PHILLIPS DRIVE"	8	
....2	421-6008	6-32 KEP NUT	4	
....2	421-6908	SHEET EDGE CONNECTOR 6-32	6	
....2	422-6107	SCREW,SEMS 6-32 X 7/16 PAN PH.ST."	4	
....2	471-5263	AIR DAM,MEDIUM,SUMO	2	
....2	682-0910	CORD, AC POWER, UNIVERSAL JUMPER	1	
....2	979-9974	KIT,BIN 〃,FM-5S/10S, FMi703	1	
.....3	597-1012	INSTRUCTION MANUAL, FM 10S/FMI 703 FM TRANSMITTER	1	
.....4	594-9999	PAPER,COPIER 8 1/2 X 11,20LB HI-TEC	0.001	
.....3	598-0008	BINDER,2 IN, BLUE W CD POCKET (NOTE)	1	
..1	979-0523	KIT, SOFTWARE, FM-10S SUPERVISOR CPU	1	
....2	544-7220	PCB ASSY,SMARTCORE WITH FLASH	1	

7 RF TECHNICAL SERVICES CONTACT INFORMATION

RF Technical Service -

Telephone: **(217) 224-9617**
E-Mail: **rfservice@bdcast.com**
Fax: **(217) 224-6528**
web**:** **www.bdcast.com**

8 DRAWINGS

The following pages provide assembly drawings, schematic diagrams, and additional information as indexed below for the FM-10S and FMi 703 Transmitter.

REVISIONS					
REV	DATE	DESCRIPTION	DRAFTER	APPROVED	ECN
A	3-17-99	PROTOTYPE RELEASE	B.G.		
B	8-25-99	(1).125 X .375 RECT CUTOUT, (45).250 DIA. & (2)"D" DELETED; (4)"B" & "J" CHANGED; "K" MOVED; (1)"A" & (45).250 DIA. ADDED & ENGINEERING RELEASE	B.G.		
C	10-15-00	"N" ADDED, (40).250 DIA. HOLES DELETED	B.G.		10375
D	12-24-02	471-5228-200 ADDED	B.G.		10861
E	6-21-05	(2)"D" & (1438).250 DIA. HOLES ADDED	B.G.		11310

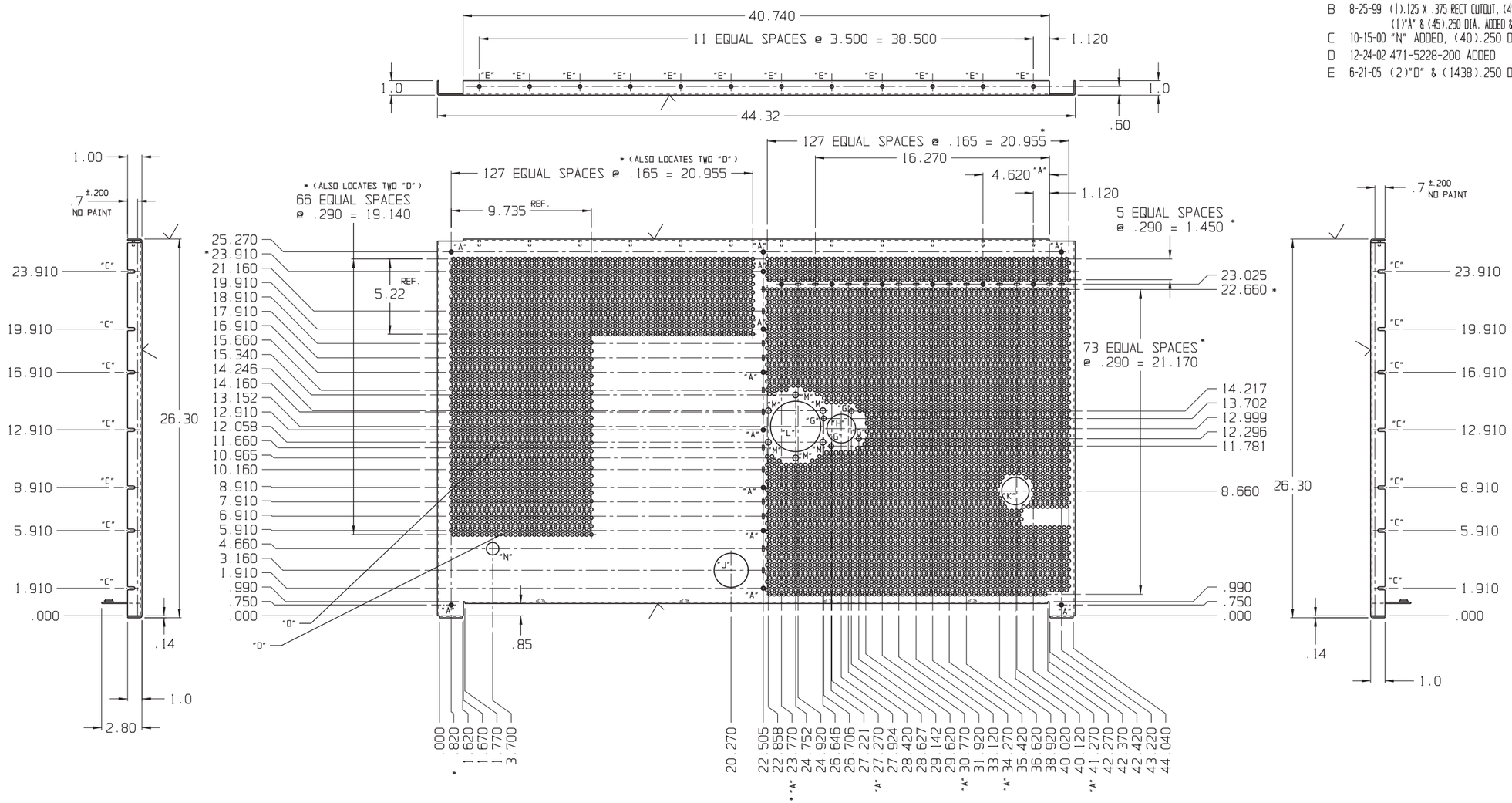

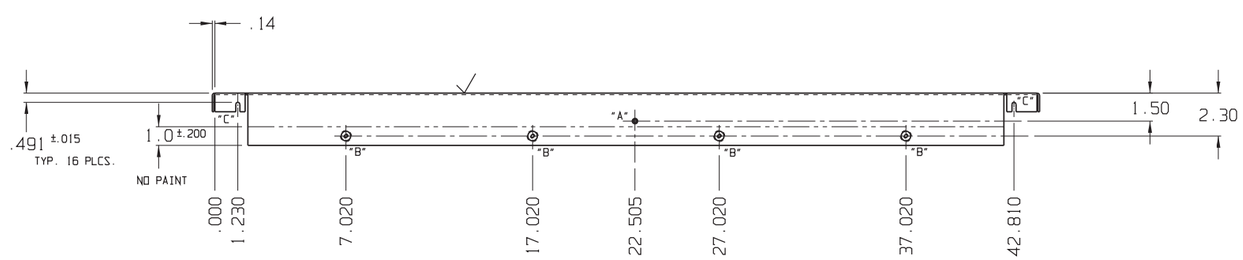

CODE	QTY	DESCRIPTION
N	1	.875 DIA. THRU
M	6	.406 DIA. THRU
L	1	3.5 DIA. THRU
REF	7398	.250 DIA. THRU * LOCATES .250 DIA. HOLES
K	1	1.906 ±.030 DIA. THRU
J	1	2.375 ±.030 DIA. THRU
H	1	2.0 DIA. THRU
G	4	.343 DIA. THRU
REF	24	.125 X .375 RECTANGULAR CUTOUT, AS SHOWN 12 HORIZONTAL & 12 VERTICAL
E	12	.189 +.003 -.000 DIA. THRU AND INSTALL "PEM" NO. FHS-032-8, OR EQUIVALENT, AS SHOWN
D	2	.169 DIA. THRU
C	16	.218 WIDE, OPEN END/ROUND END SLOT
B	4	.515 +.003 -.000 DIA. THRU AND INSTALL "PEM" NO. AC-0420-2, OR EQUIVALENT, AS SHOWN
A	19	.169 DIA. THRU AND CSK. 82° TO .289 ±.010 DIA., THIS SIDE, AS SHOWN

NOTES:

1. REMOVE ALL BURRS AND ROUGH EDGES.
2. MINIMUM RADIUS TYPICAL ALL FOLDS.
3. FINISH: PART 471-5228 (FM10S/FM20S) TO BE PAINTED BE-406 (TECHNICAL GRAY) MEDIUM TEXTURE, TO SURFACES MARKED ✓. MIN. OVERSPRAY. NOTE MASKING IN THREE PLACES.

   PART 471-5228-200 (FMi 703/FMi 1405) TO BE PAINTED MARTI GREY (F63TXA2490-7309 POLANE T POLYURETHANE ENAMEL) MEDIUM TEXTURE, TO SURFACES MARKED ✓. MIN. OVERSPRAY. NOTE MASKING IN THREE PLACES.

TOLERANCE (DECIMAL) U.O.S.
.x ± .030 .xxx ± .005
.xx ± .015 ANGLES ± 1°

DWN. BY B.G. 3-13-99
DESIGNER(S)
PROJ. LEADER
MFG.

MATERIAL B.E.#464-0047 .090" THK. ALUM. SHT. 5052-H34
FINISH SEE NOTE #3
SEE DWG RA592-0000
NEXT ASSY.

BROADCAST ELECTRONICS INC.
4100 N.24TH ST.,P.O.BOX 3606 QUINCY,IL 62305 217/224-9600
TELEX 250142 CABLE BROADCAST FAX 217/224-9607

TITLE TOP, EXTERNAL SUMO

TYPE	SIZE	DWG. NO.	REV
M	D	471-5228-200 471-5228	E

MODEL FM10S SCALE 1/4 SHEET 1 OF 1

REVISIONS					
REV	DATE	DESCRIPTION	DRAFTER	APPROVED	ECN
A	3-29-99	PROTOTYPE RELEASE	B.G.		
B	7-21-99	WIDTH & (11)"C" CHANGED & ENGINEERING RELEASE	B.G.		
C	12-20-02	471-5242-200 ADDED	B.G.		10861
D	6-21-05	(1522).250 DIA. HOLES ADDED	B.G.		11310

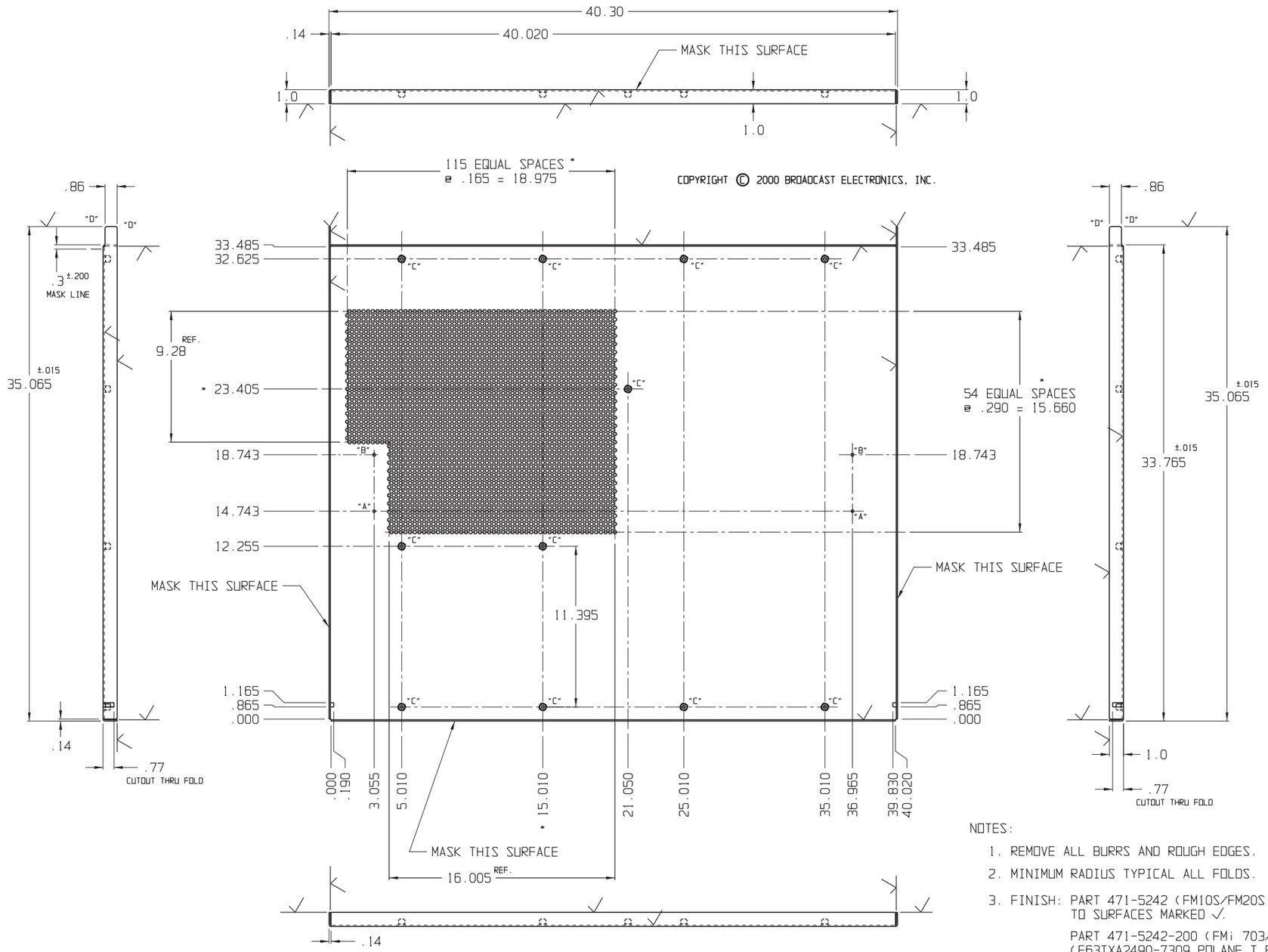

NOTES:

1. REMOVE ALL BURRS AND ROUGH EDGES.
2. MINIMUM RADIUS TYPICAL ALL FOLDS.
3. FINISH: PART 471-5242 (FM10S/FM20S) TO BE PAINTED BE-406 (TECHNICAL GRAY) MEDIUM TEXTURE, TO SURFACES MARKED ✓.

   PART 471-5242-200 (FMi 703/FMi 1405) TO BE PAINTED MARTI GREY (F63TXA2490-7309 POLANE T POLYURETHANE ENAMEL) MEDIUM TEXTURE, TO SURFACES MARKED ✓.

CODE	QTY	DESCRIPTION
C	11	.437 DIA. THRU AND CSK. 82° TO .550 ±.010 DIA., OPPOSITE SIDE, THEN LOCATE "STAND-OFF" (INCLUDED WITH SOUTHCO 51-11-409-26) AS SHOWN AND FLARE "STAND-OFF" INTO COUNTERSINK. BACK-UP TOOL MUST BE USED. THE "SCREWS" INCLUDED WITH 51-11-409-26 TO BE PLACED IN A BAG AND ATTACHED TO THIS PART.
B	2	.187 X .215 ROUND END SLOT, VERTICAL
A	2	.189 DIA. THRU
D	4	.125 ±.015 RADIUS, AS SHOWN

REF	2992	.250 DIA. THRU * LOCATES .250 DIA. HOLES

TOLERANCE (DECIMAL) U.O.S.
.x ± .030 .xxx ± .005
.xx ± .015 ANGLES ± 1°

DWN. BY B.G. 3-26-99
DESIGNER(S)
PROJ. LEADER
MFG.

MATERIAL B.E.#464-0047 .090" THK. ALUM. SHT. 5052-H34
FINISH SEE NOTE #3
SEE DWG RA592-0000
NEXT ASSY.

BROADCAST ELECTRONICS INC.
4100 N.24TH ST.,P.O.BOX 3606 QUINCY,IL 62305 217/224-9600
TELEX 250142 CABLE BROADCAST FAX 217/224-9607

TITLE DOOR, REAR UPPER SUMO

TYPE	SIZE	DWG. NO.	REV
M	D	471-5242-200 / 471-5242	D

MODEL FM10S SCALE 1/4 SHEET 1 OF 1

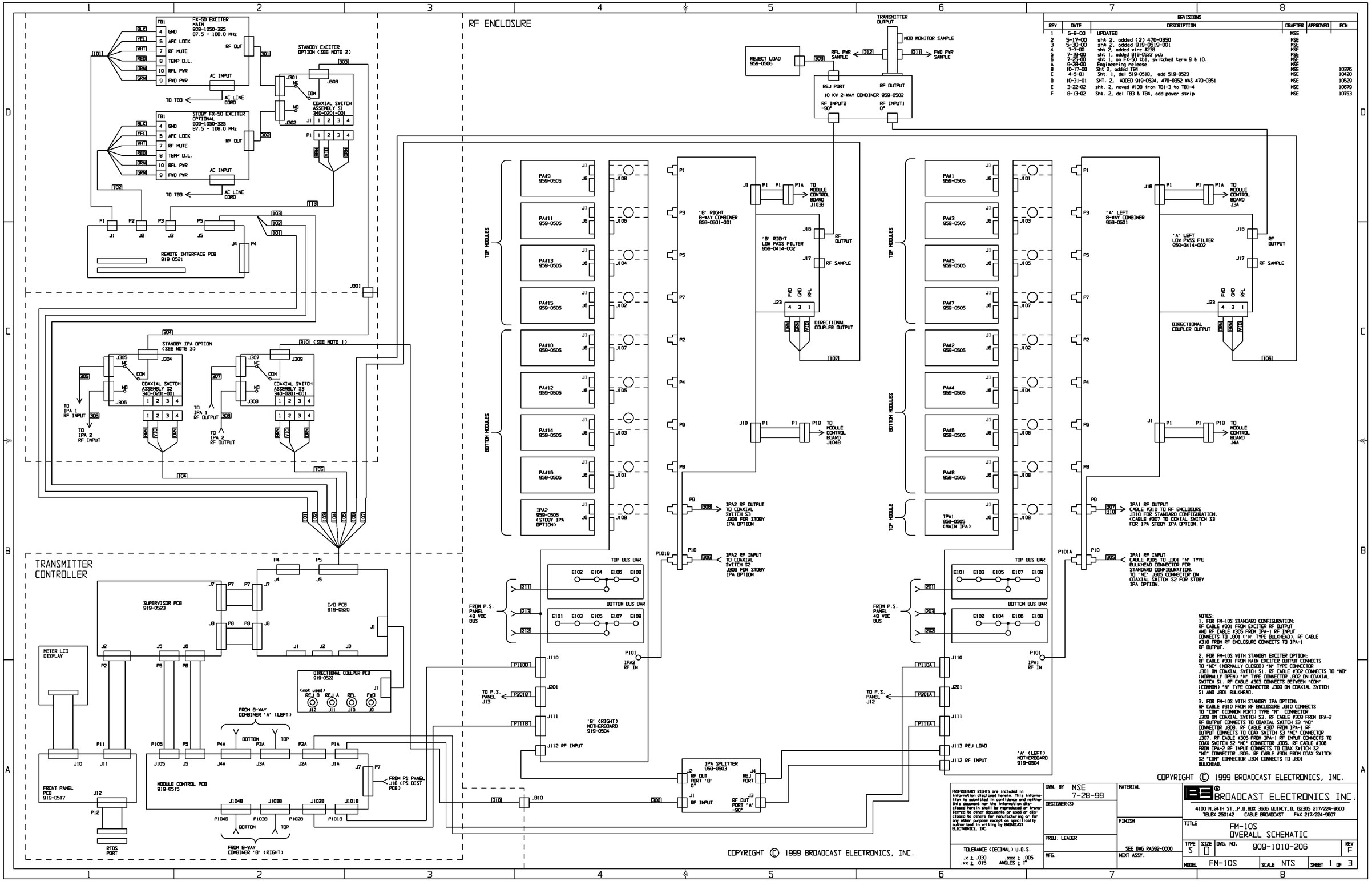

REVISIONS					
REV	DATE	DESCRIPTION	DRAFTER	APPROVED	ECN
1	5-8-00	UPDATED	MSE		
2	5-17-00	sht 2, added (2) 470-0350	MSE		
3	5-30-00	sht 2, added 919-0519-001	MSE		
4	7-7-00	sht 2, added wire #238	MSE		
5	7-19-00	sht 1, added 919-0522 pcb	MSE		
6	7-25-00	sht 1, on FX-50 tb1, switched term 9 & 10.	MSE		
A	9-28-00	Engineering release	MSE		
B	10-17-00	Sht 2, added TB4	MSE		10376
C	4-5-01	Sht. 1, del 519-0518, add 519-0523	MSE		10420
D	10-31-01	SHT. 2, ADDED 919-0524, 470-0352 WAS 470-0351	MSE		10529
E	3-22-02	sht. 2, moved #138 from TB1-3 to TB1-4	MSE		10679
F	8-13-02	Sht. 2, del TB3 & TB4, add power strip	MSE		10753

REVISIONS					
REV	DATE	DESCRIPTION	DRAFTER	APPROVED	ECN
1	5-8-00	Updated	MSE		
2	5-17-00	Added (2) 470-0351	MSE		
3	5-30-00	Added 919-0519-001	MSE		
4	7-7-00	Added wire #238	MSE		
A	9-28-00	Engineering release	MSE		
B	10-17-00	Added TB4	MSE		10376
D	10-31-01	added 919-0524, 470-0352 was 470-0351	MSE		10529
E	3-22-02	moved #138 from TB1-3 to TB1-4	MSE		10679
F	8-13-02	removed TB3 & TB4, added power strip	MSE		10753

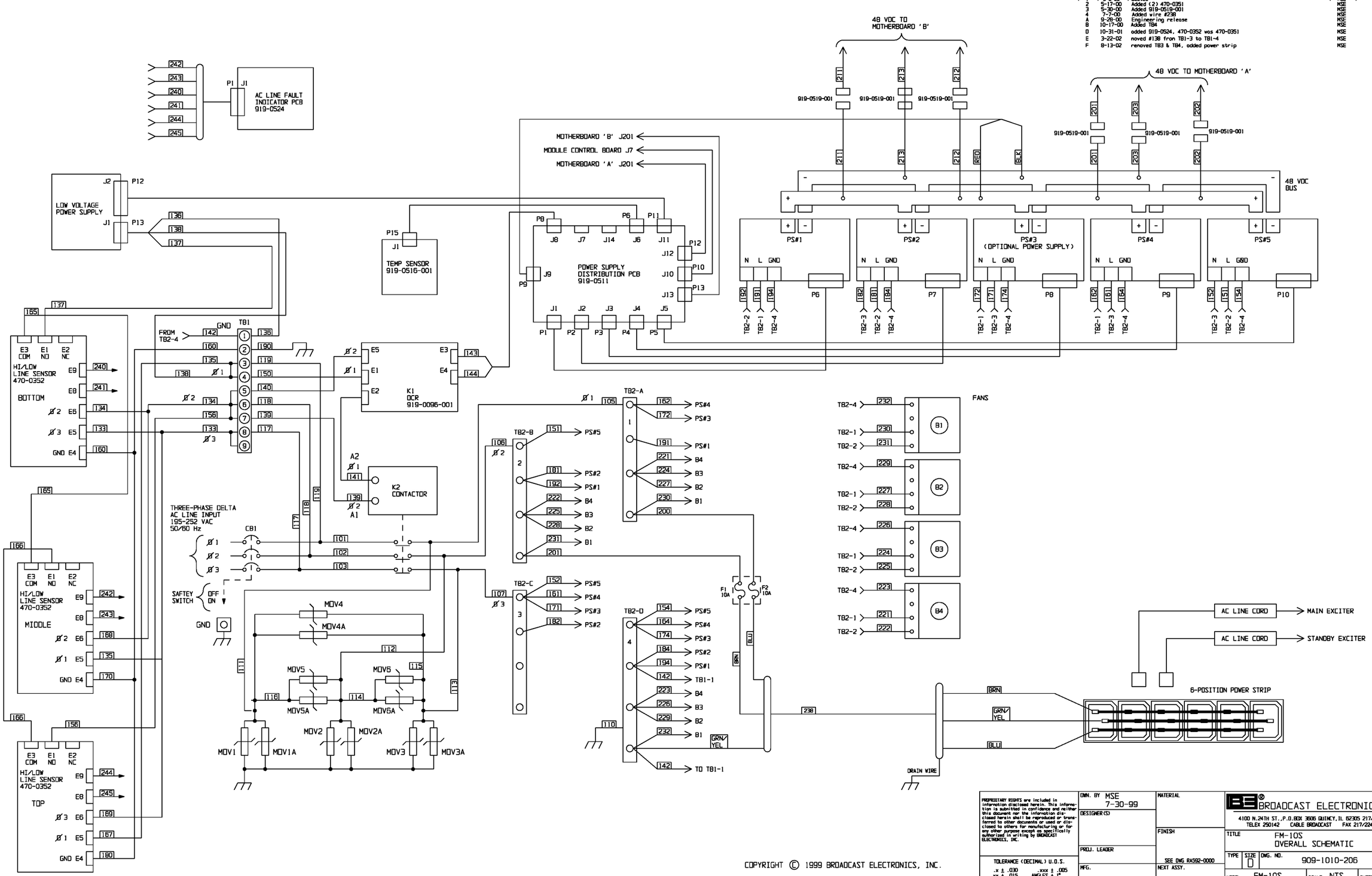

TOLERANCE (DECIMAL) U.O.S.
.X ± .030 .XXX ± .005
.XX ± .015 ANGLES ± 1°

DWN. BY MSE 7-30-99
DESIGNER(S)
PROJ. LEADER
MFG.

MATERIAL
FINISH
SEE DWG RA592-0000
NEXT ASSY.

BROADCAST ELECTRONICS INC.
4100 N.24TH ST.,P.O.BOX 3606 QUINCY,IL 62305 217/224-9600
TELEX 250142 CABLE BROADCAST FAX 217/224-9607

TITLE FM-10S OVERALL SCHEMATIC

TYPE	SIZE	DWG. NO.	REV
	D	909-1010-206	F

MODEL FM-10S SCALE NTS SHEET 2 OF 3

REVISIONS					
REV	DATE	DESCRIPTION	DRAFTER	APPROVED	ECN
A	9-28-00	Engineering release			

MOTHERBOARD J107 <-> RF MODULE J6

1 GND
2 RF IN
3 RF IN
4 GND
5 GND
6 +5V
7 -12V
8 LOGIC GND
9 LOGIC GND
10 GND
11 GND
12 GND
13 SELECT MOD 7
14 GND
15 VDC E107
16 VDC E107
17 VDC E107
18 PRESENCE MOD 7B
19 PRESENCE MOD 7A
20 GND
21 GND
22 GND
23 +12V
24 RESET
25 BIAS CTL MOD 7
26 FWD PWR
27 RFL PWR
28 TEMP
29 MOD CURRENT
30 SPARE
31 GND
32 GND
33 VDC E107
34 VDC E107
35 VDC E107
36 GND

MOTHERBOARD J109 <-> RF MODULE J6

1 GND
2 RF IN
3 RF IN
4 GND
5 GND
6 +5V
7 -12V
8 LOGIC GND
9 LOGIC GND
10 GND
11 GND
12 GND
13 SELECT MOD 9
14 GND
15 VDC E109
16 VDC E109
17 VDC E109
18 PRESENCE MOD 9B
19 PRESENCE MOD 9A
20 GND
21 GND
22 GND
23 +12V
24 RESET
25 BIAS CTL MOD 9
26 FWD PWR
27 RFL PWR
28 TEMP
29 MOD CURRENT
30 SPARE
31 GND
32 GND
33 VDC E109
34 VDC E109
35 VDC E109
36 GND

MOTHERBOARD J101 <-> RF MODULE J6

1 GND
2 RF IN
3 RF IN
4 GND
5 GND
6 +5V
7 -12V
8 LOGIC GND
9 LOGIC GND
10 GND
11 GND
12 GND
13 SELECT MOD 1
14 GND
15 VDC E101
16 VDC E101
17 VDC E101
18 PRESENCE MOD 1B
19 PRESENCE MOD 1A
20 GND
21 GND
22 GND
23 +12V
24 RESET
25 BIAS CTL MOD 1
26 FWD PWR
27 RFL PWR
28 TEMP
29 MOD CURRENT
30 SPARE
31 GND
32 GND
33 VDC E101
34 VDC E101
35 VDC E101
36 GND

MOTHERBOARD J103 <-> RF MODULE J6

1 GND
2 RF IN
3 RF IN
4 GND
5 GND
6 +5V
7 -12V
8 LOGIC GND
9 LOGIC GND
10 GND
11 GND
12 GND
13 SELECT MOD 3
14 GND
15 VDC E103
16 VDC E103
17 VDC E103
18 PRESENCE MOD 3B
19 PRESENCE MOD 3A
20 GND
21 GND
22 GND
23 +12V
24 RESET
25 BIAS CTL MOD 3
26 FWD PWR
27 RFL PWR
28 TEMP
29 MOD CURRENT
30 SPARE
31 GND
32 GND
33 VDC E103
34 VDC E103
35 VDC E103
36 GND

MOTHERBOARD J105 <-> RF MODULE J6

1 GND
2 RF IN
3 RF IN
4 GND
5 GND
6 +5V
7 -12V
8 LOGIC GND
9 LOGIC GND
10 GND
11 GND
12 GND
13 SELECT MOD 5
14 GND
15 VDC E105
16 VDC E105
17 VDC E105
18 PRESENCE MOD 5B
19 PRESENCE MOD 5A
20 GND
21 GND
22 GND
23 +12V
24 RESET
25 BIAS CTL MOD 5
26 FWD PWR
27 RFL PWR
28 TEMP
29 MOD CURRENT
30 SPARE
31 GND
32 GND
33 VDC E105
34 VDC E105
35 VDC E105
36 GND

MOTHERBOARD J102 <-> RF MODULE J6

1 GND
2 RF IN
3 RF IN
4 GND
5 GND
6 +5V
7 -12V
8 LOGIC GND
9 LOGIC GND
10 GND
11 GND
12 GND
13 SELECT MOD 2
14 GND
15 VDC E102
16 VDC E102
17 VDC E102
18 PRESENCE MOD 2B
19 PRESENCE MOD 2A
20 GND
21 GND
22 GND
23 +12V
24 RESET
25 BIAS CTL MOD 2
26 FWD PWR
27 RFL PWR
28 TEMP
29 MOD CURRENT
30 SPARE
31 GND
32 GND
33 VDC E102
34 VDC E102
35 VDC E102
36 GND

MOTHERBOARD J104 <-> RF MODULE J6

1 GND
2 RF IN
3 RF IN
4 GND
5 GND
6 +5V
7 -12V
8 LOGIC GND
9 LOGIC GND
10 GND
11 GND
12 GND
13 SELECT MOD 4
14 GND
15 VDC E104
16 VDC E104
17 VDC E104
18 PRESENCE MOD 4B
19 PRESENCE MOD 4A
20 GND
21 GND
22 GND
23 +12V
24 RESET
25 BIAS CTL MOD 4
26 FWD PWR
27 RFL PWR
28 TEMP
29 MOD CURRENT
30 SPARE
31 GND
32 GND
33 VDC E104
34 VDC E104
35 VDC E104
36 GND

MOTHERBOARD J106 <-> RF MODULE J6

1 GND
2 RF IN
3 RF IN
4 GND
5 GND
6 +5V
7 -12V
8 LOGIC GND
9 LOGIC GND
10 GND
11 GND
12 GND
13 SELECT MOD 6
14 GND
15 VDC E106
16 VDC E106
17 VDC E106
18 PRESENCE MOD 6B
19 PRESENCE MOD 6A
20 GND
21 GND
22 GND
23 +12V
24 RESET
25 BIAS CTL MOD 6
26 FWD PWR
27 RFL PWR
28 TEMP
29 MOD CURRENT
30 SPARE
31 GND
32 GND
33 VDC E106
34 VDC E106
35 VDC E106
36 GND

MOTHERBOARD J108 <-> RF MODULE J6

1 GND
2 RF IN
3 RF IN
4 GND
5 GND
6 +5V
7 -12V
8 LOGIC GND
9 LOGIC GND
10 GND
11 GND
12 GN8
13 SELECT MOD 8
14 GND
15 VDC E108
16 VDC E108
17 VDC E108
18 PRESENCE MOD 8B
19 PRESENCE MOD 8A
20 GND
21 GND
22 GND
23 +12V
24 RESET
25 BIAS CTL MOD 8
26 FWD PWR
27 RFL PWR
28 TEMP
29 MOD CURRENT
30 SPARE
31 GND
32 GND
33 VDC E108
34 VDC E108
35 VDC E108
36 GND

MOTHERBOARD J110 <-> CONTROLLER P1A

1 SELECT MOD 9
2 LOGIC GND
3 LOGIC GND
4 RESET
5 LOGIC GND
6 BIAS CTL MOD 7
7 SELECT MOD 7
8 BIAS CTL MOD 5
9 SELECT MOD 5
10 PRESENCE MOD 3A
11 PRESENCE MOD 3B
12 SELECT MOD 3
13 PRESENCE MOD 1A
14 BIAS CTL MOD 1
15 SELECT MOD 1
16 BIAS CTL MOD 3
17 PRESENCE MOD 1B
18 PRESENCE MOD 5B
19 PRESENCE MOD 5A
20 PRESENCE MOD 7B
21 PRESENCE MOD 7A
22 N/C
23 N/C
24 BIAS CTL MOD 9
25 LOGIC GND

MOTHERBOARD J111 <-> CONTROLLER P2A

1 PRESENCE MOD 6A
2 BIAS CTL MOD 6
3 PRESENCE MOD 6B
4 SELECT MOD 6
5 PRESENCE MOD 8A
6 BIAS CTL MOD 8
7 PRESENCE MOD 8B
8 SELECT MOD 8
9 TEMP SAMPLE X10
10 FWD PWR
11 TEMP
12 SPARE
13 N/C
14 PRESENCE MOD 9B
15 MOD CURRENT
16 RFL PWR
17 PRESENCE MOD 9A
18 PRESENCE MOD 4A
19 BIAS CTL MOD 4
20 PRESENCE MOD 4B
21 SELECT MOD 4
22 PRESENCE MOD 2A
23 BIAS CTL MOD 2
24 PRESENCE MOD 2B
25 SELECT MOD 2

P.S DIST PCB J10 <-> CONTROLLER J7

1 VC+
2 VC GND
3 FAULT 1
4 LOGIC GND
5 INHIBIT
6 FAULT 2
7 FAULT 3
8 FAULT 4
9 FAULT 5
10 TEMP SAMPLE
11 H/L AC LINE SENSOR
12 OCR CONTROL
13 +24V
14 +48V SAMPLE
15 +5V
16 +5V
17 +5V
18 GND
19 GND
20 GND
21 GND
22 -12V
23 -12V
24 +12V
25 +12V

P.S DIST PCB J12/J13 <-> MOTHEBOARD A & B J201/J115

1 +12V
2 +12V
3 +12V
4 N/C
5 N/C
6 -12V
7 -12V
8 -12V
9 +15V
10 CHASSIS GND

TOLERANCE (DECIMAL) U.O.S.
.x ± .030 .xxx ± .005
.xx ± .015 ANGLES ± 1°

DWN. BY MSE 8-10-99
DESIGNER(S)
PROJ. LEADER
MFG.
MATERIAL
FINISH
SEE DWG RA592-0000
NEXT ASSY.

BROADCAST ELECTRONICS INC.
4100 N.24TH ST.,P.O.BOX 3606 QUINCY,IL 62305 217/224-9600
TELEX 250142 CABLE BROADCAST FAX 217/224-9607

TITLE FM-10S OVERALL SCHEMATIC

TYPE	SIZE	DWG. NO.	REV
S	D	909-1010-206	F

MODEL FM10S SCALE NTS SHEET 3 OF 3

FM–10S OVERALL SCHEMATIC SHT. 4 OF 7 (PAGE 1)			CONTROLLER I/O BOARD AND WIRE HARNESS				37–PIN SUB–D CONNECTOR PIN–OUTS				
37–PIN			25–PIN			MAIN	STAND-BY	EXC	IPA IN	IPA OUT	LOW
CON-TROL-LER	WIRE	CIRCUIT FUNCTION	CON-TROL-LER	CON-TROL-LER	WIRE	FX–50	FX–50	RELAY	RELAY	RELAY	PASS
I/O BOARD	HARNESS		RMTE I/F BD	RMTE I/F BD	HAR-NESS	EXCIT-ER	EXCIT-ER	S1	S2	S3	FILTER
J5 ——— P5	WIRE NO.		J5 ——— P5		WIRE NO.	TB1	TB1	J1 ——— P1	J1 ——— P1	J1 ——— P1	J23
1	102–WHT	STBY EXC RF MUTE	12	J2–3	P2/112–WHT		7				
2	102–YEL	STBY EXC AFC LOCK	13	J2–4	P2/112–YEL		5				
3	104–RED	IPA IN RELAY CONTROL							2		
4	105–RED	IPA OUT RELAY CONTROL								2	
5	103–RED	EXC OUT RELAY CON-TROL	20	J3–2	P3/113–RED			2			
6	103 GRN	EXC RELAY TALLY	21	J3–3	P3/113–GRN			4			
7	104–GRN	IPA IN RELAY TALLY							4		
8	JUMPER	INTERLOCK RETURN									
9	101–RED	MAIN EXC OVER TEMP	5	J1–5	P1/111–RED	8					
10	101–YEL	MAIN EXC AFC LOCK	4	J1–4	P1/111–YEL	5					
11	105–GRN	IPA OUT RELAY TALLY								4	
12	101–BLU	NOT USED	7	J1–7	P1/111–BLU						
13	102–BLU	NOT USED	16	J2–7	P2/112–BLU						
14	101–GRN	MAIN EXC FWD PWR	1	J1–4	P1/111–GRN	9					
15	101–ORN	MAIN EXC RFL PWR	2	J1–2	P1/111–ORN	10					
16	101–WHT	MAIN EXC RF MUTE	3	J1–3	P1/111–WHT	7					
17	106–GRN	FILTER A (1) FWD PWR									4
18	106–RED	FILTER A (1) RFL PWR									1
19	107–GRN	FILTER B (2) FWD PWR									4
20	107–RED	FILTER B (2) RFL PWR									1
21											
22											
23											
24											
25	JUMPER	INTERLOCK OUT									
26	104–BLK	+24V' TO IPA IN RELAY							1		

27	105–BLK	+24V' TO IPA OUT RELAY								1	
28	103–BLK	+24V' TO EXC RELAY	19	J3–1	P3/113–BLK			1			
29	102–GRN	STBY EXC FWD PWR	10	J2–1	P2/112–GRN		9				
30	102–ORN	STBY EXC RFL PWR	11	J2–2	P2/112–ORN		10				
31	102–RED	STBY EXC OVER TEMP	14	J2–5	P2/111–RED		8				
32	101–BLK	GND TO MAIN EXC	6	J1–6	P1/111–BLK	4					
33	102–BLK	GND TO STBY EXC	15	J2–6	P2/112–BLK		4				
34	106–BLK	FILTER A (1) GND RETURN									3
35	107–BLK	FILTER B (2) GND RETURN									3
36											
37											

FM–10S/FMi–703 OVERALL SCHEMATIC SHT. 5 OF 7 (PAGE 1 OF 3)				
MOTHERBOARD AND CONTROLLER MODULE CONTROL BOARD				
25–PIN SUB–D CONNECTOR PIN–OUTS				
		DATA	CONTROLLER	CONTROLLER
MOTHERBOARD CONNECTORS		CABLE	CHASSIS	MODULE CONTROL BD
J110	MOTHERBD ”A” LEFT	P110A/P1A	J1A	J1
J110	MOTHERBD ”B” RIGHT	P110B/P101B	J101B	J101
1	SELECT MODULE 9	1	1	1
2	LOGIC GND	2	2	2
3	LOGIC GND	3	3	3
4	RESET	4	4	4
5	LOGIC GND	5	5	5
6	BIAS CONTROL MODULE 7	6	6	6
7	SELECT MODULE 7	7	7	7
8	BIAS CONTROL MODULE 5	8	8	8
9	SELECT MODULE 5	9	9	9
10	PRESENCE MODULE 3A	10	10	10
11	PRESENCE MODULE 3B	11	11	11
12	SELECT MODULE 3	12	12	12
13	PRESENCE MODULE 1A	13	13	13
14	BIAS CONTROL MODULE 1	14	14	14
15	SELECT MODULE 1	15	15	15
16	BIAS CONTROL MODULE 3	16	16	16
17	PRESENCE MODULE 1B	17	17	17
18	PRESENCE MODULE 5B	18	18	18
19	PRESENCE MODULE 5A	19	19	19
20	PRESENCE MODULE 7B	20	20	20
21	PRESENCE MODULE 7A	21	21	21
22	N/C	22	22	22
23	N/C	23	23	23
24	BIAS CONTROL MODULE 9	24	24	24
25	LOGIC GND	25	25	25

FM–10S/FMi–703 OVERALL SCHEMATIC SHT. 5 OF 7 (PAGE 2 OF 3)				
MOTHERBOARD AND CONTROLLER MODULE CONTROL BOARD				
25–PIN SUB–D CONNECTOR PIN–OUTS CONTD_				
		DATA	CONTROLLER	CONTROLLER
MOTHERBOARD CONNECTORS		CABLE	CHASSIS	MODULE CONTROL BD
J111	MOTHERBD ”A” LEFT	P111A/P2A	J2A	J2
J111	MOTHERBD ”B” RIGHT	P111B/P102B	J102B	J102
1	PRESENCE MODULE 6A	1	1	1
2	BIAS CONTROL MODULE 6	2	2	2
3	PRESENCE MODULE 6B	3	3	3
4	SELECT MODULE 6	4	4	4
5	PRESENCE MODULE 8A	5	5	5
6	BIAS CONTROL MODULE 8	6	6	6
7	PRESENCE MODULE 8B	7	7	7
8	SELECT MODULE 8	8	8	8
9	TEMP SAMPLE X 5 (IPA REJ LOAD)	9	9	9
10	MODULE FORWARD POWER	10	10	10
11	MODULE TEMPERATURE	11	11	11
12	SPARE	12	12	12
13	N/C	13	13	13
14	PRESENCE MODULE 9B	14	14	14
15	MODULE CURRENT	15	15	15
16	MODULE REFLECTED POWER	16	16	16
17	PRESENCE MODULE 9A	17	17	17
18	PRESENCE MODULE 4A	18	18	18
19	BIAS CONTROL MODULE 4	19	19	19
20	PRESENCE MODULE 4B	20	20	20
21	SELECT MODULE 4	21	21	21
22	PRESENCE MODULE 2A	22	22	22
23	BIAS CONTROL MODULE 2	23	23	23
24	PRESENCE MODULE 2B	24	24	24
25	SELECT MODULE 2	25	25	25

FM–10S/FMi–703 OVERALL SCHEMATIC SHT. 5 OF 7 (PAGE 3 OF 3)			
MOTHERBOARD AND IPA SPLITER REJECT LOAD TEMPERATURE SENSOR BOARD			
4–PIN CONNECTOR PIN–OUTS			
MOTHERBOARD ”A”			TEMP SENSOR BOARD
CONNECTOR	WIRE HARNESS	CIRCUIT FUNCTION	(IPA REJECT LOAD)
J114	P114/P1		J1
1	RED	+12V	1
2	N/C	TEMP SAMPLE (.01V/DEG.C)	2
3	BLACK	TEMP SAMPLE X 5	3
4	SHIELD	GND	4

FM–10S/FMi–703 OVERALL SCHEMATIC SHT. 6 OF 7 (PAGE 1 OF 2)						
8–WAY COMBINER ”A” LEFT						
9–PIN SUB–D CONNECTOR PINOUTS						
TOP COMBINER INPUT CONTROL BOARD		RIBBON	DATA	CONTROL-LER		
9–PIN SUB–D CONNECTOR		CABLE	CABLE	CHASSIS	CONTROL-LER MOD-ULE CON-TROL BD	
J1B	8–WAY COMBINER ”A”	P1	P1AT/P3A	J3A	J3	9–PIN SUB–D CONNECTOR
1	RELAY K4 PIN 2 COIL (–) RETURN	1	1	1	1	MODULE 1 FAULT – GROUND
2	RELAY K3 PIN 2 COIL (–) RETURN	2	2	2	2	MODULE 3 FAULT – GROUND
3	RELAYS K1 THRU K4 PIN 1 COIL (+)	3	3	3	3	DC +12V TO RELAY COILS
4	RELAY K2 PIN 2 COIL (–) RETURN	4	4	4	4	MODULE 5 FAULT – GROUND
5	RELAY K1 PIN 2 COIL (–) RETURN	5	5	5	5	MODULE 7 FAULT – GROUND
6	LOGIC GROUND	6	6	6	6	LOGIC GROUND
7	LOGIC GROUND	7	7	7	7	LOGIC GROUND
8	LOGIC GROUND	8	8	8	8	LOGIC GROUND
9	LOGIC GROUND	9	9	9	9	LOGIC GROUND
BOTTOM COMBINER INPUT CONTROL BOARD		RIBBON	DATA	CONTROL-LER		
9–PIN SUB–D CONNECTOR		CABLE	CABLE	CHASSIS	CONTROL-LER MOD-ULE CON-TROL BD	
J1	8–WAY COMBINER ”A”	P1	P1AB/P4A	J4A	J4	9–PIN SUB–D CONNECTOR
1	RELAY K4 PIN 2 COIL (–) RETURN	1	1	1	1	MODULE 2 FAULT – GROUND
2	RELAY K3 PIN 2 COIL (–) RETURN	2	2	2	2	MODULE 4 FAULT – GROUND
3	RELAYS K1 THRU K4 PIN 1 COIL (+)	3	3	3	3	DC +12V TO RELAY COILS
4	RELAY K2 PIN 2 COIL (–) RETURN	4	4	4	4	MODULE 6 FAULT – GROUND
5	RELAY K1 PIN 2 COIL (–) RETURN	5	5	5	5	MODULE 8 FAULT – GROUND
6	LOGIC GROUND	6	6	6	6	LOGIC GROUND
7	LOGIC GROUND	7	7	7	7	LOGIC GROUND
8	LOGIC GROUND	8	8	8	8	LOGIC GROUND
9	LOGIC GROUND	9	9	9	9	LOGIC GROUND

FM–10S/FMi–703 OVERALL SCHEMATIC SHT. 6 OF 7 (PAGE 2 OF 2)						
8–WAY COMBINER ”B” RIGHT						
9–PIN SUB–D CONNECTOR PINOUTS						
TOP COMBINER INPUT CONTROL BOARD		RIBBON	DATA	CONTROL-LER		
9–PIN SUB–D CONNECTOR		CABLE	CABLE	CHASSIS	CONTROL-LER MOD-ULE CON-TROL BD	
J1	8–WAY COMBINER ”B”	P1	P1BT/ P103B	J103B	J103	9–PIN SUB–D CONNECTOR
1	RELAY K4 PIN 2 COIL (–) RETURN	1	1	1	1	MODULE 15 FAULT – GROUND
2	RELAY K3 PIN 2 COIL (–) RETURN	2	2	2	2	MODULE 13 FAULT – GROUND
3	RELAYS K1 THRU K4 PIN 1 COIL (+)	3	3	3	3	DC +12V TO RELAY COILS
4	RELAY K2 PIN 2 COIL (–) RETURN	4	4	4	4	MODULE 11 FAULT – GROUND
5	RELAY K1 PIN 2 COIL (–) RETURN	5	5	5	5	MODULE 9 FAULT – GROUND
6	LOGIC GROUND	6	6	6	6	LOGIC GROUND
7	LOGIC GROUND	7	7	7	7	LOGIC GROUND
8	LOGIC GROUND	8	8	8	8	LOGIC GROUND
9	LOGIC GROUND	9	9	9	9	LOGIC GROUND
BOTTOM COMBINER INPUT CONTROL BOARD		RIBBON	DATA	CONTROL-LER		
9–PIN SUB–D CONNECTOR		CABLE	CABLE	CHASSIS	CONTROL-LER MOD-ULE CON-TROL BD	
J1B	8–WAY COMBINER ”B”	P1	P1BB/P104 B	J104B	J104	9–PIN SUB–D CONNECTOR
1	RELAY K4 PIN 2 COIL (–) RETURN	1	1	1	1	MODULE 10 FAULT – GROUND
2	RELAY K3 PIN 2 COIL (–) RETURN	2	2	2	2	MODULE 12 FAULT – GROUND
3	RELAYS K1 THRU K4 PIN 1 COIL (+)	3	3	3	3	DC +12V TO RELAY COILS
4	RELAY K2 PIN 2 COIL (–) RETURN	4	4	4	4	MODULE 14 FAULT – GROUND
5	RELAY K1 PIN 2 COIL (–) RETURN	5	5	5	5	MODULE 16 FAULT – GROUND
6	LOGIC GROUND	6	6	6	6	LOGIC GROUND
7	LOGIC GROUND	7	7	7	7	LOGIC GROUND
8	LOGIC GROUND	8	8	8	8	LOGIC GROUND
9	LOGIC GROUND	9	9	9	9	LOGIC GROUND

FM–10S/FMi–703 OVERALL SCHEMATIC SHT. 7 OF 7 (PAGE 1 OF 4)			909–1010–206 / 909–0703–206
P.S. DISTRIBUTION BOARD AND P.S. HARNESS			
CONNECTOR PIN–OUTS			
P.S. DISTRIB. BOARD			5KW POWER SUPPLY
CONNECTOR	DATA CABLE	CIRCUIT FUNCTION	PS# 1 THRU PS# 5
J1 THRU J5	P1/P6 THRU P5/P10		J1
1	1	SENSE + (DC OUT SAMPLE)	1
2	2	VC+ (CONTROL VOLTAGE)	2
3	3	FAULT	3
4	4	VC_GND	4
9	9	LOGIC GND	9
10	10	CURRENT SHARE	10
13	13	P.S. INHIBIT	13
P.S. DISTRIB. BOARD			TEMP SENSOR BOARD
	¿	¿	¿
CONNECTOR	WIRE HARNESS	CIRCUIT FUNCTION	(INLET)
J6	P6/P15		J1
1	145	+12V	1
2	N/C	TEMP SAMPLE (.01V/DEG.C)	2
3	146	TEMP SAMPLE X 5	3
4	147	GND	4
P.S. DISTRIB. BOARD			
CONNECTOR	WIRE HARNESS	CIRCUIT FUNCTION	OCR
J8	P8		K1
1	143	OCR CONTROL (+12V)	E3
2	144	LOGIC GND	E4
P.S. DISTRIB. BOARD			
CONNECTOR	WIRE HARNESS	CIRCUIT FUNCTION	5KW POWER SUPPLY
J9	P9		PS# 1 THRU PS# 5
1	RED	SENSE + (DC OUT SAMPLE)	DC OUTPUT BUS +
2	BLACK	VC_GND	DC OUTPUT BUS –

FM–10S/FMi–703 OVERALL SCHEMATIC SHT. 7 OF 7 (PAGE 2 OF 4)			909–1010–206 / 909–0703–206
P.S. DISTRIBUTION BOARD AND P.S. HARNESS			
CONNECTOR PIN–OUTS CONTD_			
P.S. DISTRIB. BOARD			CONTROLLER
CONNECTOR	WIRE HARNESS	CIRCUIT FUNCTION	MODULE CONTROL BOARD
J10	P10/P7A		J7
1	BLACK	VC+	1
2	RED	VC GND	2
3	GREEN	P.S.FAULT 1	3
4	WHITE	LOGIC GND	4
5	BROWN	P.S.INHIBIT	5
6	BLUE	P.S.FAULT 2	6
7	ORANGE	P.S.FAULT 3	7
8	YELLOW	P.S.FAULT 4	8
9	VIOLET	P.S.FAULT 5	9
10	GRAY	TEMP SAMPLE X 5 (INLET)	10
11	PINK	HI/LO AC LINE SENSOR	11
12	TAN	OCR CONTROL (+12V)	12
13	RED/GREEN	+24V	13
14	RED/YELLOW	+48V (DC OUT SAMPLE)	14
15	RED/BLACK	+5V	15
16	WHITE/BLACK	+5V	16
17	WHITE/RED	+5V	17
18	WHITE/GREEN	GND	18
19	WHITE/YELLOW	GND	19
20	WHITE/BLUE	GND	20
21	WHITE/BROWN	GND	21
22	WHITE/ORANGE	–12V	22
23	WHITE/GRAY	–12V	23
24	WHITE/VIOLET	+12V	24
25	BLACK/RED	+12V	25

FM–10S/FMi–703 OVERALL SCHEMATIC SHT. 7 OF 7 (PAGE 3 OF 4)			909–1010–206 / 909–0703–206	
P.S. DISTRIBUTION BOARD AND P.S. HARNESS				
CONNECTOR PIN–OUTS CONTD_				
P.S. DISTRIB. BOARD				LOW VOLTAGE
CONNECTOR	WIRE HARNESS	CIRCUIT FUNCTION	WIRE HARNESS	POWER SUPPLY
J11	P11		P12	J2
1	132	+5V	132	1
2	131	+5V	131	2
3	130	+5V	130	3
4	129	GND	129	4
5	128	GND	128	5
6	127	GND	127	6
7	126	GND	126	7
8	125	+12V	125	8
9	124	+12V	124	9
10	123	GND	123	10
11	122	–12V	122	11
12	121	+24V	N/C	12
			121	13
				LOW VOLTAGE
		CIRCUIT FUNCTION	WIRE HARNESS	POWER SUPPLY
			P13	J1
		GND	136	1
			N/C	2
		AC LINE PHASE 1	138	3
			N/C	4
		AC LINE PHASE 2 (SWITCHED)	137	5

FM–10S/FMi–703 OVERALL SCHEMATIC SHT. 7 OF 7 (PAGE 4 OF 4)			909–1010–206 / 909–0703–206		
P.S. DISTRIBUTION BOARD AND P.S. HARNESS					
CONNECTOR PIN–OUTS CONTD_					
P.S. DISTRIB. BOARD	DATA CABLE		MOTHERBOARD ”A”/”C’ OR ”B”/”D”		
CONNECTOR	P12/P201A OR	CIRCUIT FUNCTION	DC CONNECTOR BOARD		MOTHER-BOARD
	¿	¿	¿	¿	¿
J12 OR J13	P13/P201B		J201	J202	J115
1	1	+12V	1	1	1
2	2	+12V	2	2	2
3	3	N/C	3	4	4
4	4	–12V	4	6	6
5	5	+5V	5	9	9
6	6	+12V	6	3	3
7	7	N/C	7	5	5
8	8	–12V	8	7	7
9	9	–12V	9	8	8
SHELL	SHIELD	CHASSIS GND	CHASSIS GND	10	10
POWER SUPPLY HARNESS		CIRCUIT FUNCTION	AC LINE FAULT IND. BOARD		
CONNECTOR P1	WIRE NO.		J1		
1	242	LOSS OF AC LINE PHASE 1–2	1		
2	243	LOGIC GND	2		
3	240	LOSS OF AC LINE PHASE 2–3	3		
4	241	LOGIC GND	4		
5	244	LOSS OF AC LINE PHASE 3–1	5		
6	245	LOGIC GND	6		

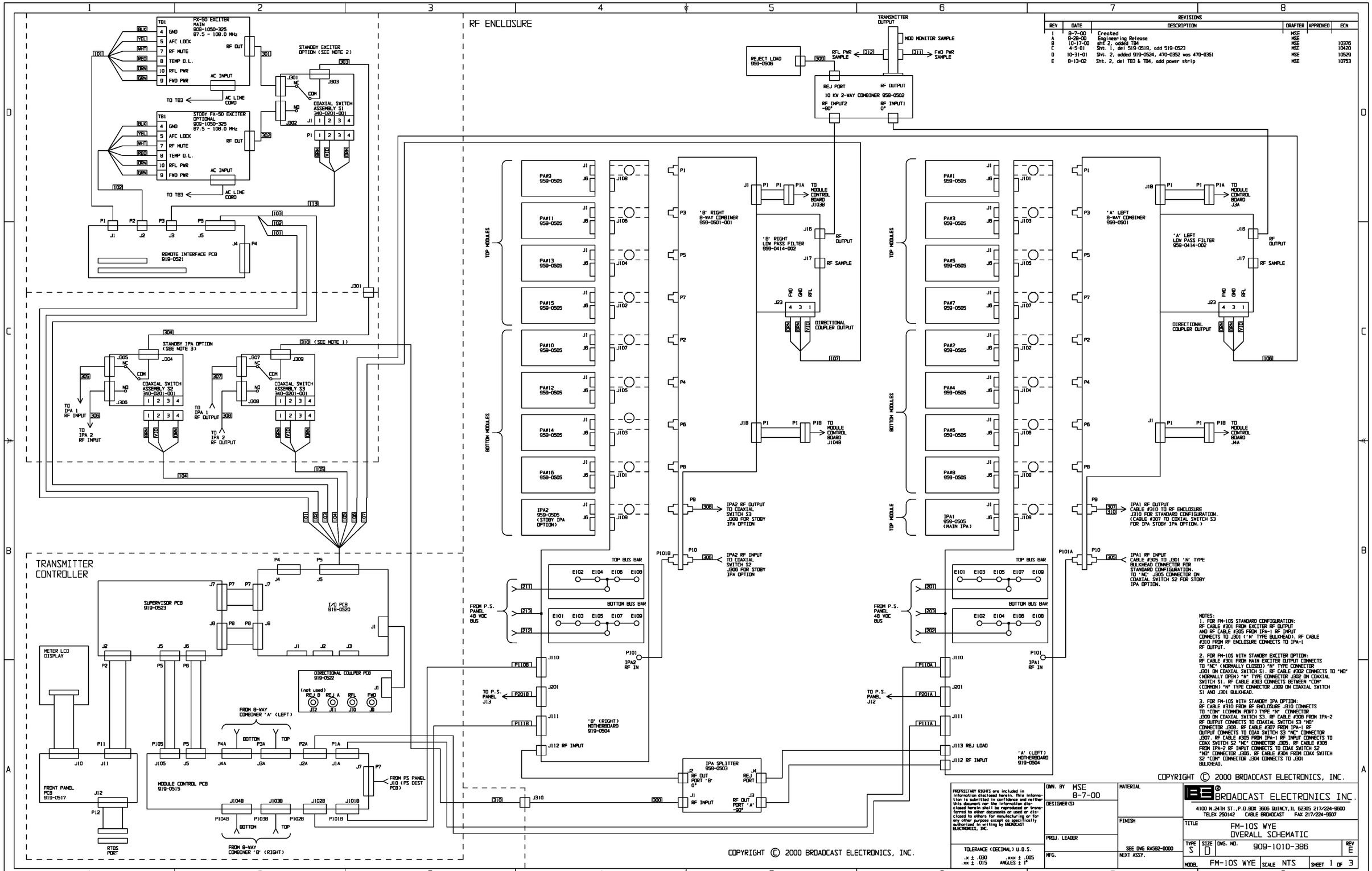

NOTES:

1. FOR FM-10S STANDARD CONFIGURATION: RF CABLE #301 FROM EXCITER RF OUTPUT AND RF CABLE #305 FROM IPA-1 RF INPUT CONNECTS TO J301 ('N' TYPE BULKHEAD). RF CABLE #310 FROM RF ENCLOSURE CONNECTS TO IPA-1 RF OUTPUT.

2. FOR FM-10S WITH STANDBY EXCITER OPTION: RF CABLE #301 FROM MAIN EXCITER OUTPUT CONNECTS TO "NC" (NORMALLY CLOSED) "N" TYPE CONNECTOR J301 ON COAXIAL SWITCH S1. RF CABLE #302 CONNECTS TO "NO" (NORMALLY OPEN) "N" TYPE CONNECTOR J302 ON COAXIAL SWITCH S1. RF CABLE #303 CONNECTS BETWEEN "COM" (COMMON) "N" TYPE CONNECTOR J303 ON COAXIAL SWITCH S1 AND J301 BULKHEAD.

3. FOR FM-10S WITH STANDBY IPA OPTION: RF CABLE #310 FROM RF ENCLOSURE J310 CONNECTS TO "COM" (COMMON PORT) TYPE "N" CONNECTOR J309 ON COAXIAL SWITCH S3. RF CABLE #308 FROM IPA-2 RF OUTPUT CONNECTS TO COAXIAL SWITCH S3 "NO" CONNECTOR J308. RF CABLE #307 FROM IPA-1 RF OUTPUT CONNECTS TO COAX SWITCH S3 "NC" CONNECTOR J307. RF CABLE #305 FROM IPA-1 RF INPUT CONNECTS TO COAX SWITCH S2 "NC" CONNECTOR J305. RF CABLE #306 FROM IPA-2 RF INPUT CONNECTS TO COAX SWITCH S2 "NO" CONNECTOR J306. RF CABLE #304 FROM COAX SWITCH S2 "COM" CONNECTOR J304 CONNECTS TO J301 BULKHEAD.

REVISIONS

REV	DATE	DESCRIPTION	DRAFTER	APPROVED	ECN
1	8-7-00	Created	MSE		
A	9-28-00	Engineering Release	MSE		
B	10-17-00	shtⁿ 2, added TB4	MSE		10376
C	4-5-01	Sht. 1, del 519-0519, add 519-0523	MSE		10420
D	10-31-01	Sht. 2, added 919-0524, 470-0352 was 470-0351	MSE		10529
E	8-13-02	Sht. 2, del TB3 & TB4, add power strip	MSE		10753

TOLERANCE (DECIMAL) U.O.S.
.x ± .030 .xxx ± .005
.xx ± .015 ANGLES ± 1°

DWN. BY MSE 8-7-00
DESIGNER(S)
PROJ. LEADER
MFG.
MATERIAL
FINISH
SEE DWG RA592-0000
NEXT ASSY.

BROADCAST ELECTRONICS INC.
4100 N.24TH ST., P.O. BOX 3606 QUINCY, IL 62305 217/224-9600
TELEX 250142 CABLE BROADCAST FAX 217/224-9607

TITLE FM-10S WYE OVERALL SCHEMATIC

TYPE S | SIZE D | DWG. NO. 909-1010-386 | REV E

MODEL FM-10S WYE | SCALE NTS | SHEET 1 OF 3

REVISIONS					
REV	DATE	DESCRIPTION	DRAFTER	APPROVED	ECN
1	8-7-00	Created	MSE		
A	9-28-00	Engineering Release	MSE		
B	10-17-00	Added TB4	MSE		10376
D	10-31-01	added 919-0524, 470-0352 was 470-0351	MSE		10529
E	8-13-02	Del TB3 & TB4, add power strip	MSE		10753

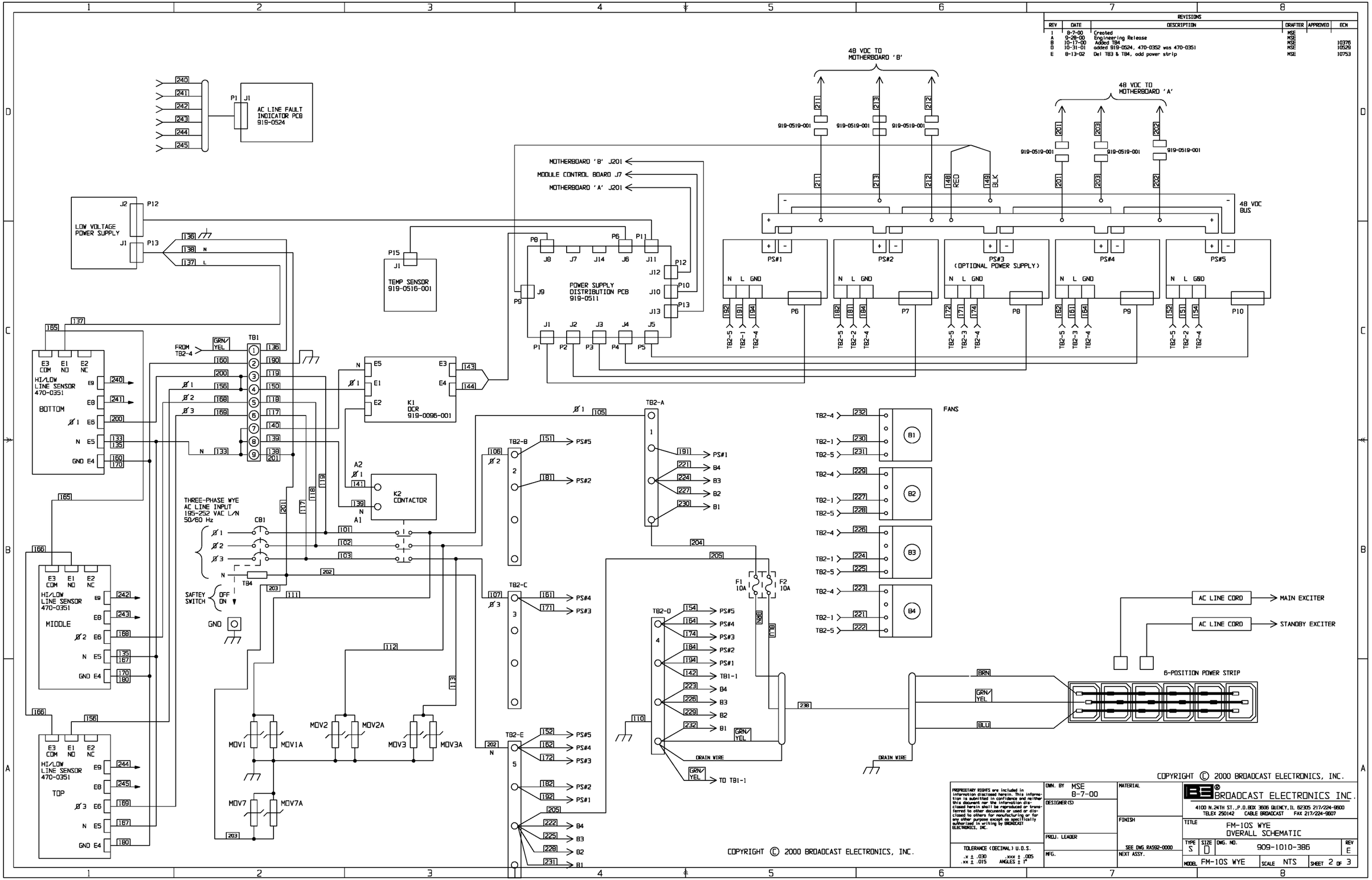

PROPRIETARY RIGHTS are included in information disclosed herein. This information is submitted in confidence and neither this document nor the information disclosed herein shall be reproduced or transferred to other documents or used or disclosed to others for manufacturing or for any other purpose except as specifically authorized in writing by BROADCAST ELECTRONICS, INC.

TOLERANCE (DECIMAL) U.O.S.
.x ± .030 .xxx ± .005
.xx ± .015 ANGLES ± 1°

DWN. BY MSE 8-7-00
DESIGNER(S)
PROJ. LEADER
MFG.
MATERIAL
FINISH
SEE DWG RA592-0000
NEXT ASSY.

BROADCAST ELECTRONICS INC.
4100 N.24TH ST.,P.O.BOX 3606 QUINCY,IL 62305 217/224-9600
TELEX 250142 CABLE BROADCAST FAX 217/224-9607

TITLE FM-10S WYE OVERALL SCHEMATIC

TYPE	SIZE	DWG. NO.	REV
S	D	909-1010-386	E

MODEL FM-10S WYE SCALE NTS SHEET 2 OF 3

REVISIONS					
REV	DATE	DESCRIPTION	DRAFTER	APPROVED	ECN
A	9-28-00	Engineering Release	MSE		

MOTHERBOARD J107 <-> RF MODULE J6

1	GND
2	RF IN
3	RF IN
4	GND
5	GND
6	+5V
7	-12V
8	LOGIC GND
9	LOGIC GND
10	GND
11	GND
12	GND
13	SELECT MOD 7
14	GND
15	VDC E107
16	VDC E107
17	VDC E107
18	PRESENCE MOD 7B
19	PRESENCE MOD 7A
20	GND
21	GND
22	GND
23	+12V
24	RESET
25	BIAS CTL MOD 7
26	FWD PWR
27	RFL PWR
28	TEMP
29	MOD CURRENT
30	SPARE
31	GND
32	GND
33	VDC E107
34	VDC E107
35	VDC E107
36	GND

MOTHERBOARD J109 <-> RF MODULE J6

1	GND
2	RF IN
3	RF IN
4	GND
5	GND
6	+5V
7	-12V
8	LOGIC GND
9	LOGIC GND
10	GND
11	GND
12	GND
13	SELECT MOD 9
14	GND
15	VDC E109
16	VDC E109
17	VDC E109
18	PRESENCE MOD 9B
19	PRESENCE MOD 9A
20	GND
21	GND
22	GND
23	+12V
24	RESET
25	BIAS CTL MOD 9
26	FWD PWR
27	RFL PWR
28	TEMP
29	MOD CURRENT
30	SPARE
31	GND
32	GND
33	VDC E109
34	VDC E109
35	VDC E109
36	GND

MOTHERBOARD J101 <-> RF MODULE J6

1	GND
2	RF IN
3	RF IN
4	GND
5	GND
6	+5V
7	-12V
8	LOGIC GND
9	LOGIC GND
10	GND
11	GND
12	GND
13	SELECT MOD 1
14	GND
15	VDC E101
16	VDC E101
17	VDC E101
18	PRESENCE MOD 1B
19	PRESENCE MOD 1A
20	GND
21	GND
22	GND
23	+12V
24	RESET
25	BIAS CTL MOD 1
26	FWD PWR
27	RFL PWR
28	TEMP
29	MOD CURRENT
30	SPARE
31	GND
32	GND
33	VDC E101
34	VDC E101
35	VDC E101
36	GND

MOTHERBOARD J103 <-> RF MODULE J6

1	GND
2	RF IN
3	RF IN
4	GND
5	GND
6	+5V
7	-12V
8	LOGIC GND
9	LOGIC GND
10	GND
11	GND
12	GND
13	SELECT MOD 3
14	GND
15	VDC E103
16	VDC E103
17	VDC E103
18	PRESENCE MOD 3B
19	PRESENCE MOD 3A
20	GND
21	GND
22	GND
23	+12V
24	RESET
25	BIAS CTL MOD 3
26	FWD PWR
27	RFL PWR
28	TEMP
29	MOD CURRENT
30	SPARE
31	GND
32	GND
33	VDC E103
34	VDC E103
35	VDC E103
36	GND

MOTHERBOARD J105 <-> RF MODULE J6

1	GND
2	RF IN
3	RF IN
4	GND
5	GND
6	+5V
7	-12V
8	LOGIC GND
9	LOGIC GND
10	GND
11	GND
12	GND
13	SELECT MOD 5
14	GND
15	VDC E105
16	VDC E105
17	VDC E105
18	PRESENCE MOD 5B
19	PRESENCE MOD 5A
20	GND
21	GND
22	GND
23	+12V
24	RESET
25	BIAS CTL MOD 5
26	FWD PWR
27	RFL PWR
28	TEMP
29	MOD CURRENT
30	SPARE
31	GND
32	GND
33	VDC E105
34	VDC E105
35	VDC E105
36	GND

MOTHERBOARD J102 <-> RF MODULE J6

1	GND
2	RF IN
3	RF IN
4	GND
5	GND
6	+5V
7	-12V
8	LOGIC GND
9	LOGIC GND
10	GND
11	GND
12	GND
13	SELECT MOD 2
14	GND
15	VDC E102
16	VDC E102
17	VDC E102
18	PRESENCE MOD 2B
19	PRESENCE MOD 2A
20	GND
21	GND
22	GND
23	+12V
24	RESET
25	BIAS CTL MOD 2
26	FWD PWR
27	RFL PWR
28	TEMP
29	MOD CURRENT
30	SPARE
31	GND
32	GND
33	VDC E102
34	VDC E102
35	VDC E102
36	GND

MOTHERBOARD J104 <-> RF MODULE J6

1	GND
2	RF IN
3	RF IN
4	GND
5	GND
6	+5V
7	-12V
8	LOGIC GND
9	LOGIC GND
10	GND
11	GND
12	GND
13	SELECT MOD 4
14	GND
15	VDC E104
16	VDC E104
17	VDC E104
18	PRESENCE MOD 4B
19	PRESENCE MOD 4A
20	GND
21	GND
22	GND
23	+12V
24	RESET
25	BIAS CTL MOD 4
26	FWD PWR
27	RFL PWR
28	TEMP
29	MOD CURRENT
30	SPARE
31	GND
32	GND
33	VDC E104
34	VDC E104
35	VDC E104
36	GND

MOTHERBOARD J106 <-> RF MODULE J6

1	GND
2	RF IN
3	RF IN
4	GND
5	GND
6	+5V
7	-12V
8	LOGIC GND
9	LOGIC GND
10	GND
11	GND
12	GND
13	SELECT MOD 6
14	GND
15	VDC E106
16	VDC E106
17	VDC E106
18	PRESENCE MOD 6B
19	PRESENCE MOD 6A
20	GND
21	GND
22	GND
23	+12V
24	RESET
25	BIAS CTL MOD 6
26	FWD PWR
27	RFL PWR
28	TEMP
29	MOD CURRENT
30	SPARE
31	GND
32	GND
33	VDC E106
34	VDC E106
35	VDC E106
36	GND

MOTHERBOARD J108 <-> RF MODULE J6

1	GND
2	RF IN
3	RF IN
4	GND
5	GND
6	+5V
7	-12V
8	LOGIC GND
9	LOGIC GND
10	GND
11	GND
12	GND
13	SELECT MOD 8
14	GND
15	VDC E108
16	VDC E108
17	VDC E108
18	PRESENCE MOD 8B
19	PRESENCE MOD 8A
20	GND
21	GND
22	GND
23	+12V
24	RESET
25	BIAS CTL MOD 8
26	FWD PWR
27	RFL PWR
28	TEMP
29	MOD CURRENT
30	SPARE
31	GND
32	GND
33	VDC E108
34	VDC E108
35	VDC E108
36	GND

MOTHERBOARD J110 <-> CONTROLLER P1A

1	SELECT MOD 9
2	LOGIC GND
3	LOGIC GND
4	RESET
5	LOGIC GND
6	BIAS CTL MOD 7
7	SELECT MOD 7
8	BIAS CTL MOD 5
9	SELECT MOD 5
10	PRESENCE MOD 3A
11	PRESENCE MOD 3B
12	SELECT MOD 3
13	PRESENCE MOD 1A
14	BIAS CTL MOD 1
15	SELECT MOD 1
16	BIAS CTL MOD 3
17	PRESENCE MOD 1B
18	PRESENCE MOD 5B
19	PRESENCE MOD 5A
20	PRESENCE MOD 7B
21	PRESENCE MOD 7A
22	N/C
23	N/C
24	BIAS CTL MOD 9
25	LOGIC GND

MOTHERBOARD J111 <-> CONTROLLER P2A

1	PRESENCE MOD 6A
2	BIAS CTL MOD 6
3	PRESENCE MOD 6B
4	SELECT MOD 6
5	PRESENCE MOD 8A
6	BIAS CTL MOD 8
7	PRESENCE MOD 8B
8	SELECT MOD 8
9	TEMP SAMPLE X10
10	FWD PWR
11	TEMP
12	SPARE
13	N/C
14	PRESENCE MOD 9B
15	MOD CURRENT
16	RFL PWR
17	PRESENCE MOD 9A
18	PRESENCE MOD 4A
19	BIAS CTL MOD 4
20	PRESENCE MOD 4B
21	SELECT MOD 4
22	PRESENCE MOD 2A
23	BIAS CTL MOD 2
24	PRESENCE MOD 2B
25	SELECT MOD 2

P.S DIST PCB J10 <-> CONTROLLER J7

1	VC+
2	VC GND
3	FAULT 1
4	LOGIC GND
5	INHIBIT
6	FAULT 2
7	FAULT 3
8	FAULT 4
9	FAULT 5
10	TEMP SAMPLE
11	H/L AC LINE SENSOR
12	OCR CONTROL
13	+24V
14	+48V SAMPLE
15	+5V
16	+5V
17	+5V
18	GND
19	GND
20	GND
21	GND
22	-12V
23	-12V
24	+12V
25	+12V

P.S DIST PCB J12/J13 <-> MOTHEBOARD A & B J201/J115

1	+12V
2	+12V
3	+12V
4	N/C
5	N/C
6	-12V
7	-12V
8	-12V
9	+15V
10	CHASSIS GND

TOLERANCE (DECIMAL) U.O.S.
.x ± .030 .xxx ± .005
.xx ± .015 ANGLES ± 1°

DWN. BY MSE 8-11-00
DESIGNER(S)
PROJ. LEADER
MFG.
MATERIAL
FINISH
SEE DWG RA592-0000
NEXT ASSY.

BROADCAST ELECTRONICS INC.
4100 N.24TH ST.,P.O.BOX 3606 QUINCY, IL 62305 217/224-9600
TELEX 250142 CABLE BROADCAST FAX 217/224-9607

TITLE FM-10S WYE
OVERALL SCHEMATIC

TYPE	SIZE	DWG. NO.	REV
S	D	909-1010-386	E

MODEL FM10S WYE SCALE NTS SHEET 3 OF 3

COPYRIGHT © 2000 BROADCAST ELECTRONICS, INC.

FM–10S OVERALL SCHEMATIC SHT. 4 OF 7 (PAGE 1)			CONTROLLER I/O BOARD AND WIRE HARNESS				37–PIN SUB–D CONNECTOR PIN–OUTS				
37–PIN			25–PIN			MAIN	STAND-BY	EXC	IPA IN	IPA OUT	LOW
CON-TROL-LER	WIRE	CIRCUIT FUNCTION	CON-TROL-LER	CON-TROL-LER	WIRE	FX–50	FX–50	RELAY	RELAY	RELAY	PASS
I/O BOARD	HARNESS		RMTE I/F BD	RMTE I/F BD	HAR-NESS	EXCIT-ER	EXCIT-ER	S1	S2	S3	FILTER
J5 ——— P5	WIRE NO.		J5 ——— P5		WIRE NO.	TB1	TB1	J1 ——— P1	J1 ——— P1	J1 ——— P1	J23
1	102–WHT	STBY EXC RF MUTE	12	J2–3	P2/112–WHT		7				
2	102–YEL	STBY EXC AFC LOCK	13	J2–4	P2/112–YEL		5				
3	104–RED	IPA IN RELAY CONTROL							2		
4	105–RED	IPA OUT RELAY CONTROL								2	
5	103–RED	EXC OUT RELAY CON-TROL	20	J3–2	P3/113–RED			2			
6	103 GRN	EXC RELAY TALLY	21	J3–3	P3/113–GRN			4			
7	104–GRN	IPA IN RELAY TALLY							4		
8	JUMPER	INTERLOCK RETURN									
9	101–RED	MAIN EXC OVER TEMP	5	J1–5	P1/111–RED	8					
10	101–YEL	MAIN EXC AFC LOCK	4	J1–4	P1/111–YEL	5					
11	105–GRN	IPA OUT RELAY TALLY								4	
12	101–BLU	NOT USED	7	J1–7	P1/111–BLU						
13	102–BLU	NOT USED	16	J2–7	P2/112–BLU						
14	101–GRN	MAIN EXC FWD PWR	1	J1–4	P1/111–GRN	9					
15	101–ORN	MAIN EXC RFL PWR	2	J1–2	P1/111–ORN	10					
16	101–WHT	MAIN EXC RF MUTE	3	J1–3	P1/111–WHT	7					
17	106–GRN	FILTER A (1) FWD PWR									4
18	106–RED	FILTER A (1) RFL PWR									1
19	107–GRN	FILTER B (2) FWD PWR									4
20	107–RED	FILTER B (2) RFL PWR									1
21											
22											
23											
24											
25	JUMPER	INTERLOCK OUT									
26	104–BLK	+24V' TO IPA IN RELAY							1		

27	105–BLK	+24V' TO IPA OUT RELAY								1	
28	103–BLK	+24V' TO EXC RELAY	19	J3–1	P3/113–BLK			1			
29	102–GRN	STBY EXC FWD PWR	10	J2–1	P2/112–GRN		9				
30	102–ORN	STBY EXC RFL PWR	11	J2–2	P2/112–ORN		10				
31	102–RED	STBY EXC OVER TEMP	14	J2–5	P2/111–RED		8				
32	101–BLK	GND TO MAIN EXC	6	J1–6	P1/111–BLK	4					
33	102–BLK	GND TO STBY EXC	15	J2–6	P2/112–BLK		4				
34	106–BLK	FILTER A (1) GND RETURN									3
35	107–BLK	FILTER B (2) GND RETURN									3
36											
37											

FM–10S/FMi–703 OVERALL SCHEMATIC SHT. 5 OF 7 (PAGE 1 OF 3)				
MOTHERBOARD AND CONTROLLER MODULE CONTROL BOARD				
25–PIN SUB–D CONNECTOR PIN–OUTS				
		DATA	CONTROLLER	CONTROLLER
MOTHERBOARD CONNECTORS		CABLE	CHASSIS	MODULE CONTROL BD
J110	MOTHERBD ”A” LEFT	P110A/P1A	J1A	J1
J110	MOTHERBD ”B” RIGHT	P110B/P101B	J101B	J101
1	SELECT MODULE 9	1	1	1
2	LOGIC GND	2	2	2
3	LOGIC GND	3	3	3
4	RESET	4	4	4
5	LOGIC GND	5	5	5
6	BIAS CONTROL MODULE 7	6	6	6
7	SELECT MODULE 7	7	7	7
8	BIAS CONTROL MODULE 5	8	8	8
9	SELECT MODULE 5	9	9	9
10	PRESENCE MODULE 3A	10	10	10
11	PRESENCE MODULE 3B	11	11	11
12	SELECT MODULE 3	12	12	12
13	PRESENCE MODULE 1A	13	13	13
14	BIAS CONTROL MODULE 1	14	14	14
15	SELECT MODULE 1	15	15	15
16	BIAS CONTROL MODULE 3	16	16	16
17	PRESENCE MODULE 1B	17	17	17
18	PRESENCE MODULE 5B	18	18	18
19	PRESENCE MODULE 5A	19	19	19
20	PRESENCE MODULE 7B	20	20	20
21	PRESENCE MODULE 7A	21	21	21
22	N/C	22	22	22
23	N/C	23	23	23
24	BIAS CONTROL MODULE 9	24	24	24
25	LOGIC GND	25	25	25

FM–10S/FMi–703 OVERALL SCHEMATIC SHT. 5 OF 7 (PAGE 2 OF 3)				
MOTHERBOARD AND CONTROLLER MODULE CONTROL BOARD				
25–PIN SUB–D CONNECTOR PIN–OUTS CONTD_				
		DATA	CONTROLLER	CONTROLLER
MOTHERBOARD CONNECTORS		CABLE	CHASSIS	MODULE CONTROL BD
J111	MOTHERBD ”A” LEFT	P111A/P2A	J2A	J2
J111	MOTHERBD ”B” RIGHT	P111B/P102B	J102B	J102
1	PRESENCE MODULE 6A	1	1	1
2	BIAS CONTROL MODULE 6	2	2	2
3	PRESENCE MODULE 6B	3	3	3
4	SELECT MODULE 6	4	4	4
5	PRESENCE MODULE 8A	5	5	5
6	BIAS CONTROL MODULE 8	6	6	6
7	PRESENCE MODULE 8B	7	7	7
8	SELECT MODULE 8	8	8	8
9	TEMP SAMPLE X 5 (IPA REJ LOAD)	9	9	9
10	MODULE FORWARD POWER	10	10	10
11	MODULE TEMPERATURE	11	11	11
12	SPARE	12	12	12
13	N/C	13	13	13
14	PRESENCE MODULE 9B	14	14	14
15	MODULE CURRENT	15	15	15
16	MODULE REFLECTED POWER	16	16	16
17	PRESENCE MODULE 9A	17	17	17
18	PRESENCE MODULE 4A	18	18	18
19	BIAS CONTROL MODULE 4	19	19	19
20	PRESENCE MODULE 4B	20	20	20
21	SELECT MODULE 4	21	21	21
22	PRESENCE MODULE 2A	22	22	22
23	BIAS CONTROL MODULE 2	23	23	23
24	PRESENCE MODULE 2B	24	24	24
25	SELECT MODULE 2	25	25	25

FM–10S/FMi–703 OVERALL SCHEMATIC SHT. 5 OF 7 (PAGE 3 OF 3)			
MOTHERBOARD AND IPA SPLITER REJECT LOAD TEMPERATURE SENSOR BOARD			
4–PIN CONNECTOR PIN–OUTS			
MOTHERBOARD ”A”			TEMP SENSOR BOARD
CONNECTOR	WIRE HARNESS	CIRCUIT FUNCTION	(IPA REJECT LOAD)
J114	P114/P1		J1
1	RED	+12V	1
2	N/C	TEMP SAMPLE (.01V/DEG.C)	2
3	BLACK	TEMP SAMPLE X 5	3
4	SHIELD	GND	4

FM–10S/FMi–703 OVERALL SCHEMATIC SHT. 6 OF 7 (PAGE 1 OF 2)						
8–WAY COMBINER ”A” LEFT						
9–PIN SUB–D CONNECTOR PINOUTS						
TOP COMBINER INPUT CONTROL BOARD		RIBBON	DATA	CONTROL-LER		
9–PIN SUB–D CONNECTOR		CABLE	CABLE	CHASSIS	CONTROL-LER MOD-ULE CON-TROL BD	
J1B	8–WAY COMBINER ”A”	P1	P1AT/P3A	J3A	J3	9–PIN SUB–D CONNECTOR
1	RELAY K4 PIN 2 COIL (–) RETURN	1	1	1	1	MODULE 1 FAULT – GROUND
2	RELAY K3 PIN 2 COIL (–) RETURN	2	2	2	2	MODULE 3 FAULT – GROUND
3	RELAYS K1 THRU K4 PIN 1 COIL (+)	3	3	3	3	DC +12V TO RELAY COILS
4	RELAY K2 PIN 2 COIL (–) RETURN	4	4	4	4	MODULE 5 FAULT – GROUND
5	RELAY K1 PIN 2 COIL (–) RETURN	5	5	5	5	MODULE 7 FAULT – GROUND
6	LOGIC GROUND	6	6	6	6	LOGIC GROUND
7	LOGIC GROUND	7	7	7	7	LOGIC GROUND
8	LOGIC GROUND	8	8	8	8	LOGIC GROUND
9	LOGIC GROUND	9	9	9	9	LOGIC GROUND
BOTTOM COMBINER INPUT CONTROL BOARD		RIBBON	DATA	CONTROL-LER		
9–PIN SUB–D CONNECTOR		CABLE	CABLE	CHASSIS	CONTROL-LER MOD-ULE CON-TROL BD	
J1	8–WAY COMBINER ”A”	P1	P1AB/P4A	J4A	J4	9–PIN SUB–D CONNECTOR
1	RELAY K4 PIN 2 COIL (–) RETURN	1	1	1	1	MODULE 2 FAULT – GROUND
2	RELAY K3 PIN 2 COIL (–) RETURN	2	2	2	2	MODULE 4 FAULT – GROUND
3	RELAYS K1 THRU K4 PIN 1 COIL (+)	3	3	3	3	DC +12V TO RELAY COILS
4	RELAY K2 PIN 2 COIL (–) RETURN	4	4	4	4	MODULE 6 FAULT – GROUND
5	RELAY K1 PIN 2 COIL (–) RETURN	5	5	5	5	MODULE 8 FAULT – GROUND
6	LOGIC GROUND	6	6	6	6	LOGIC GROUND
7	LOGIC GROUND	7	7	7	7	LOGIC GROUND
8	LOGIC GROUND	8	8	8	8	LOGIC GROUND
9	LOGIC GROUND	9	9	9	9	LOGIC GROUND

FM–10S/FMi–703 OVERALL SCHEMATIC SHT. 6 OF 7 (PAGE 2 OF 2)						
8–WAY COMBINER ”B” RIGHT						
9–PIN SUB–D CONNECTOR PINOUTS						
TOP COMBINER INPUT CONTROL BOARD		RIBBON	DATA	CONTROL-LER		
9–PIN SUB–D CONNECTOR		CABLE	CABLE	CHASSIS	CONTROL-LER MOD-ULE CON-TROL BD	
J1	8–WAY COMBINER ”B”	P1	P1BT/ P103B	J103B	J103	9–PIN SUB–D CONNECTOR
1	RELAY K4 PIN 2 COIL (–) RETURN	1	1	1	1	MODULE 15 FAULT – GROUND
2	RELAY K3 PIN 2 COIL (–) RETURN	2	2	2	2	MODULE 13 FAULT – GROUND
3	RELAYS K1 THRU K4 PIN 1 COIL (+)	3	3	3	3	DC +12V TO RELAY COILS
4	RELAY K2 PIN 2 COIL (–) RETURN	4	4	4	4	MODULE 11 FAULT – GROUND
5	RELAY K1 PIN 2 COIL (–) RETURN	5	5	5	5	MODULE 9 FAULT – GROUND
6	LOGIC GROUND	6	6	6	6	LOGIC GROUND
7	LOGIC GROUND	7	7	7	7	LOGIC GROUND
8	LOGIC GROUND	8	8	8	8	LOGIC GROUND
9	LOGIC GROUND	9	9	9	9	LOGIC GROUND
BOTTOM COMBINER INPUT CONTROL BOARD		RIBBON	DATA	CONTROL-LER		
9–PIN SUB–D CONNECTOR		CABLE	CABLE	CHASSIS	CONTROL-LER MOD-ULE CON-TROL BD	
J1B	8–WAY COMBINER ”B”	P1	P1BB/P104 B	J104B	J104	9–PIN SUB–D CONNECTOR
1	RELAY K4 PIN 2 COIL (–) RETURN	1	1	1	1	MODULE 10 FAULT – GROUND
2	RELAY K3 PIN 2 COIL (–) RETURN	2	2	2	2	MODULE 12 FAULT – GROUND
3	RELAYS K1 THRU K4 PIN 1 COIL (+)	3	3	3	3	DC +12V TO RELAY COILS
4	RELAY K2 PIN 2 COIL (–) RETURN	4	4	4	4	MODULE 14 FAULT – GROUND
5	RELAY K1 PIN 2 COIL (–) RETURN	5	5	5	5	MODULE 16 FAULT – GROUND
6	LOGIC GROUND	6	6	6	6	LOGIC GROUND
7	LOGIC GROUND	7	7	7	7	LOGIC GROUND
8	LOGIC GROUND	8	8	8	8	LOGIC GROUND
9	LOGIC GROUND	9	9	9	9	LOGIC GROUND

FM–10S/FMi–703 OVERALL SCHEMATIC SHT. 7 OF 7 (PAGE 1 OF 4)			909–1010–386 / 909–0703–386
P.S. DISTRIBUTION BOARD AND P.S. HARNESS			
CONNECTOR PIN–OUTS			
P.S. DISTRIB. BOARD			5KW POWER SUPPLY
CONNECTOR	DATA CABLE	CIRCUIT FUNCTION	PS# 1 THRU PS# 5
J1 THRU J5	P1/P6 THRU P5/P10		J1
1	1	SENSE + (DC OUT SAMPLE)	1
2	2	VC+ (CONTROL VOLTAGE)	2
3	3	FAULT	3
4	4	VC_GND	4
9	9	LOGIC GND	9
10	10	CURRENT SHARE	10
13	13	P.S. INHIBIT	13
P.S. DISTRIB. BOARD			TEMP SENSOR BOARD
	¿	¿	¿
CONNECTOR	WIRE HARNESS	CIRCUIT FUNCTION	(INLET)
J6	P6/P15		J1
1	145	+12V	1
2	N/C	TEMP SAMPLE (.01V/DEG.C)	2
3	146	TEMP SAMPLE X 5	3
4	147	GND	4
P.S. DISTRIB. BOARD			
CONNECTOR	WIRE HARNESS	CIRCUIT FUNCTION	OCR
J8	P8		K1
1	143	OCR CONTROL (+12V)	E3
2	144	LOGIC GND	E4
P.S. DISTRIB. BOARD			
CONNECTOR	WIRE HARNESS	CIRCUIT FUNCTION	5KW POWER SUPPLY
J9	P9		PS# 1 THRU PS# 5
1	RED	SENSE + (DC OUT SAMPLE)	DC OUTPUT BUS +
2	BLACK	VC_GND	DC OUTPUT BUS –

FM–10S/FMi–703 OVERALL SCHEMATIC SHT. 7 OF 7 (PAGE 2 OF 4)			909–1010–386 / 909–0703–386
P.S. DISTRIBUTION BOARD AND P.S. HARNESS			
CONNECTOR PIN–OUTS CONTD_			
P.S. DISTRIB. BOARD			CONTROLLER
CONNECTOR	WIRE HARNESS	CIRCUIT FUNCTION	MODULE CONTROL BOARD
J10	P10/P7A		J7
1	BLACK	VC+	1
2	RED	VC GND	2
3	GREEN	P.S.FAULT 1	3
4	WHITE	LOGIC GND	4
5	BROWN	P.S.INHIBIT	5
6	BLUE	P.S.FAULT 2	6
7	ORANGE	P.S.FAULT 3	7
8	YELLOW	P.S.FAULT 4	8
9	VIOLET	P.S.FAULT 5	9
10	GRAY	TEMP SAMPLE X 5 (INLET)	10
11	PINK	HI/LO AC LINE SENSOR	11
12	TAN	OCR CONTROL (+12V)	12
13	RED/GREEN	+24V	13
14	RED/YELLOW	+48V (DC OUT SAMPLE)	14
15	RED/BLACK	+5V	15
16	WHITE/BLACK	+5V	16
17	WHITE/RED	+5V	17
18	WHITE/GREEN	GND	18
19	WHITE/YELLOW	GND	19
20	WHITE/BLUE	GND	20
21	WHITE/BROWN	GND	21
22	WHITE/ORANGE	–12V	22
23	WHITE/GRAY	–12V	23
24	WHITE/VIOLET	+12V	24
25	BLACK/RED	+12V	25

FM–10S/FMi–703 OVERALL SCHEMATIC SHT. 7 OF 7 (PAGE 3 OF 4)			909–1010–386 / 909–0703–386	
P.S. DISTRIBUTION BOARD AND P.S. HARNESS				
CONNECTOR PIN–OUTS CONTD_				
P.S. DISTRIB. BOARD				LOW VOLTAGE
CONNECTOR	WIRE HARNESS	CIRCUIT FUNCTION	WIRE HARNESS	POWER SUPPLY
J11	P11		P12	J2
1	132	+5V	132	1
2	131	+5V	131	2
3	130	+5V	130	3
4	129	GND	129	4
5	128	GND	128	5
6	127	GND	127	6
7	126	GND	126	7
8	125	+12V	125	8
9	124	+12V	124	9
10	123	GND	123	10
11	122	–12V	122	11
12	121	+24V	N/C	12
			121	13
				LOW VOLTAGE
		CIRCUIT FUNCTION	WIRE HARNESS	POWER SUPPLY
			P13	J1
		GND	136	1
			N/C	2
		AC LINE NEUTRAL	138	3
			N/C	4
		AC LINE PHASE 2 (SWITCHED)	137	5

FM–10S/FMi–703 OVERALL SCHEMATIC SHT. 7 OF 7 (PAGE 4 OF 4)			909–1010–386 / 909–0703–386		
P.S. DISTRIBUTION BOARD AND P.S. HARNESS					
CONNECTOR PIN–OUTS CONTD_					
P.S. DISTRIB. BOARD	DATA CABLE		MOTHERBOARD ”A” OR ”B”		
CONNECTOR	P12/P201A OR	CIRCUIT FUNCTION	DC CONNECTOR BOARD		MO-THER-BOARD
J12 OR J13	P13/P201B		J201	J202	J115
1	1	+12V	1	1	1
2	2	+12V	2	2	2
3	3	N/C	3	4	4
4	4	–12V	4	6	6
5	5	+5V	5	9	9
6	6	+12V	6	3	3
7	7	N/C	7	5	5
8	8	–12V	8	7	7
9	9	–12V	9	8	8
SHELL	SHIELD	CHASSIS GND	CHASSIS GND	10	10
POWER SUPPLY HARNESS		CIRCUIT FUNCTION	AC LINE FAULT IND. BOARD		
CONNECTOR P1	WIRE NO.		J1		
1	240	LOSS OF AC LINE PHASE 1	1		
2	241	LOGIC GND	2		
3	242	LOSS OF AC LINE PHASE 2	3		
4	243	LOGIC GND	4		
5	244	LOSS OF AC LINE PHASE 3	5		
6	245	LOGIC GND	6		

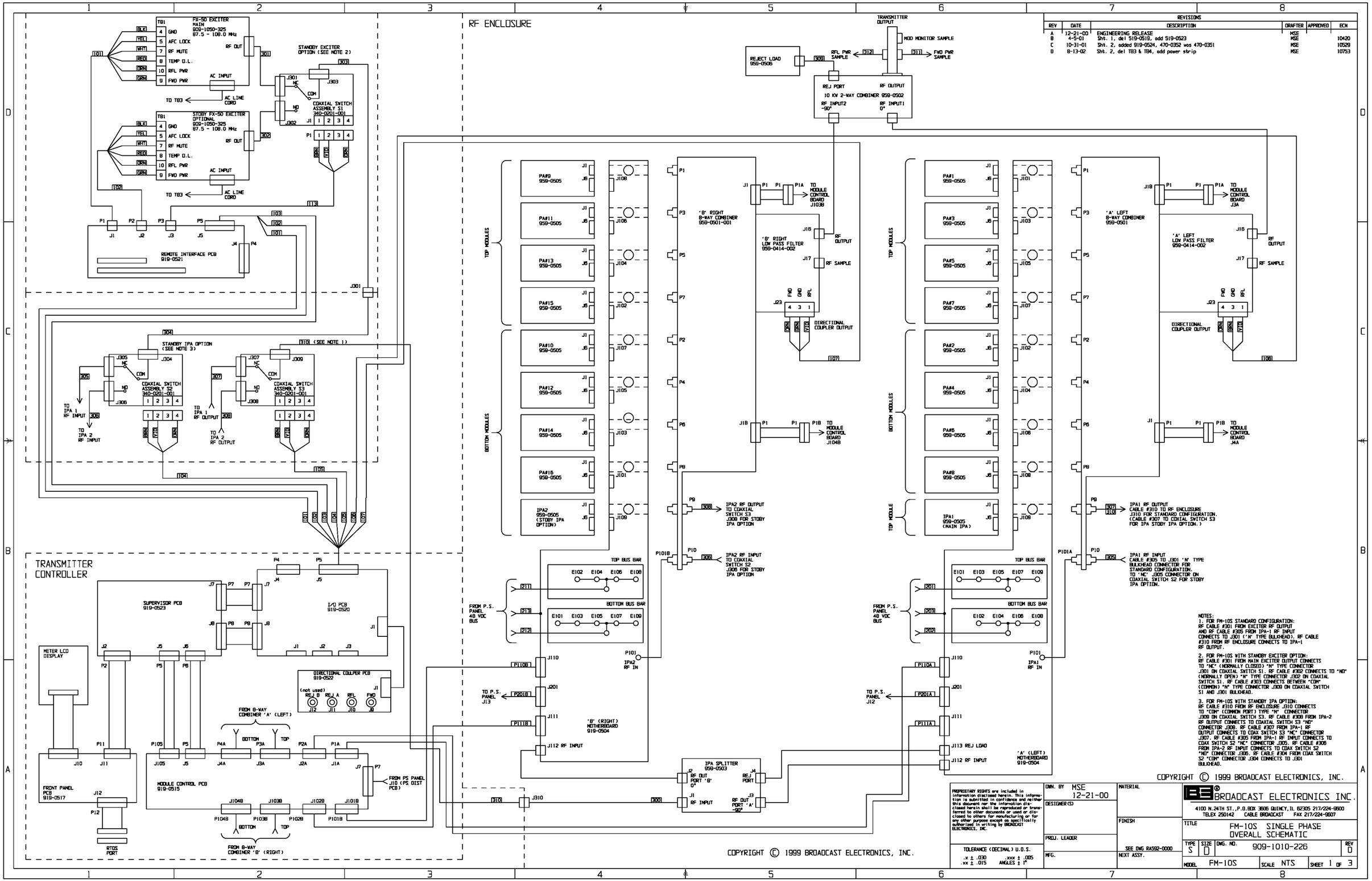

NOTES:

1. FOR FM-10S STANDARD CONFIGURATION: RF CABLE #301 FROM EXCITER RF OUTPUT AND RF CABLE #305 FROM IPA-1 RF INPUT CONNECTS TO J301 ('N' TYPE BULKHEAD). RF CABLE #310 FROM RF ENCLOSURE CONNECTS TO IPA-1 RF OUTPUT.

2. FOR FM-10S WITH STANDBY EXCITER OPTION: RF CABLE #301 FROM MAIN EXCITER OUTPUT CONNECTS TO "NC" (NORMALLY CLOSED) "N" TYPE CONNECTOR J301 ON COAXIAL SWITCH S1. RF CABLE #302 CONNECTS TO "NO" (NORMALLY OPEN) "N" TYPE CONNECTOR J302 ON COAXIAL SWITCH S1. RF CABLE #303 CONNECTS BETWEEN "COM" (COMMON) "N" TYPE CONNECTOR J303 ON COAXIAL SWITCH S1 AND J301 BULKHEAD.

3. FOR FM-10S WITH STANDBY IPA OPTION: RF CABLE #310 FROM RF ENCLOSURE J310 CONNECTS TO "COM" (COMMON PORT) TYPE "N" CONNECTOR J309 ON COAXIAL SWITCH S3. RF CABLE #308 FROM IPA-2 RF OUTPUT CONNECTS TO COAXIAL SWITCH S3 "NO" CONNECTOR J308. RF CABLE #307 FROM IPA-1 RF OUTPUT CONNECTS TO COAX SWITCH S3 "NC" CONNECTOR J307. RF CABLE #305 FROM IPA-1 RF INPUT CONNECTS TO COAX SWITCH S2 "NC" CONNECTOR J305. RF CABLE #306 FROM IPA-2 RF INPUT CONNECTS TO COAX SWITCH S2 "NO" CONNECTOR J306. RF CABLE #304 FROM COAX SWITCH S2 "COM" CONNECTOR J304 CONNECTS TO J301 BULKHEAD.

REVISIONS

REV	DATE	DESCRIPTION	DRAFTER	APPROVED	ECN
A	12-21-00	ENGINEERING RELEASE	MSE		
B	4-5-01	Sht. 1, del 519-0519, add 519-0523	MSE		10420
C	10-31-01	Sht. 2, added 919-0524, 470-0352 was 470-0351	MSE		10529
D	8-13-02	Sht. 2, del TB3 & TB4, add power strip	MSE		10753

TOLERANCE (DECIMAL) U.O.S.
.x ± .030 .xxx ± .005
.xx ± .015 ANGLES ± 1°

DWN. BY MSE 12-21-00
DESIGNER(S)
PROJ. LEADER
MFG.
MATERIAL
FINISH
SEE DWG RA592-0000
NEXT ASSY.

BROADCAST ELECTRONICS INC.
4100 N.24TH ST.,P.O.BOX 3606 QUINCY,IL 62305 217/224-9600
TELEX 250142 CABLE BROADCAST FAX 217/224-9607

TITLE FM-10S SINGLE PHASE OVERALL SCHEMATIC

TYPE S | SIZE D | DWG. NO. 909-1010-226 | REV D

MODEL FM-10S | SCALE NTS | SHEET 1 OF 3

REVISIONS					
REV	DATE	DESCRIPTION	DRAFTER	APPROVED	ECN
A	12-21-00	ENGINEERING RELEASE	MSE		
C	10-31-01	added 919-0524, 470-0352 was 470-0351	MSE		10529
D	8-13-02	del TB3 & TB4, add power strip	MSE		10753

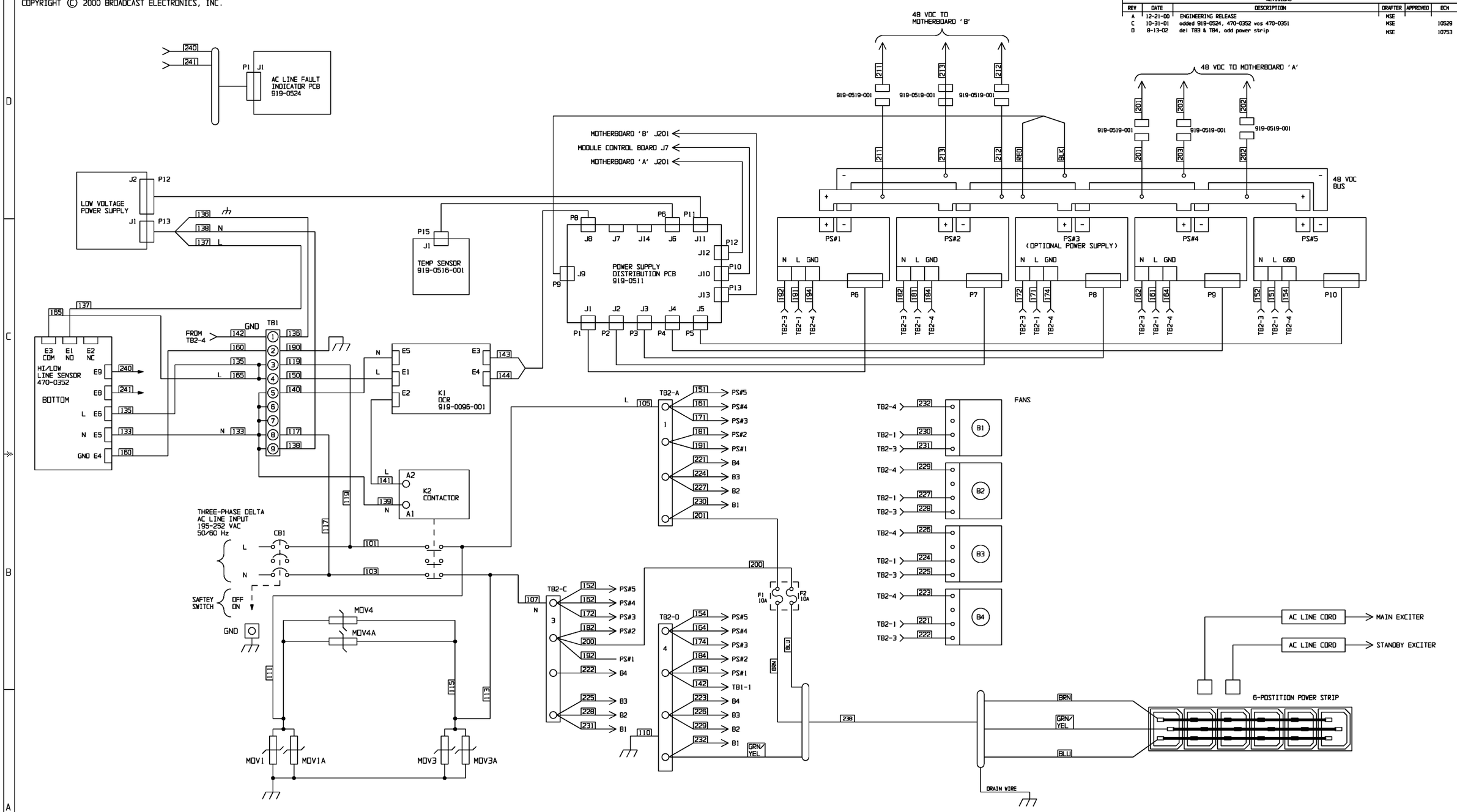

TOLERANCE (DECIMAL) U.O.S.
.x ± .030 .xxx ± .005
.xx ± .015 ANGLES ± 1°

DWN. BY MSE 12-21-00
DESIGNER(S)
PROJ. LEADER
MFG.

MATERIAL
FINISH
SEE DWG RA592-0000
NEXT ASSY.

BROADCAST ELECTRONICS INC.
4100 N.24TH ST.,P.O.BOX 3606 QUINCY,IL 62305 217/224-9600
TELEX 250142 CABLE BROADCAST FAX 217/224-9607

TITLE FM-10S SINGLE PHASE OVERALL SCHEMATIC

TYPE	SIZE	DWG. NO.	REV
S	D	909-1010-226	D

MODEL FM-10S SCALE NTS SHEET 2 OF 3

REVISIONS					
REV	DATE	DESCRIPTION	DRAFTER	APPROVED	ECN
A	12-21-00	Engineering release			

MOTHERBOARD J107 ⟷ RF MODULE J6

1 GND
2 RF IN
3 RF IN
4 GND
5 GND
6 +5V
7 -12V
8 LOGIC GND
9 LOGIC GND
10 GND
11 GND
12 GND
13 SELECT MOD 7
14 GND
15 VOC E107
16 VOC E107
17 VOC E107
18 PRESENCE MOD 7B
19 PRESENCE MOD 7A
20 GND
21 GND
22 GND
23 +12V
24 RESET
25 BIAS CTL MOD 7
26 FWD PWR
27 RFL PWR
28 TEMP
29 MOD CURRENT
30 SPARE
31 GND
32 GND
33 VOC E107
34 VOC E107
35 VOC E107
36 GND

MOTHERBOARD J109 ⟷ RF MODULE J6

1 GND
2 RF IN
3 RF IN
4 GND
5 GND
6 +5V
7 -12V
8 LOGIC GND
9 LOGIC GND
10 GND
11 GND
12 GND
13 SELECT MOD 9
14 GND
15 VOC E109
16 VOC E109
17 VOC E109
18 PRESENCE MOD 9B
19 PRESENCE MOD 9A
20 GND
21 GND
22 GND
23 +12V
24 RESET
25 BIAS CTL MOD 9
26 FWD PWR
27 RFL PWR
28 TEMP
29 MOD CURRENT
30 SPARE
31 GND
32 GND
33 VOC E109
34 VOC E109
35 VOC E109
36 GND

MOTHERBOARD J101 ⟷ RF MODULE J6

1 GND
2 RF IN
3 RF IN
4 GND
5 GND
6 +5V
7 -12V
8 LOGIC GND
9 LOGIC GND
10 GND
11 GND
12 GND
13 SELECT MOD 1
14 GND
15 VOC E101
16 VOC E101
17 VOC E101
18 PRESENCE MOD 1B
19 PRESENCE MOD 1A
20 GND
21 GND
22 GND
23 +12V
24 RESET
25 BIAS CTL MOD 1
26 FWD PWR
27 RFL PWR
28 TEMP
29 MOD CURRENT
30 SPARE
31 GND
32 GND
33 VOC E101
34 VOC E101
35 VOC E101
36 GND

MOTHERBOARD J103 ⟷ RF MODULE J6

1 GND
2 RF IN
3 RF IN
4 GND
5 GND
6 +5V
7 -12V
8 LOGIC GND
9 LOGIC GND
10 GND
11 GND
12 GND
13 SELECT MOD 3
14 GND
15 VOC E103
16 VOC E103
17 VOC E103
18 PRESENCE MOD 3B
19 PRESENCE MOD 3A
20 GND
21 GND
22 GND
23 +12V
24 RESET
25 BIAS CTL MOD 3
26 FWD PWR
27 RFL PWR
28 TEMP
29 MOD CURRENT
30 SPARE
31 GND
32 GND
33 VOC E103
34 VOC E103
35 VOC E103
36 GND

MOTHERBOARD J105 ⟷ RF MODULE J6

1 GND
2 RF IN
3 RF IN
4 GND
5 GND
6 +5V
7 -12V
8 LOGIC GND
9 LOGIC GND
10 GND
11 GND
12 GND
13 SELECT MOD 5
14 GND
15 VOC E105
16 VOC E105
17 VOC E105
18 PRESENCE MOD 5B
19 PRESENCE MOD 5A
20 GND
21 GND
22 GND
23 +12V
24 RESET
25 BIAS CTL MOD 5
26 FWD PWR
27 RFL PWR
28 TEMP
29 MOD CURRENT
30 SPARE
31 GND
32 GND
33 VOC E105
34 VOC E105
35 VOC E105
36 GND

MOTHERBOARD J102 ⟷ RF MODULE J6

1 GND
2 RF IN
3 RF IN
4 GND
5 GND
6 +5V
7 -12V
8 LOGIC GND
9 LOGIC GND
10 GND
11 GND
12 GND
13 SELECT MOD 2
14 GND
15 VOC E102
16 VOC E102
17 VOC E102
18 PRESENCE MOD 2B
19 PRESENCE MOD 2A
20 GND
21 GND
22 GND
23 +12V
24 RESET
25 BIAS CTL MOD 2
26 FWD PWR
27 RFL PWR
28 TEMP
29 MOD CURRENT
30 SPARE
31 GND
32 GND
33 VOC E102
34 VOC E102
35 VOC E102
36 GND

MOTHERBOARD J104 ⟷ RF MODULE J6

1 GND
2 RF IN
3 RF IN
4 GND
5 GND
6 +5V
7 -12V
8 LOGIC GND
9 LOGIC GND
10 GND
11 GND
12 GND
13 SELECT MOD 4
14 GND
15 VOC E104
16 VOC E104
17 VOC E104
18 PRESENCE MOD 4B
19 PRESENCE MOD 4A
20 GND
21 GND
22 GND
23 +12V
24 RESET
25 BIAS CTL MOD 4
26 FWD PWR
27 RFL PWR
28 TEMP
29 MOD CURRENT
30 SPARE
31 GND
32 GND
33 VOC E104
34 VOC E104
35 VOC E104
36 GND

MOTHERBOARD J106 ⟷ RF MODULE J6

1 GND
2 RF IN
3 RF IN
4 GND
5 GND
6 +5V
7 -12V
8 LOGIC GND
9 LOGIC GND
10 GND
11 GND
12 GND
13 SELECT MOD 6
14 GND
15 VOC E106
16 VOC E106
17 VOC E106
18 PRESENCE MOD 6B
19 PRESENCE MOD 6A
20 GND
21 GND
22 GND
23 +12V
24 RESET
25 BIAS CTL MOD 6
26 FWD PWR
27 RFL PWR
28 TEMP
29 MOD CURRENT
30 SPARE
31 GND
32 GND
33 VOC E106
34 VOC E106
35 VOC E106
36 GND

MOTHERBOARD J108 ⟷ RF MODULE J6

1 GND
2 RF IN
3 RF IN
4 GND
5 GND
6 +5V
7 -12V
8 LOGIC GND
9 LOGIC GND
10 GND
11 GND
12 GNB
13 SELECT MOD 8
14 GND
15 VOC E108
16 VOC E108
17 VOC E108
18 PRESENCE MOD 8B
19 PRESENCE MOD 8A
20 GND
21 GND
22 GND
23 +12V
24 RESET
25 BIAS CTL MOD 8
26 FWD PWR
27 RFL PWR
28 TEMP
29 MOD CURRENT
30 SPARE
31 GND
32 GND
33 VOC E108
34 VOC E108
35 VOC E108
36 GND

MOTHERBOARD J110 ⟷ CONTROLLER P1A

1 SELECT MOD 9
2 LOGIC GND
3 LOGIC GND
4 RESET
5 LOGIC GND
6 BIAS CTL MOD 7
7 SELECT MOD 7
8 BIAS CTL MOD 5
9 SELECT MOD 5
10 PRESENCE MOD 3A
11 PRESENCE MOD 3B
12 SELECT MOD 3
13 PRESENCE MOD 1A
14 BIAS CTL MOD 1
15 SELECT MOD 1
16 BIAS CTL MOD 3
17 PRESENCE MOD 1B
18 PRESENCE MOD 5B
19 PRESENCE MOD 5A
20 PRESENCE MOD 7B
21 PRESENCE MOD 7A
22 N/C
23 N/C
24 BIAS CTL MOD 9
25 LOGIC GND

MOTHERBOARD J111 ⟷ CONTROLLER P2A

1 PRESENCE MOD 6A
2 BIAS CTL MOD 6
3 PRESENCE MOD 6B
4 SELECT MOD 6
5 PRESENCE MOD 8A
6 BIAS CTL MOD 8
7 PRESENCE MOD 8B
8 SELECT MOD 8
9 TEMP SAMPLE X10
10 FWD PWR
11 TEMP
12 SPARE
13 N/C
14 PRESENCE MOD 9B
15 MOD CURRENT
16 RFL PWR
17 PRESENCE MOD 9A
18 PRESENCE MOD 4A
19 BIAS CTL MOD 4
20 PRESENCE MOD 4B
21 SELECT MOD 4
22 PRESENCE MOD 2A
23 BIAS CTL MOD 2
24 PRESENCE MOD 2B
25 SELECT MOD 2

P.S DIST PCB J10 ⟷ CONTROLLER J7

1 VC+
2 VC GND
3 FAULT 1
4 LOGIC GND
5 INHIBIT
6 FAULT 2
7 FAULT 3
8 FAULT 4
9 FAULT 5
10 TEMP SAMPLE
11 H/L AC LINE SENSOR
12 OCR CONTROL
13 +24V
14 +48V SAMPLE
15 +5V
16 +5V
17 +5V
18 GND
19 GND
20 GND
21 GND
22 -12V
23 -12V
24 +12V
25 +12V

P.S DIST PCB J12/J13 ⟷ MOTHEBOARD A & B J201/J115

1 +12V
2 +12V
3 +12V
4 N/C
5 N/C
6 -12V
7 -12V
8 -12V
9 +15V
10 CHASSIS GND

TOLERANCE (DECIMAL) U.O.S.
.x ± .030 .xxx ± .005
.xx ± .015 ANGLES ± 1°

DWN. BY MSE 12-21-00
DESIGNER(S)
PROJ. LEADER
MFG.

MATERIAL
FINISH
SEE DWG RA592-0000
NEXT ASSY.

BROADCAST ELECTRONICS INC.
4100 N.24TH ST.,P.O.BOX 3606 QUINCY,IL 62305 217/224-9600
TELEX 250142 CABLE BROADCAST FAX 217/224-9607

TITLE FM-10S SINGLE PHASE OVERALL SCHEMATIC

TYPE	SIZE	DWG. NO.	REV
S	D	909-1010-226	0

MODEL FM10S SCALE NTS SHEET 3 OF 3

FM–10S OVERALL SCHEMATIC SHT. 4 OF 7 (PAGE 1)			CONTROLLER I/O BOARD AND WIRE HARNESS				37–PIN SUB–D CONNECTOR PIN–OUTS				
37–PIN			25–PIN			MAIN	STAND-BY	EXC	IPA IN	IPA OUT	LOW
CON-TROL-LER	WIRE	CIRCUIT FUNCTION	CON-TROL-LER	CON-TROL-LER	WIRE	FX–50	FX–50	RELAY	RELAY	RELAY	PASS
I/O BOARD	HARNESS		RMTE I/F BD	RMTE I/F BD	HAR-NESS	EXCIT-ER	EXCIT-ER	S1	S2	S3	FILTER
J5 ——— P5	WIRE NO.		J5 ——— P5		WIRE NO.	TB1	TB1	J1 ——— P1	J1 ——— P1	J1 ——— P1	J23
1	102–WHT	STBY EXC RF MUTE	12	J2–3	P2/112–WHT		7				
2	102–YEL	STBY EXC AFC LOCK	13	J2–4	P2/112–YEL		5				
3	104–RED	IPA IN RELAY CONTROL							2		
4	105–RED	IPA OUT RELAY CONTROL								2	
5	103–RED	EXC OUT RELAY CON-TROL	20	J3–2	P3/113–RED			2			
6	103 GRN	EXC RELAY TALLY	21	J3–3	P3/113–GRN			4			
7	104–GRN	IPA IN RELAY TALLY							4		
8	JUMPER	INTERLOCK RETURN									
9	101–RED	MAIN EXC OVER TEMP	5	J1–5	P1/111–RED	8					
10	101–YEL	MAIN EXC AFC LOCK	4	J1–4	P1/111–YEL	5					
11	105–GRN	IPA OUT RELAY TALLY								4	
12	101–BLU	NOT USED	7	J1–7	P1/111–BLU						
13	102–BLU	NOT USED	16	J2–7	P2/112–BLU						
14	101–GRN	MAIN EXC FWD PWR	1	J1–4	P1/111–GRN	9					
15	101–ORN	MAIN EXC RFL PWR	2	J1–2	P1/111–ORN	10					
16	101–WHT	MAIN EXC RF MUTE	3	J1–3	P1/111–WHT	7					
17	106–GRN	FILTER A (1) FWD PWR									4
18	106–RED	FILTER A (1) RFL PWR									1
19	107–GRN	FILTER B (2) FWD PWR									4
20	107–RED	FILTER B (2) RFL PWR									1
21											
22											
23											
24											
25	JUMPER	INTERLOCK OUT									
26	104–BLK	+24V' TO IPA IN RELAY							1		

27	105–BLK	+24V' TO IPA OUT RELAY								1	
28	103–BLK	+24V' TO EXC RELAY	19	J3–1	P3/113–BLK			1			
29	102–GRN	STBY EXC FWD PWR	10	J2–1	P2/112–GRN		9				
30	102–ORN	STBY EXC RFL PWR	11	J2–2	P2/112–ORN		10				
31	102–RED	STBY EXC OVER TEMP	14	J2–5	P2/111–RED		8				
32	101–BLK	GND TO MAIN EXC	6	J1–6	P1/111–BLK	4					
33	102–BLK	GND TO STBY EXC	15	J2–6	P2/112–BLK		4				
34	106–BLK	FILTER A (1) GND RETURN									3
35	107–BLK	FILTER B (2) GND RETURN									3
36											
37											

FM–10S/FMi–703 OVERALL SCHEMATIC SHT. 5 OF 7 (PAGE 1 OF 3)				
MOTHERBOARD AND CONTROLLER MODULE CONTROL BOARD				
25–PIN SUB–D CONNECTOR PIN–OUTS				
		DATA	CONTROLLER	CONTROLLER
MOTHERBOARD CONNECTORS		CABLE	CHASSIS	MODULE CONTROL BD
J110	MOTHERBD ”A” LEFT	P110A/P1A	J1A	J1
J110	MOTHERBD ”B” RIGHT	P110B/P101B	J101B	J101
1	SELECT MODULE 9	1	1	1
2	LOGIC GND	2	2	2
3	LOGIC GND	3	3	3
4	RESET	4	4	4
5	LOGIC GND	5	5	5
6	BIAS CONTROL MODULE 7	6	6	6
7	SELECT MODULE 7	7	7	7
8	BIAS CONTROL MODULE 5	8	8	8
9	SELECT MODULE 5	9	9	9
10	PRESENCE MODULE 3A	10	10	10
11	PRESENCE MODULE 3B	11	11	11
12	SELECT MODULE 3	12	12	12
13	PRESENCE MODULE 1A	13	13	13
14	BIAS CONTROL MODULE 1	14	14	14
15	SELECT MODULE 1	15	15	15
16	BIAS CONTROL MODULE 3	16	16	16
17	PRESENCE MODULE 1B	17	17	17
18	PRESENCE MODULE 5B	18	18	18
19	PRESENCE MODULE 5A	19	19	19
20	PRESENCE MODULE 7B	20	20	20
21	PRESENCE MODULE 7A	21	21	21
22	N/C	22	22	22
23	N/C	23	23	23
24	BIAS CONTROL MODULE 9	24	24	24
25	LOGIC GND	25	25	25

FM–10S/FMi–703 OVERALL SCHEMATIC SHT. 5 OF 7 (PAGE 2 OF 3)				
MOTHERBOARD AND CONTROLLER MODULE CONTROL BOARD				
25–PIN SUB–D CONNECTOR PIN–OUTS CONTD_				
		DATA	CONTROLLER	CONTROLLER
MOTHERBOARD CONNECTORS		CABLE	CHASSIS	MODULE CONTROL BD
J111	MOTHERBD ”A” LEFT	P111A/P2A	J2A	J2
J111	MOTHERBD ”B” RIGHT	P111B/P102B	J102B	J102
1	PRESENCE MODULE 6A	1	1	1
2	BIAS CONTROL MODULE 6	2	2	2
3	PRESENCE MODULE 6B	3	3	3
4	SELECT MODULE 6	4	4	4
5	PRESENCE MODULE 8A	5	5	5
6	BIAS CONTROL MODULE 8	6	6	6
7	PRESENCE MODULE 8B	7	7	7
8	SELECT MODULE 8	8	8	8
9	TEMP SAMPLE X 5 (IPA REJ LOAD)	9	9	9
10	MODULE FORWARD POWER	10	10	10
11	MODULE TEMPERATURE	11	11	11
12	SPARE	12	12	12
13	N/C	13	13	13
14	PRESENCE MODULE 9B	14	14	14
15	MODULE CURRENT	15	15	15
16	MODULE REFLECTED POWER	16	16	16
17	PRESENCE MODULE 9A	17	17	17
18	PRESENCE MODULE 4A	18	18	18
19	BIAS CONTROL MODULE 4	19	19	19
20	PRESENCE MODULE 4B	20	20	20
21	SELECT MODULE 4	21	21	21
22	PRESENCE MODULE 2A	22	22	22
23	BIAS CONTROL MODULE 2	23	23	23
24	PRESENCE MODULE 2B	24	24	24
25	SELECT MODULE 2	25	25	25

FM–10S/FMi–703 OVERALL SCHEMATIC SHT. 5 OF 7 (PAGE 3 OF 3)			
MOTHERBOARD AND IPA SPLITER REJECT LOAD TEMPERATURE SENSOR BOARD			
4–PIN CONNECTOR PIN–OUTS			
MOTHERBOARD ”A”			TEMP SENSOR BOARD
CONNECTOR	WIRE HARNESS	CIRCUIT FUNCTION	(IPA REJECT LOAD)
J114	P114/P1		J1
1	RED	+12V	1
2	N/C	TEMP SAMPLE (.01V/DEG.C)	2
3	BLACK	TEMP SAMPLE X 5	3
4	SHIELD	GND	4

FM–10S/FMi–703 OVERALL SCHEMATIC SHT. 6 OF 7 (PAGE 1 OF 2)						
8–WAY COMBINER ”A” LEFT						
9–PIN SUB–D CONNECTOR PINOUTS						
TOP COMBINER INPUT CONTROL BOARD		RIBBON	DATA	CONTROL-LER		
9–PIN SUB–D CONNECTOR		CABLE	CABLE	CHASSIS	CONTROL-LER MOD-ULE CON-TROL BD	
J1B	8–WAY COMBINER ”A”	P1	P1AT/P3A	J3A	J3	9–PIN SUB–D CONNECTOR
1	RELAY K4 PIN 2 COIL (–) RETURN	1	1	1	1	MODULE 1 FAULT – GROUND
2	RELAY K3 PIN 2 COIL (–) RETURN	2	2	2	2	MODULE 3 FAULT – GROUND
3	RELAYS K1 THRU K4 PIN 1 COIL (+)	3	3	3	3	DC +12V TO RELAY COILS
4	RELAY K2 PIN 2 COIL (–) RETURN	4	4	4	4	MODULE 5 FAULT – GROUND
5	RELAY K1 PIN 2 COIL (–) RETURN	5	5	5	5	MODULE 7 FAULT – GROUND
6	LOGIC GROUND	6	6	6	6	LOGIC GROUND
7	LOGIC GROUND	7	7	7	7	LOGIC GROUND
8	LOGIC GROUND	8	8	8	8	LOGIC GROUND
9	LOGIC GROUND	9	9	9	9	LOGIC GROUND
BOTTOM COMBINER INPUT CONTROL BOARD		RIBBON	DATA	CONTROL-LER		
9–PIN SUB–D CONNECTOR		CABLE	CABLE	CHASSIS	CONTROL-LER MOD-ULE CON-TROL BD	
J1	8–WAY COMBINER ”A”	P1	P1AB/P4A	J4A	J4	9–PIN SUB–D CONNECTOR
1	RELAY K4 PIN 2 COIL (–) RETURN	1	1	1	1	MODULE 2 FAULT – GROUND
2	RELAY K3 PIN 2 COIL (–) RETURN	2	2	2	2	MODULE 4 FAULT – GROUND
3	RELAYS K1 THRU K4 PIN 1 COIL (+)	3	3	3	3	DC +12V TO RELAY COILS
4	RELAY K2 PIN 2 COIL (–) RETURN	4	4	4	4	MODULE 6 FAULT – GROUND
5	RELAY K1 PIN 2 COIL (–) RETURN	5	5	5	5	MODULE 8 FAULT – GROUND
6	LOGIC GROUND	6	6	6	6	LOGIC GROUND
7	LOGIC GROUND	7	7	7	7	LOGIC GROUND
8	LOGIC GROUND	8	8	8	8	LOGIC GROUND
9	LOGIC GROUND	9	9	9	9	LOGIC GROUND

FM–10S/FMi–703 OVERALL SCHEMATIC SHT. 6 OF 7 (PAGE 2 OF 2)						
8–WAY COMBINER ”B” RIGHT						
9–PIN SUB–D CONNECTOR PINOUTS						
TOP COMBINER INPUT CONTROL BOARD		RIBBON	DATA	CONTROL-LER		
9–PIN SUB–D CONNECTOR		CABLE	CABLE	CHASSIS	CONTROL-LER MOD-ULE CON-TROL BD	
J1	8–WAY COMBINER ”B”	P1	P1BT/ P103B	J103B	J103	9–PIN SUB–D CONNECTOR
1	RELAY K4 PIN 2 COIL (–) RETURN	1	1	1	1	MODULE 15 FAULT – GROUND
2	RELAY K3 PIN 2 COIL (–) RETURN	2	2	2	2	MODULE 13 FAULT – GROUND
3	RELAYS K1 THRU K4 PIN 1 COIL (+)	3	3	3	3	DC +12V TO RELAY COILS
4	RELAY K2 PIN 2 COIL (–) RETURN	4	4	4	4	MODULE 11 FAULT – GROUND
5	RELAY K1 PIN 2 COIL (–) RETURN	5	5	5	5	MODULE 9 FAULT – GROUND
6	LOGIC GROUND	6	6	6	6	LOGIC GROUND
7	LOGIC GROUND	7	7	7	7	LOGIC GROUND
8	LOGIC GROUND	8	8	8	8	LOGIC GROUND
9	LOGIC GROUND	9	9	9	9	LOGIC GROUND
BOTTOM COMBINER INPUT CONTROL BOARD		RIBBON	DATA	CONTROL-LER		
9–PIN SUB–D CONNECTOR		CABLE	CABLE	CHASSIS	CONTROL-LER MOD-ULE CON-TROL BD	
J1B	8–WAY COMBINER ”B”	P1	P1BB/P104 B	J104B	J104	9–PIN SUB–D CONNECTOR
1	RELAY K4 PIN 2 COIL (–) RETURN	1	1	1	1	MODULE 10 FAULT – GROUND
2	RELAY K3 PIN 2 COIL (–) RETURN	2	2	2	2	MODULE 12 FAULT – GROUND
3	RELAYS K1 THRU K4 PIN 1 COIL (+)	3	3	3	3	DC +12V TO RELAY COILS
4	RELAY K2 PIN 2 COIL (–) RETURN	4	4	4	4	MODULE 14 FAULT – GROUND
5	RELAY K1 PIN 2 COIL (–) RETURN	5	5	5	5	MODULE 16 FAULT – GROUND
6	LOGIC GROUND	6	6	6	6	LOGIC GROUND
7	LOGIC GROUND	7	7	7	7	LOGIC GROUND
8	LOGIC GROUND	8	8	8	8	LOGIC GROUND
9	LOGIC GROUND	9	9	9	9	LOGIC GROUND

FM–10S/FMi–703 OVERALL SCHEMATIC SHT. 7 OF 7 (PAGE 1 OF 4)			909–1010–226 / 909–0703–226
P.S. DISTRIBUTION BOARD AND P.S. HARNESS			
CONNECTOR PIN–OUTS			
P.S. DISTRIB. BOARD			5KW POWER SUPPLY
CONNECTOR	DATA CABLE	CIRCUIT FUNCTION	PS# 1 THRU PS# 5
J1 THRU J5	P1/P6 THRU P5/P10		J1
1	1	SENSE + (DC OUT SAMPLE)	1
2	2	VC+ (CONTROL VOLTAGE)	2
3	3	FAULT	3
4	4	VC_GND	4
9	9	LOGIC GND	9
10	10	CURRENT SHARE	10
13	13	P.S. INHIBIT	13
P.S. DISTRIB. BOARD			TEMP SENSOR BOARD
CONNECTOR	WIRE HARNESS	CIRCUIT FUNCTION	(INLET)
J6	P6/P15		J1
1	145	+12V	1
2	N/C	TEMP SAMPLE (.01V/DEG.C)	2
3	146	TEMP SAMPLE X 5	3
4	147	GND	4
P.S. DISTRIB. BOARD			
CONNECTOR	WIRE HARNESS	CIRCUIT FUNCTION	OCR
J8	P8		K1
1	143	OCR CONTROL (+12V)	E3
2	144	LOGIC GND	E4
P.S. DISTRIB. BOARD			
CONNECTOR	WIRE HARNESS	CIRCUIT FUNCTION	5KW POWER SUPPLY
J9	P9		PS# 1 THRU PS# 5
1	RED	SENSE + (DC OUT SAMPLE)	DC OUTPUT BUS +
2	BLACK	VC_GND	DC OUTPUT BUS –

FM–10S/FMi–703 OVERALL SCHEMATIC SHT. 7 OF 7 (PAGE 2 OF 4)			909–1010–226 / 909–0703–226
P.S. DISTRIBUTION BOARD AND P.S. HARNESS			
CONNECTOR PIN–OUTS CONTD_			
P.S. DISTRIB. BOARD			CONTROLLER
CONNECTOR	WIRE HARNESS	CIRCUIT FUNCTION	MODULE CONTROL BOARD
J10	P10/P7A		J7
1	BLACK	VC+	1
2	RED	VC GND	2
3	GREEN	P.S.FAULT 1	3
4	WHITE	LOGIC GND	4
5	BROWN	P.S.INHIBIT	5
6	BLUE	P.S.FAULT 2	6
7	ORANGE	P.S.FAULT 3	7
8	YELLOW	P.S.FAULT 4	8
9	VIOLET	P.S.FAULT 5	9
10	GRAY	TEMP SAMPLE X 5 (INLET)	10
11	PINK	HI/LO AC LINE SENSOR	11
12	TAN	OCR CONTROL (+12V)	12
13	RED/GREEN	+24V	13
14	RED/YELLOW	+48V (DC OUT SAMPLE)	14
15	RED/BLACK	+5V	15
16	WHITE/BLACK	+5V	16
17	WHITE/RED	+5V	17
18	WHITE/GREEN	GND	18
19	WHITE/YELLOW	GND	19
20	WHITE/BLUE	GND	20
21	WHITE/BROWN	GND	21
22	WHITE/ORANGE	–12V	22
23	WHITE/GRAY	–12V	23
24	WHITE/VIOLET	+12V	24
25	BLACK/RED	+12V	25

FM–10S/FMi–703 OVERALL SCHEMATIC SHT. 7 OF 7 (PAGE 3 OF 4)			909–1010–226 / 909–0703–226	
P.S. DISTRIBUTION BOARD AND P.S. HARNESS				
CONNECTOR PIN–OUTS CONTD_				
P.S. DISTRIB. BOARD				LOW VOLTAGE
CONNECTOR	WIRE HARNESS	CIRCUIT FUNCTION	WIRE HARNESS	POWER SUPPLY
J11	P11		P12	J2
1	132	+5V	132	1
2	131	+5V	131	2
3	130	+5V	130	3
4	129	GND	129	4
5	128	GND	128	5
6	127	GND	127	6
7	126	GND	126	7
8	125	+12V	125	8
9	124	+12V	124	9
10	123	GND	123	10
11	122	–12V	122	11
12	121	+24V	N/C	12
			121	13
				LOW VOLTAGE
		CIRCUIT FUNCTION	WIRE HARNESS	POWER SUPPLY
			P13	J1
		GND	136	1
			N/C	2
		AC LINE NEUTRAL	138	3
			N/C	4
		AC LINE PHASE (SWITCHED)	137	5

FM–10S/FMi–703 OVERALL SCHEMATIC SHT. 7 OF 7 (PAGE 4 OF 4)			909–1010–226 / 909–0703–226		
P.S. DISTRIBUTION BOARD AND P.S. HARNESS					
CONNECTOR PIN–OUTS CONTD_					
P.S. DISTRIB. BOARD	DATA CABLE		MOTHERBOARD ”A”/”C’ OR ”B”/”D”		
CONNECTOR	P12/P201A OR	CIRCUIT FUNCTION	DC CONNECTOR BOARD		MOTHER-BOARD
J12 OR J13	P13/P201B		J201	J202	J115
1	1	+12V	1	1	1
2	2	+12V	2	2	2
3	3	N/C	3	4	4
4	4	–12V	4	6	6
5	5	+5V	5	9	9
6	6	+12V	6	3	3
7	7	N/C	7	5	5
8	8	–12V	8	7	7
9	9	–12V	9	8	8
SHELL	SHIELD	CHASSIS GND	CHASSIS GND	10	10
POWER SUPPLY HARNESS		CIRCUIT FUNCTION	AC LINE FAULT IND. BOARD		
CONNECTOR P1	WIRE NO.		J1		
1	240	LOSS OF AC LINE PHASE 1	1		
2	241	LOGIC GND	2		
3			3		
4			4		
5			5		
6			6		

REVISIONS					
REV	DATE	DESCRIPTION	DRAFTER	APPROVED	ECN
1	2-17-03	Created	MSE		
A	2-27-03	Engineering Release	MSE		

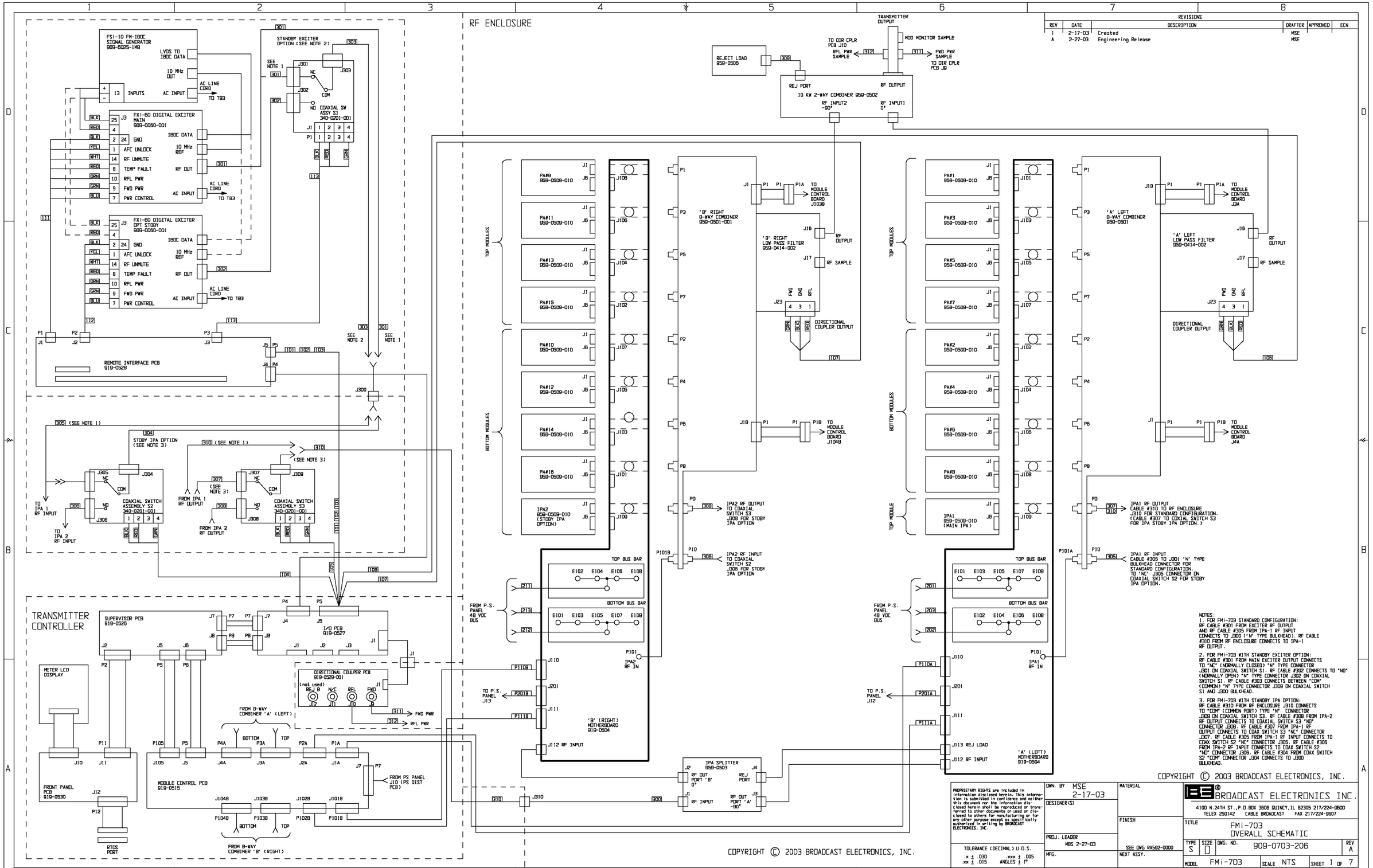

NOTES:
1. FOR FMi-703 STANDARD CONFIGURATION:
RF CABLE #301 FROM EXCITER RF OUTPUT AND RF CABLE #305 FROM IPA-1 RF INPUT CONNECTS TO J300 ('N' TYPE BULKHEAD). RF CABLE #310 FROM RF ENCLOSURE CONNECTS TO IPA-1 RF OUTPUT.

2. FOR FMi-703 WITH STANDBY EXCITER OPTION:
RF CABLE #301 FROM MAIN EXCITER OUTPUT CONNECTS TO "NC" (NORMALLY CLOSED) "N" TYPE CONNECTOR J301 ON COAXIAL SWITCH S1. RF CABLE #302 CONNECTS TO "NO" (NORMALLY OPEN) "N" TYPE CONNECTOR J302 ON COAXIAL SWITCH S1. RF CABLE #303 CONNECTS BETWEEN "COM" (COMMON) "N" TYPE CONNECTOR J303 ON COAXIAL SWITCH S1 AND J300 BULKHEAD.

3. FOR FMi-703 WITH STANDBY IPA OPTION:
RF CABLE #310 FROM RF ENCLOSURE J310 CONNECTS TO "COM" (COMMON PORT) TYPE "N" CONNECTOR J309 ON COAXIAL SWITCH S3. RF CABLE #308 FROM IPA-2 RF OUTPUT CONNECTS TO COAXIAL SWITCH S3 "NO" CONNECTOR J308. RF CABLE #307 FROM IPA-1 RF OUTPUT CONNECTS TO COAX SWITCH S3 "NC" CONNECTOR J307. RF CABLE #305 FROM IPA-1 RF INPUT CONNECTS TO COAX SWITCH S2 "NC" CONNECTOR J305. RF CABLE #306 FROM IPA-2 RF INPUT CONNECTS TO COAX SWITCH S2 "NO" CONNECTOR J306. RF CABLE #304 FROM COAX SWITCH S2 "COM" CONNECTOR J304 CONNECTS TO J300 BULKHEAD.

TOLERANCE (DECIMAL) U.O.S.
.x ± .030 .xxx ± .005
.xx ± .015 ANGLES ± 1°

DWN. BY MSE 2-17-03
DESIGNER(S)
PROJ. LEADER MBS 2-27-03
MFG.
MATERIAL
FINISH
SEE DWG RA502-0000
NEXT ASSY.

BROADCAST ELECTRONICS INC.
4100 N.24TH ST.,P.O.BOX 3606 QUINCY,IL 62305 217/224-9600
TELEX 250142 CABLE BROADCAST FAX 217/224-9607

TITLE FMi-703 OVERALL SCHEMATIC

TYPE	SIZE	DWG. NO.	REV
S	D	909-0703-206	A

MODEL FMi-703 SCALE NTS SHEET 1 OF 7

REVISIONS					
REV	DATE	DESCRIPTION	DRAFTER	APPROVED	ECN
1	2-17-03	Created	MSE		
A	2-27-03	Engineering Release	MSE		

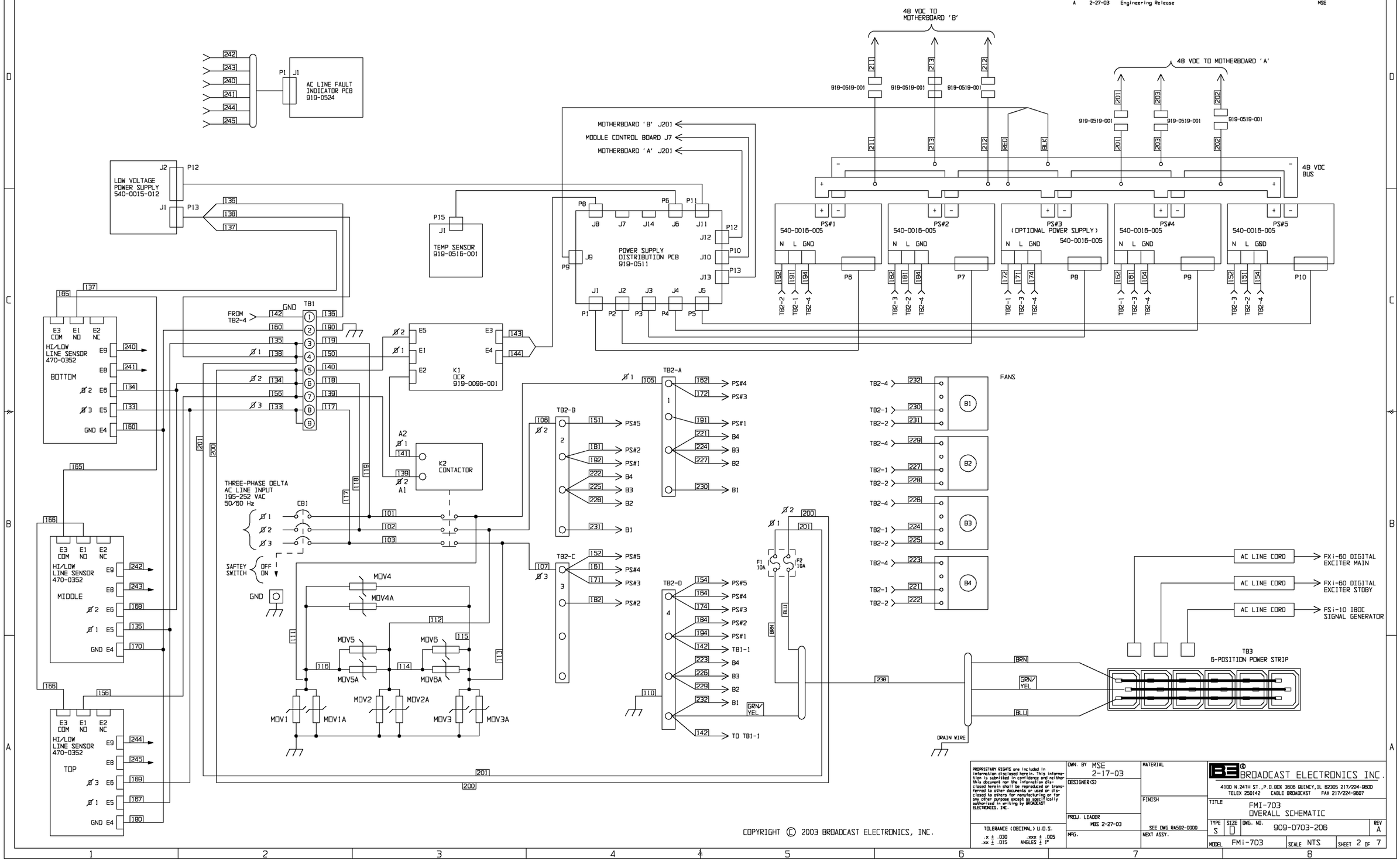

TOLERANCE (DECIMAL) U.O.S.
.x ± .030 .xxx ± .005
.xx ± .015 ANGLES ± 1°

DWN. BY MSE 2-17-03
DESIGNER(S)
PROJ. LEADER MBS 2-27-03
MFG.
MATERIAL
FINISH SEE DWG RA592-0000
NEXT ASSY.

BROADCAST ELECTRONICS INC.
4100 N.24TH ST.,P.O.BOX 3606 QUINCY,IL 62305 217/224-9600
TELEX 250142 CABLE BROADCAST FAX 217/224-9607

TITLE FMI-703 OVERALL SCHEMATIC

TYPE	SIZE	DWG. NO.	REV
S	D	909-0703-206	A

MODEL FMi-703 SCALE NTS SHEET 2 OF 7

REVISIONS					
REV	DATE	DESCRIPTION	DRAFTER	APPROVED	ECN
1	2-17-03	Created			
A	2-27-03	Engineering Release	MSE		

MOTHERBOARD J107 <-> RF MODULE J6

1 GND
2 RF IN
3 RF IN
4 GND
5 GND
6 +5V
7 -12V
8 LOGIC GND
9 LOGIC GND
10 GND
11 GND
12 GND
13 SELECT MOD 7
14 GND
15 VDC E107
16 VDC E107
17 VDC E107
18 PRESENCE MOD 7B
19 PRESENCE MOD 7A
20 GND
21 GND
22 GND
23 +12V
24 RESET
25 BIAS CTL MOD 7
26 FWD PWR
27 RFL PWR
28 TEMP
29 MOD CURRENT
30 SPARE
31 GND
32 GND
33 VDC E107
34 VDC E107
35 VDC E107
36 GND

MOTHERBOARD J109 <-> RF MODULE J6

1 GND
2 RF IN
3 RF IN
4 GND
5 GND
6 +5V
7 -12V
8 LOGIC GND
9 LOGIC GND
10 GND
11 GND
12 GND
13 SELECT MOD 9
14 GND
15 VDC E109
16 VDC E109
17 VDC E109
18 PRESENCE MOD 9B
19 PRESENCE MOD 9A
20 GND
21 GND
22 GND
23 +12V
24 RESET
25 BIAS CTL MOD 9
26 FWD PWR
27 RFL PWR
28 TEMP
29 MOD CURRENT
30 SPARE
31 GND
32 GND
33 VDC E109
34 VDC E109
35 VDC E109
36 GND

MOTHERBOARD J101 <-> RF MODULE J6

1 GND
2 RF IN
3 RF IN
4 GND
5 GND
6 +5V
7 -12V
8 LOGIC GND
9 LOGIC GND
10 GND
11 GND
12 GND
13 SELECT MOD 1
14 GND
15 VDC E101
16 VDC E101
17 VDC E101
18 PRESENCE MOD 1B
19 PRESENCE MOD 1A
20 GND
21 GND
22 GND
23 +12V
24 RESET
25 BIAS CTL MOD 1
26 FWD PWR
27 RFL PWR
28 TEMP
29 MOD CURRENT
30 SPARE
31 GND
32 GND
33 VDC E101
34 VDC E101
35 VDC E101
36 GND

MOTHERBOARD J103 <-> RF MODULE J6

1 GND
2 RF IN
3 RF IN
4 GND
5 GND
6 +5V
7 -12V
8 LOGIC GND
9 LOGIC GND
10 GND
11 GND
12 GND
13 SELECT MOD 3
14 GND
15 VDC E103
16 VDC E103
17 VDC E103
18 PRESENCE MOD 3B
19 PRESENCE MOD 3A
20 GND
21 GND
22 GND
23 +12V
24 RESET
25 BIAS CTL MOD 3
26 FWD PWR
27 RFL PWR
28 TEMP
29 MOD CURRENT
30 SPARE
31 GND
32 GND
33 VDC E103
34 VDC E103
35 VDC E103
36 GND

MOTHERBOARD J105 <-> RF MODULE J6

1 GND
2 RF IN
3 RF IN
4 GND
5 GND
6 +5V
7 -12V
8 LOGIC GND
9 LOGIC GND
10 GND
11 GND
12 GND
13 SELECT MOD 5
14 GND
15 VDC E105
16 VDC E105
17 VDC E105
18 PRESENCE MOD 5B
19 PRESENCE MOD 5A
20 GND
21 GND
22 GND
23 +12V
24 RESET
25 BIAS CTL MOD 5
26 FWD PWR
27 RFL PWR
28 TEMP
29 MOD CURRENT
30 SPARE
31 GND
32 GND
33 VDC E105
34 VDC E105
35 VDC E105
36 GND

MOTHERBOARD J102 <-> RF MODULE J6

1 GND
2 RF IN
3 RF IN
4 GND
5 GND
6 +5V
7 -12V
8 LOGIC GND
9 LOGIC GND
10 GND
11 GND
12 GND
13 SELECT MOD 2
14 GND
15 VDC E102
16 VDC E102
17 VDC E102
18 PRESENCE MOD 2B
19 PRESENCE MOD 2A
20 GND
21 GND
22 GND
23 +12V
24 RESET
25 BIAS CTL MOD 2
26 FWD PWR
27 RFL PWR
28 TEMP
29 MOD CURRENT
30 SPARE
31 GND
32 GND
33 VDC E102
34 VDC E102
35 VDC E102
36 GND

MOTHERBOARD J104 <-> RF MODULE J6

1 GND
2 RF IN
3 RF IN
4 GND
5 GND
6 +5V
7 -12V
8 LOGIC GND
9 LOGIC GND
10 GND
11 GND
12 GND
13 SELECT MOD 4
14 GND
15 VDC E104
16 VDC E104
17 VDC E104
18 PRESENCE MOD 4B
19 PRESENCE MOD 4A
20 GND
21 GND
22 GND
23 +12V
24 RESET
25 BIAS CTL MOD 4
26 FWD PWR
27 RFL PWR
28 TEMP
29 MOD CURRENT
30 SPARE
31 GND
32 GND
33 VDC E104
34 VDC E104
35 VDC E104
36 GND

MOTHERBOARD J106 <-> RF MODULE J6

1 GND
2 RF IN
3 RF IN
4 GND
5 GND
6 +5V
7 -12V
8 LOGIC GND
9 LOGIC GND
10 GND
11 GND
12 GND
13 SELECT MOD 6
14 GND
15 VDC E106
16 VDC E106
17 VDC E106
18 PRESENCE MOD 6B
19 PRESENCE MOD 6A
20 GND
21 GND
22 GND
23 +12V
24 RESET
25 BIAS CTL MOD 6
26 FWD PWR
27 RFL PWR
28 TEMP
29 MOD CURRENT
30 SPARE
31 GND
32 GND
33 VDC E106
34 VDC E106
35 VDC E106
36 GND

MOTHERBOARD J108 <-> RF MODULE J6

1 GND
2 RF IN
3 RF IN
4 GND
5 GND
6 +5V
7 -12V
8 LOGIC GND
9 LOGIC GND
10 GND
11 GND
12 GNB
13 SELECT MOD 8
14 GND
15 VDC E108
16 VDC E108
17 VDC E108
18 PRESENCE MOD 8B
19 PRESENCE MOD 8A
20 GND
21 GND
22 GND
23 +12V
24 RESET
25 BIAS CTL MOD 8
26 FWD PWR
27 RFL PWR
28 TEMP
29 MOD CURRENT
30 SPARE
31 GND
32 GND
33 VDC E108
34 VDC E108
35 VDC E108
36 GND

MOTHERBOARD J110 <-> CONTROLLER P1A

1 SELECT MOD 9
2 LOGIC GND
3 LOGIC GND
4 RESET
5 LOGIC GND
6 BIAS CTL MOD 7
7 SELECT MOD 7
8 BIAS CTL MOD 5
9 SELECT MOD 5
10 PRESENCE MOD 3A
11 PRESENCE MOD 3B
12 SELECT MOD 3
13 PRESENCE MOD 1A
14 BIAS CTL MOD 1
15 SELECT MOD 1
16 BIAS CTL MOD 3
17 PRESENCE MOD 1B
18 PRESENCE MOD 5B
19 PRESENCE MOD 5A
20 PRESENCE MOD 7B
21 PRESENCE MOD 7A
22 N/C
23 N/C
24 BIAS CTL MOD 9
25 LOGIC GND

MOTHERBOARD J111 <-> CONTROLLER P2A

1 PRESENCE MOD 6A
2 BIAS CTL MOD 6
3 PRESENCE MOD 6B
4 SELECT MOD 6
5 PRESENCE MOD 8A
6 BIAS CTL MOD 8
7 PRESENCE MOD 8B
8 SELECT MOD 8
9 TEMP SAMPLE X10
10 FWD PWR
11 TEMP
12 SPARE
13 N/C
14 PRESENCE MOD 9B
15 MOD CURRENT
16 RFL PWR
17 PRESENCE MOD 9A
18 PRESENCE MOD 4A
19 BIAS CTL MOD 4
20 PRESENCE MOD 4B
21 SELECT MOD 4
22 PRESENCE MOD 2A
23 BIAS CTL MOD 2
24 PRESENCE MOD 2B
25 SELECT MOD 2

P.S DIST PCB J10 <-> CONTROLLER J7

1 VC+
2 VC GND
3 FAULT 1
4 LOGIC GND
5 INHIBIT
6 FAULT 2
7 FAULT 3
8 FAULT 4
9 FAULT 5
10 TEMP SAMPLE
11 H/L AC LINE SENSOR
12 OCR CONTROL
13 +24V
14 +48V SAMPLE
15 +5V
16 +5V
17 +5V
18 GND
19 GND
20 GND
21 GND
22 -12V
23 -12V
24 +12V
25 +12V

P.S DIST PCB J12/J13 <-> MOTHEBOARD A & B J201/J115

1 +12V
2 +12V
3 +12V
4 N/C
5 N/C
6 -12V
7 -12V
8 -12V
9 +15V
10 CHASSIS GND

TOLERANCE (DECIMAL) U.O.S.
.x ± .030 .xxx ± .005
.xx ± .015 ANGLES ± 1°

DWN. BY MSE 2-17-03
DESIGNER(S)
PROJ. LEADER MBS 2-27-03
MFG.
MATERIAL
FINISH
SEE DWG RA502-0000
NEXT ASSY.

BROADCAST ELECTRONICS INC.
4100 N.24TH ST.,P.O.BOX 3606 QUINCY,IL 62305 217/224-9600
TELEX 250142 CABLE BROADCAST FAX 217/224-9607

TITLE FMi-703 OVERALL SCHEMATIC

TYPE	SIZE	DWG. NO.	REV
S	D	909-0703-206	A

MODEL FMi-703 SCALE NTS SHEET 3 OF 7

FMi–703 OVERALL SCHEMATIC SHT. 4 OF 7 (PAGE 1)			CONTROLLER I/O BOARD AND WIRE HARNESS				37–PIN SUB–D CONNECTOR PIN–OUTS				
37–PIN			25–PIN			MAIN	STAND-BY	EXC	IPA IN	IPA OUT	LOW
CON-TROL-LER	WIRE	CIRCUIT FUNCTION	CON-TROL-LER	CON-TROL-LER	WIRE	FXI–60	FXI–60	RELAY	RELAY	RELAY	PASS
I/O BOARD	HARNESS		RMTE I/F BD	RMTE I/F BD	HAR-NESS	EXCIT-ER	EXCIT-ER	S1	S2	S3	FILTER
J5 ——— P5	WIRE NO.		J5 ——— P5		WIRE NO.	J3	J3	J1 ——— P1	J1 ——— P1	J1 ——— P1	J23
1	102–WHT	STBY EXC RF UNMUTE	12	J2–3	P2/112–WHT		14				
2	102–YEL	STBY EXC AFC UNLOCK	13	J2–4	P2/112–YEL		1				
3	104–RED	IPA IN RELAY CONTROL							2		
4	105–RED	IPA OUT RELAY CONTROL								2	
5	103–RED	EXC OUT RELAY CON-TROL	20	J3–2	P3/113–RED			2			
6	103 GRN	EXC RELAY TALLY	21	J3–3	P3/113–GRN			4			
7	104–GRN	IPA IN RELAY TALLY							4		
8	JUMPER	INTERLOCK RETURN									
9	101–RED	MAIN EXC OVER TEMP	5	J1–5	P1/111–RED	8					
10	101–YEL	MAIN EXC AFC UNLOCK	4	J1–4	P1/111–YEL	1					
11	105–GRN	IPA OUT RELAY TALLY								4	
12	101–BLU	MAIN EXC PWR CON-TROL	7	J1–7	P1/111–BLU	7					
13	102–BLU	STBY EXC PWR CON-TROL	16	J2–7	P2/112–BLU		7				
14	101–GRN	MAIN EXC FWD PWR	1	J1–4	P1/111–GRN	9					
15	101–ORN	MAIN EXC RFL PWR	2	J1–2	P1/111–ORN	10					
16	101–WHT	MAIN EXC RF UNMUTE	3	J1–3	P1/111–WHT	14					
17	106–GRN	FILTER A (1) FWD PWR									4
18	106–RED	FILTER A (1) RFL PWR									1
19	107–GRN	FILTER B (2) FWD PWR									4
20	107–RED	FILTER B (2) RFL PWR									1
21											
22											
23											
24											
25	JUMPER	INTERLOCK OUT									
26	104–BLK	+24V' TO IPA IN RELAY							1		

27	105–BLK	+24V' TO IPA OUT RELAY								1	
28	103–BLK	+24V' TO EXC RELAY	19	J3–1	P3/113–BLK			1			
29	102–GRN	STBY EXC FWD PWR	10	J2–1	P2/112–GRN		9				
30	102–ORN	STBY EXC RFL PWR	11	J2–2	P2/112–ORN		10				
31	102–RED	STBY EXC OVER TEMP	14	J2–5	P2/111–RED		8				
32	101–BLK	GND TO MAIN EXC	6	J1–6	P1/111–BLK	2, 24					
33	102–BLK	GND TO STBY EXC	15	J2–6	P2/112–BLK		2, 24				
34	106–BLK	FILTER A (1) GND RETURN									3
35	107–BLK	FILTER B (2) GND RETURN									3
36											
37											

FM–10S/FMi–703 OVERALL SCHEMATIC SHT. 5 OF 7 (PAGE 1 OF 3)				
MOTHERBOARD AND CONTROLLER MODULE CONTROL BOARD				
25–PIN SUB–D CONNECTOR PIN–OUTS				
		DATA	CONTROLLER	CONTROLLER
MOTHERBOARD CONNECTORS		CABLE	CHASSIS	MODULE CONTROL BD
J110	MOTHERBD ”A” LEFT	P110A/P1A	J1A	J1
J110	MOTHERBD ”B” RIGHT	P110B/P101B	J101B	J101
1	SELECT MODULE 9	1	1	1
2	LOGIC GND	2	2	2
3	LOGIC GND	3	3	3
4	RESET	4	4	4
5	LOGIC GND	5	5	5
6	BIAS CONTROL MODULE 7	6	6	6
7	SELECT MODULE 7	7	7	7
8	BIAS CONTROL MODULE 5	8	8	8
9	SELECT MODULE 5	9	9	9
10	PRESENCE MODULE 3A	10	10	10
11	PRESENCE MODULE 3B	11	11	11
12	SELECT MODULE 3	12	12	12
13	PRESENCE MODULE 1A	13	13	13
14	BIAS CONTROL MODULE 1	14	14	14
15	SELECT MODULE 1	15	15	15
16	BIAS CONTROL MODULE 3	16	16	16
17	PRESENCE MODULE 1B	17	17	17
18	PRESENCE MODULE 5B	18	18	18
19	PRESENCE MODULE 5A	19	19	19
20	PRESENCE MODULE 7B	20	20	20
21	PRESENCE MODULE 7A	21	21	21
22	N/C	22	22	22
23	N/C	23	23	23
24	BIAS CONTROL MODULE 9	24	24	24
25	LOGIC GND	25	25	25

FM–10S/FMi–703 OVERALL SCHEMATIC SHT. 5 OF 7 (PAGE 2 OF 3)				
MOTHERBOARD AND CONTROLLER MODULE CONTROL BOARD				
25–PIN SUB–D CONNECTOR PIN–OUTS CONTD_				
		DATA	CONTROLLER	CONTROLLER
MOTHERBOARD CONNECTORS		CABLE	CHASSIS	MODULE CONTROL BD
J111	MOTHERBD ”A” LEFT	P111A/P2A	J2A	J2
J111	MOTHERBD ”B” RIGHT	P111B/P102B	J102B	J102
1	PRESENCE MODULE 6A	1	1	1
2	BIAS CONTROL MODULE 6	2	2	2
3	PRESENCE MODULE 6B	3	3	3
4	SELECT MODULE 6	4	4	4
5	PRESENCE MODULE 8A	5	5	5
6	BIAS CONTROL MODULE 8	6	6	6
7	PRESENCE MODULE 8B	7	7	7
8	SELECT MODULE 8	8	8	8
9	TEMP SAMPLE X 5 (IPA REJ LOAD)	9	9	9
10	MODULE FORWARD POWER	10	10	10
11	MODULE TEMPERATURE	11	11	11
12	SPARE	12	12	12
13	N/C	13	13	13
14	PRESENCE MODULE 9B	14	14	14
15	MODULE CURRENT	15	15	15
16	MODULE REFLECTED POWER	16	16	16
17	PRESENCE MODULE 9A	17	17	17
18	PRESENCE MODULE 4A	18	18	18
19	BIAS CONTROL MODULE 4	19	19	19
20	PRESENCE MODULE 4B	20	20	20
21	SELECT MODULE 4	21	21	21
22	PRESENCE MODULE 2A	22	22	22
23	BIAS CONTROL MODULE 2	23	23	23
24	PRESENCE MODULE 2B	24	24	24
25	SELECT MODULE 2	25	25	25

FM–10S/FMi–703 OVERALL SCHEMATIC SHT. 5 OF 7 (PAGE 3 OF 3)			
MOTHERBOARD AND IPA SPLITER REJECT LOAD TEMPERATURE SENSOR BOARD			
4–PIN CONNECTOR PIN–OUTS			
MOTHERBOARD ”A”			TEMP SENSOR BOARD
CONNECTOR	WIRE HARNESS	CIRCUIT FUNCTION	(IPA REJECT LOAD)
J114	P114/P1		J1
1	RED	+12V	1
2	N/C	TEMP SAMPLE (.01V/DEG.C)	2
3	BLACK	TEMP SAMPLE X 5	3
4	SHIELD	GND	4

FM–10S/FMi–703 OVERALL SCHEMATIC SHT. 6 OF 7 (PAGE 1 OF 2)						
8–WAY COMBINER ”A” LEFT						
9–PIN SUB–D CONNECTOR PINOUTS						
TOP COMBINER INPUT CONTROL BOARD		RIBBON	DATA	CONTROL-LER		
9–PIN SUB–D CONNECTOR		CABLE	CABLE	CHASSIS	CONTROL-LER MOD-ULE CON-TROL BD	
J1B	8–WAY COMBINER ”A”	P1	P1AT/P3A	J3A	J3	9–PIN SUB–D CONNECTOR
1	RELAY K4 PIN 2 COIL (–) RETURN	1	1	1	1	MODULE 1 FAULT – GROUND
2	RELAY K3 PIN 2 COIL (–) RETURN	2	2	2	2	MODULE 3 FAULT – GROUND
3	RELAYS K1 THRU K4 PIN 1 COIL (+)	3	3	3	3	DC +12V TO RELAY COILS
4	RELAY K2 PIN 2 COIL (–) RETURN	4	4	4	4	MODULE 5 FAULT – GROUND
5	RELAY K1 PIN 2 COIL (–) RETURN	5	5	5	5	MODULE 7 FAULT – GROUND
6	LOGIC GROUND	6	6	6	6	LOGIC GROUND
7	LOGIC GROUND	7	7	7	7	LOGIC GROUND
8	LOGIC GROUND	8	8	8	8	LOGIC GROUND
9	LOGIC GROUND	9	9	9	9	LOGIC GROUND
BOTTOM COMBINER INPUT CONTROL BOARD		RIBBON	DATA	CONTROL-LER		
9–PIN SUB–D CONNECTOR		CABLE	CABLE	CHASSIS	CONTROL-LER MOD-ULE CON-TROL BD	
J1	8–WAY COMBINER ”A”	P1	P1AB/P4A	J4A	J4	9–PIN SUB–D CONNECTOR
1	RELAY K4 PIN 2 COIL (–) RETURN	1	1	1	1	MODULE 2 FAULT – GROUND
2	RELAY K3 PIN 2 COIL (–) RETURN	2	2	2	2	MODULE 4 FAULT – GROUND
3	RELAYS K1 THRU K4 PIN 1 COIL (+)	3	3	3	3	DC +12V TO RELAY COILS
4	RELAY K2 PIN 2 COIL (–) RETURN	4	4	4	4	MODULE 6 FAULT – GROUND
5	RELAY K1 PIN 2 COIL (–) RETURN	5	5	5	5	MODULE 8 FAULT – GROUND
6	LOGIC GROUND	6	6	6	6	LOGIC GROUND
7	LOGIC GROUND	7	7	7	7	LOGIC GROUND
8	LOGIC GROUND	8	8	8	8	LOGIC GROUND
9	LOGIC GROUND	9	9	9	9	LOGIC GROUND

FM–10S/FMi–703 OVERALL SCHEMATIC SHT. 6 OF 7 (PAGE 2 OF 2)						
8–WAY COMBINER ”B” RIGHT						
9–PIN SUB–D CONNECTOR PINOUTS						
TOP COMBINER INPUT CONTROL BOARD		RIBBON	DATA	CONTROL-LER		
9–PIN SUB–D CONNECTOR		CABLE	CABLE	CHASSIS	CONTROL-LER MOD-ULE CON-TROL BD	
J1	8–WAY COMBINER ”B”	P1	P1BT/ P103B	J103B	J103	9–PIN SUB–D CONNECTOR
1	RELAY K4 PIN 2 COIL (–) RETURN	1	1	1	1	MODULE 15 FAULT – GROUND
2	RELAY K3 PIN 2 COIL (–) RETURN	2	2	2	2	MODULE 13 FAULT – GROUND
3	RELAYS K1 THRU K4 PIN 1 COIL (+)	3	3	3	3	DC +12V TO RELAY COILS
4	RELAY K2 PIN 2 COIL (–) RETURN	4	4	4	4	MODULE 11 FAULT – GROUND
5	RELAY K1 PIN 2 COIL (–) RETURN	5	5	5	5	MODULE 9 FAULT – GROUND
6	LOGIC GROUND	6	6	6	6	LOGIC GROUND
7	LOGIC GROUND	7	7	7	7	LOGIC GROUND
8	LOGIC GROUND	8	8	8	8	LOGIC GROUND
9	LOGIC GROUND	9	9	9	9	LOGIC GROUND
BOTTOM COMBINER INPUT CONTROL BOARD		RIBBON	DATA	CONTROL-LER		
9–PIN SUB–D CONNECTOR		CABLE	CABLE	CHASSIS	CONTROL-LER MOD-ULE CON-TROL BD	
J1B	8–WAY COMBINER ”B”	P1	P1BB/P104 B	J104B	J104	9–PIN SUB–D CONNECTOR
1	RELAY K4 PIN 2 COIL (–) RETURN	1	1	1	1	MODULE 10 FAULT – GROUND
2	RELAY K3 PIN 2 COIL (–) RETURN	2	2	2	2	MODULE 12 FAULT – GROUND
3	RELAYS K1 THRU K4 PIN 1 COIL (+)	3	3	3	3	DC +12V TO RELAY COILS
4	RELAY K2 PIN 2 COIL (–) RETURN	4	4	4	4	MODULE 14 FAULT – GROUND
5	RELAY K1 PIN 2 COIL (–) RETURN	5	5	5	5	MODULE 16 FAULT – GROUND
6	LOGIC GROUND	6	6	6	6	LOGIC GROUND
7	LOGIC GROUND	7	7	7	7	LOGIC GROUND
8	LOGIC GROUND	8	8	8	8	LOGIC GROUND
9	LOGIC GROUND	9	9	9	9	LOGIC GROUND

FM–10S/FMi–703 OVERALL SCHEMATIC SHT. 7 OF 7 (PAGE 1 OF 4)			909–1010–206 / 909–0703–206
P.S. DISTRIBUTION BOARD AND P.S. HARNESS			
CONNECTOR PIN–OUTS			
P.S. DISTRIB. BOARD			5KW POWER SUPPLY
CONNECTOR	DATA CABLE	CIRCUIT FUNCTION	PS# 1 THRU PS# 5
J1 THRU J5	P1/P6 THRU P5/P10		J1
1	1	SENSE + (DC OUT SAMPLE)	1
2	2	VC+ (CONTROL VOLTAGE)	2
3	3	FAULT	3
4	4	VC_GND	4
9	9	LOGIC GND	9
10	10	CURRENT SHARE	10
13	13	P.S. INHIBIT	13
P.S. DISTRIB. BOARD			TEMP SENSOR BOARD
	¿	¿	¿
CONNECTOR	WIRE HARNESS	CIRCUIT FUNCTION	(INLET)
J6	P6/P15		J1
1	145	+12V	1
2	N/C	TEMP SAMPLE (.01V/DEG.C)	2
3	146	TEMP SAMPLE X 5	3
4	147	GND	4
P.S. DISTRIB. BOARD			
CONNECTOR	WIRE HARNESS	CIRCUIT FUNCTION	OCR
J8	P8		K1
1	143	OCR CONTROL (+12V)	E3
2	144	LOGIC GND	E4
P.S. DISTRIB. BOARD			
CONNECTOR	WIRE HARNESS	CIRCUIT FUNCTION	5KW POWER SUPPLY
J9	P9		PS# 1 THRU PS# 5
1	RED	SENSE + (DC OUT SAMPLE)	DC OUTPUT BUS +
2	BLACK	VC_GND	DC OUTPUT BUS –

FM–10S/FMi–703 OVERALL SCHEMATIC SHT. 7 OF 7 (PAGE 2 OF 4)			909–1010–206 / 909–0703–206
P.S. DISTRIBUTION BOARD AND P.S. HARNESS			
CONNECTOR PIN–OUTS CONTD_			
P.S. DISTRIB. BOARD			CONTROLLER
CONNECTOR	WIRE HARNESS	CIRCUIT FUNCTION	MODULE CONTROL BOARD
J10	P10/P7A		J7
1	BLACK	VC+	1
2	RED	VC GND	2
3	GREEN	P.S.FAULT 1	3
4	WHITE	LOGIC GND	4
5	BROWN	P.S.INHIBIT	5
6	BLUE	P.S.FAULT 2	6
7	ORANGE	P.S.FAULT 3	7
8	YELLOW	P.S.FAULT 4	8
9	VIOLET	P.S.FAULT 5	9
10	GRAY	TEMP SAMPLE X 5 (INLET)	10
11	PINK	HI/LO AC LINE SENSOR	11
12	TAN	OCR CONTROL (+12V)	12
13	RED/GREEN	+24V	13
14	RED/YELLOW	+48V (DC OUT SAMPLE)	14
15	RED/BLACK	+5V	15
16	WHITE/BLACK	+5V	16
17	WHITE/RED	+5V	17
18	WHITE/GREEN	GND	18
19	WHITE/YELLOW	GND	19
20	WHITE/BLUE	GND	20
21	WHITE/BROWN	GND	21
22	WHITE/ORANGE	–12V	22
23	WHITE/GRAY	–12V	23
24	WHITE/VIOLET	+12V	24
25	BLACK/RED	+12V	25

FM–10S/FMi–703 OVERALL SCHEMATIC SHT. 7 OF 7 (PAGE 3 OF 4)			909–1010–206 / 909–0703–206	
P.S. DISTRIBUTION BOARD AND P.S. HARNESS				
CONNECTOR PIN–OUTS CONTD_				
P.S. DISTRIB. BOARD				LOW VOLTAGE
CONNECTOR	WIRE HARNESS	CIRCUIT FUNCTION	WIRE HARNESS	POWER SUPPLY
J11	P11		P12	J2
1	132	+5V	132	1
2	131	+5V	131	2
3	130	+5V	130	3
4	129	GND	129	4
5	128	GND	128	5
6	127	GND	127	6
7	126	GND	126	7
8	125	+12V	125	8
9	124	+12V	124	9
10	123	GND	123	10
11	122	–12V	122	11
12	121	+24V	N/C	12
			121	13
				LOW VOLTAGE
		CIRCUIT FUNCTION	WIRE HARNESS	POWER SUPPLY
			P13	J1
		GND	136	1
			N/C	2
		AC LINE PHASE 1	138	3
			N/C	4
		AC LINE PHASE 2 (SWITCHED)	137	5

FM–10S/FMi–703 OVERALL SCHEMATIC SHT. 7 OF 7 (PAGE 4 OF 4)			909–1010–206 / 909–0703–206		
P.S. DISTRIBUTION BOARD AND P.S. HARNESS					
CONNECTOR PIN–OUTS CONTD_					
P.S. DISTRIB. BOARD	DATA CABLE		MOTHERBOARD ”A”/”C’ OR ”B”/”D”		
CONNECTOR	P12/P201A OR	CIRCUIT FUNCTION	DC CONNECTOR BOARD		MOTHER-BOARD
	¿	¿	¿	¿	¿
J12 OR J13	P13/P201B		J201	J202	J115
1	1	+12V	1	1	1
2	2	+12V	2	2	2
3	3	N/C	3	4	4
4	4	–12V	4	6	6
5	5	+5V	5	9	9
6	6	+12V	6	3	3
7	7	N/C	7	5	5
8	8	–12V	8	7	7
9	9	–12V	9	8	8
SHELL	SHIELD	CHASSIS GND	CHASSIS GND	10	10
POWER SUPPLY HARNESS		CIRCUIT FUNCTION	AC LINE FAULT IND. BOARD		
CONNECTOR P1	WIRE NO.		J1		
1	242	LOSS OF AC LINE PHASE 1–2	1		
2	243	LOGIC GND	2		
3	240	LOSS OF AC LINE PHASE 2–3	3		
4	241	LOGIC GND	4		
5	244	LOSS OF AC LINE PHASE 3–1	5		
6	245	LOGIC GND	6		

REVISIONS					
REV	DATE	DESCRIPTION	DRAFTER	APPROVED	ECN
A	11-04-03	Engineering Release	MSE		

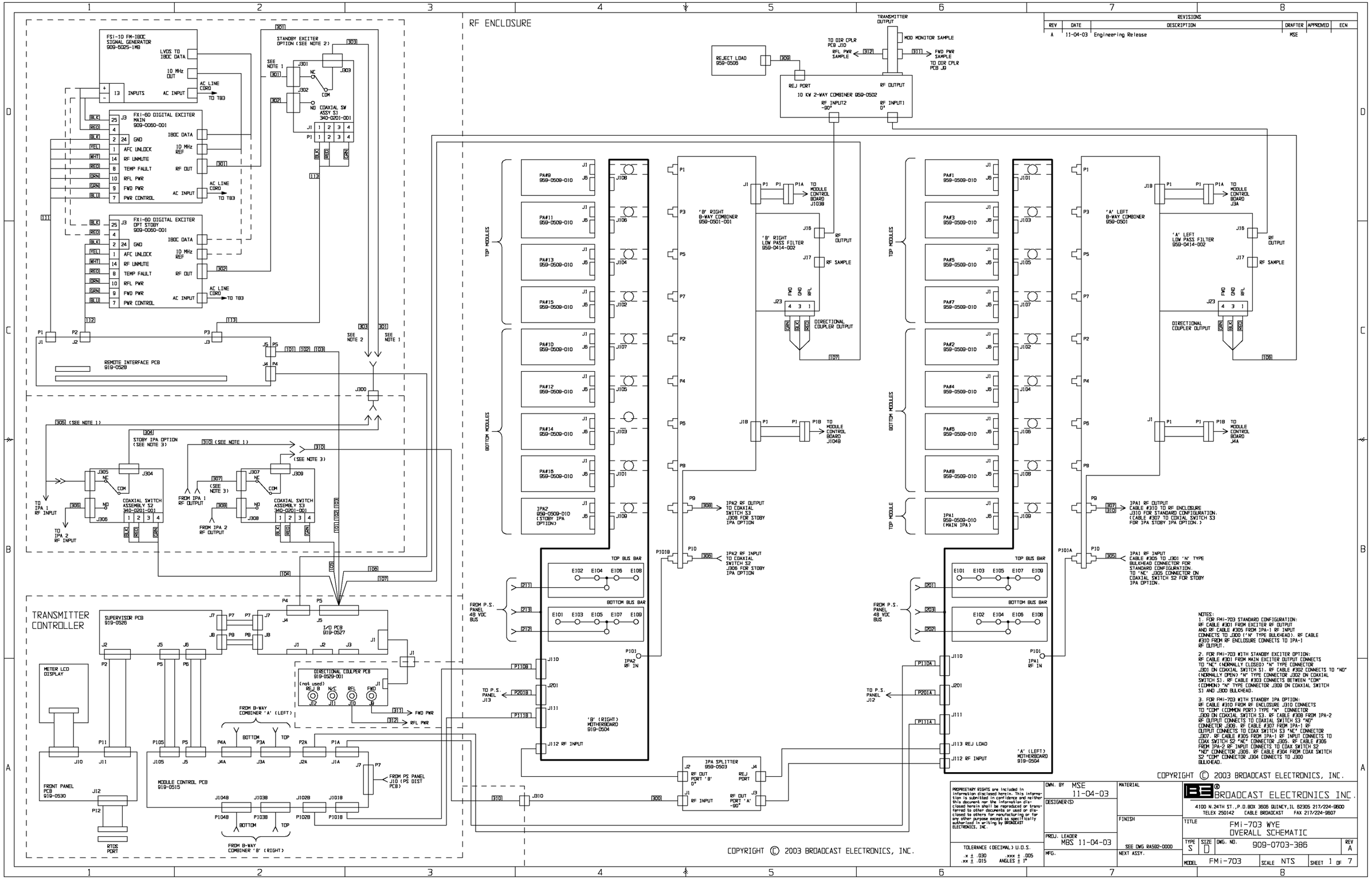

NOTES:
1. FOR FMi-703 STANDARD CONFIGURATION:
RF CABLE #301 FROM EXCITER RF OUTPUT AND RF CABLE #305 FROM IPA-1 RF INPUT CONNECTS TO J300 ('N' TYPE BULKHEAD). RF CABLE #310 FROM RF ENCLOSURE CONNECTS TO IPA-1 RF OUTPUT.

2. FOR FMi-703 WITH STANDBY EXCITER OPTION:
RF CABLE #301 FROM MAIN EXCITER OUTPUT CONNECTS TO "NC" (NORMALLY CLOSED) "N" TYPE CONNECTOR J301 ON COAXIAL SWITCH S1. RF CABLE #302 CONNECTS TO "NO" (NORMALLY OPEN) "N" TYPE CONNECTOR J302 ON COAXIAL SWITCH S1. RF CABLE #303 CONNECTS BETWEEN "COM" (COMMON) "N" TYPE CONNECTOR J303 ON COAXIAL SWITCH S1 AND J300 BULKHEAD.

3. FOR FMi-703 WITH STANDBY IPA OPTION:
RF CABLE #310 FROM RF ENCLOSURE J310 CONNECTS TO "COM" (COMMON PORT) TYPE "N" CONNECTOR J309 ON COAXIAL SWITCH S3. RF CABLE #308 FROM IPA-2 RF OUTPUT CONNECTS TO COAXIAL SWITCH S3 "NO" CONNECTOR J308. RF CABLE #307 FROM IPA-1 RF OUTPUT CONNECTS TO COAX SWITCH S3 "NC" CONNECTOR J307. RF CABLE #305 FROM IPA-1 RF INPUT CONNECTS TO COAX SWITCH S2 "NC" CONNECTOR J305. RF CABLE #306 FROM IPA-2 RF INPUT CONNECTS TO COAX SWITCH S2 "NO" CONNECTOR J306. RF CABLE #304 FROM COAX SWITCH S2 "COM" CONNECTOR J304 CONNECTS TO J300 BULKHEAD.

TOLERANCE (DECIMAL) U.O.S.
.x ± .030 .xxx ± .005
.xx ± .015 ANGLES ± 1°

DWN. BY	MSE 11-04-03	MATERIAL
DESIGNER(S)		FINISH
PROJ. LEADER	MBS 11-04-03	SEE DWG RA502-0000
MFG.		NEXT ASSY.

BROADCAST ELECTRONICS INC.
4100 N.24TH ST.,P.O.BOX 3606 QUINCY,IL 62305 217/224-9600
TELEX 250142 CABLE BROADCAST FAX 217/224-9607

TITLE: FMi-703 WYE OVERALL SCHEMATIC

TYPE	SIZE	DWG. NO.	REV
S	D	909-0703-386	A

MODEL: FMi-703 SCALE: NTS SHEET 1 OF 7

REVISIONS					
REV	DATE	DESCRIPTION	DRAFTER	APPROVED	ECN
A	11-04-03	Engineering Release	MSE		

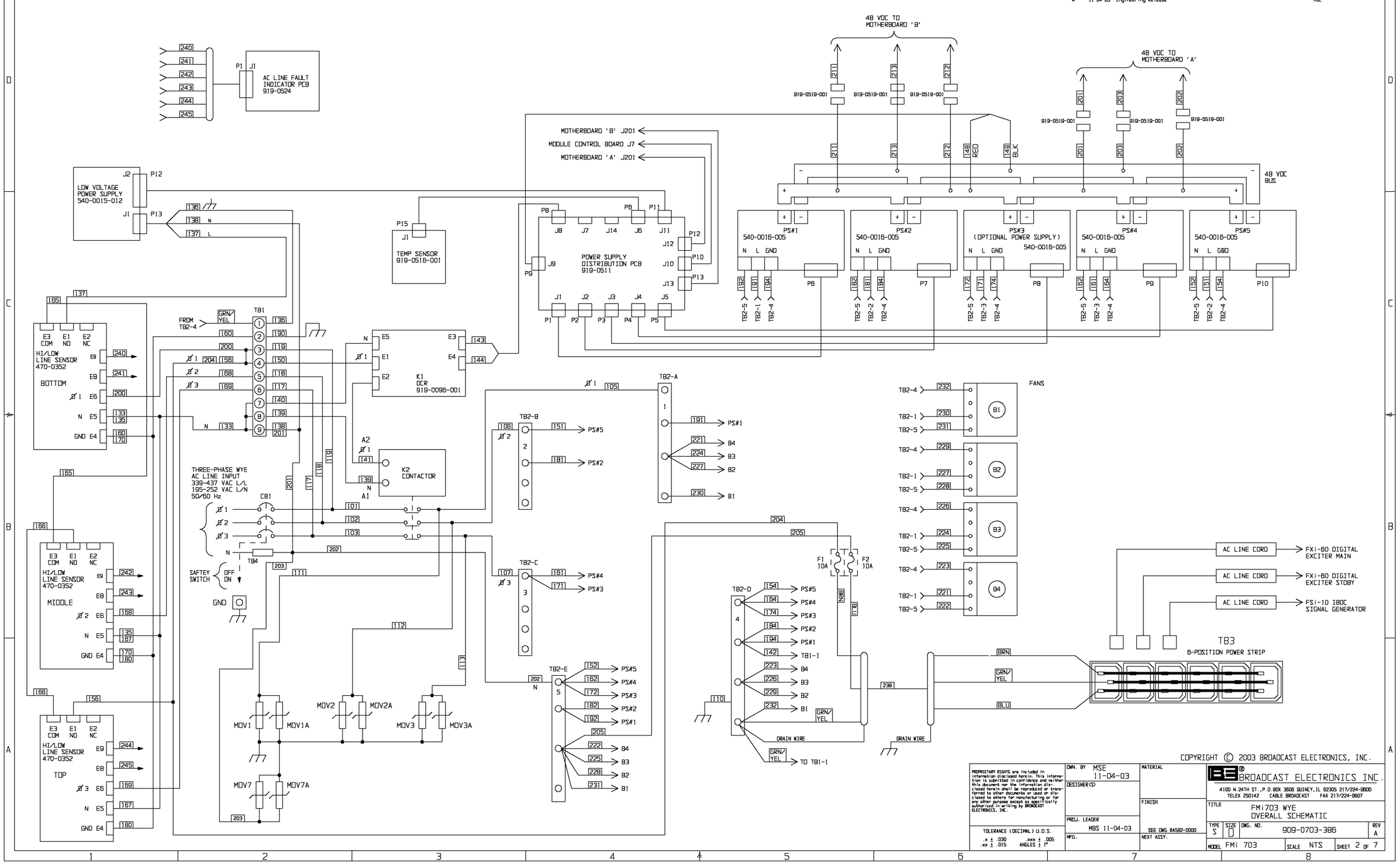

TOLERANCE (DECIMAL) U.O.S.
.x ± .030 .xxx ± .005
.xx ± .015 ANGLES ± 1°

DWN. BY MSE 11-04-03
DESIGNER(S)
PROJ. LEADER MBS 11-04-03
MFG.
MATERIAL
FINISH SEE DWG RA592-0000
NEXT ASSY.

BROADCAST ELECTRONICS INC.
4100 N.24TH ST.,P.O.BOX 3606 QUINCY,IL 62305 217/224-9600
TELEX 250142 CABLE BROADCAST FAX 217/224-9607

TITLE FMi703 WYE OVERALL SCHEMATIC

TYPE	SIZE	DWG. NO.	REV
S	D	909-0703-386	A

MODEL FMi 703 SCALE NTS SHEET 2 OF 7

REVISIONS					
REV	DATE	DESCRIPTION	DRAFTER	APPROVED	ECN
A	11-04-03	Engineering Release	MSE		

MOTHERBOARD J107 <-> RF MODULE J6

1	GND
2	RF IN
3	RF IN
4	GND
5	GND
6	+5V
7	-12V
8	LOGIC GND
9	LOGIC GND
10	GND
11	GND
12	GND
13	SELECT MOD 7
14	GND
15	VDC E107
16	VDC E107
17	VDC E107
18	PRESENCE MOD 7B
19	PRESENCE MOD 7A
20	GND
21	GND
22	GND
23	+12V
24	RESET
25	BIAS CTL MOD 7
26	FWD PWR
27	RFL PWR
28	TEMP
29	MOD CURRENT
30	SPARE
31	GND
32	GND
33	VDC E107
34	VDC E107
35	VDC E107
36	GND

MOTHERBOARD J109 <-> RF MODULE J6

1	GND
2	RF IN
3	RF IN
4	GND
5	GND
6	+5V
7	-12V
8	LOGIC GND
9	LOGIC GND
10	GND
11	GND
12	GND
13	SELECT MOD 9
14	GND
15	VDC E109
16	VDC E109
17	VDC E109
18	PRESENCE MOD 9B
19	PRESENCE MOD 9A
20	GND
21	GND
22	GND
23	+12V
24	RESET
25	BIAS CTL MOD 9
26	FWD PWR
27	RFL PWR
28	TEMP
29	MOD CURRENT
30	SPARE
31	GND
32	GND
33	VDC E109
34	VDC E109
35	VDC E109
36	GND

MOTHERBOARD J101 <-> RF MODULE J6

1	GND
2	RF IN
3	RF IN
4	GND
5	GND
6	+5V
7	-12V
8	LOGIC GND
9	LOGIC GND
10	GND
11	GND
12	GND
13	SELECT MOD 1
14	GND
15	VDC E101
16	VDC E101
17	VDC E101
18	PRESENCE MOD 1B
19	PRESENCE MOD 1A
20	GND
21	GND
22	GND
23	+12V
24	RESET
25	BIAS CTL MOD 1
26	FWD PWR
27	RFL PWR
28	TEMP
29	MOD CURRENT
30	SPARE
31	GND
32	GND
33	VDC E101
34	VDC E101
35	VDC E101
36	GND

MOTHERBOARD J103 <-> RF MODULE J6

1	GND
2	RF IN
3	RF IN
4	GND
5	GND
6	+5V
7	-12V
8	LOGIC GND
9	LOGIC GND
10	GND
11	GND
12	GND
13	SELECT MOD 3
14	GND
15	VDC E103
16	VDC E103
17	VDC E103
18	PRESENCE MOD 3B
19	PRESENCE MOD 3A
20	GND
21	GND
22	GND
23	+12V
24	RESET
25	BIAS CTL MOD 3
26	FWD PWR
27	RFL PWR
28	TEMP
29	MOD CURRENT
30	SPARE
31	GND
32	GND
33	VDC E103
34	VDC E103
35	VDC E103
36	GND

MOTHERBOARD J105 <-> RF MODULE J6

1	GND
2	RF IN
3	RF IN
4	GND
5	GND
6	+5V
7	-12V
8	LOGIC GND
9	LOGIC GND
10	GND
11	GND
12	GND
13	SELECT MOD 5
14	GND
15	VDC E105
16	VDC E105
17	VDC E105
18	PRESENCE MOD 5B
19	PRESENCE MOD 5A
20	GND
21	GND
22	GND
23	+12V
24	RESET
25	BIAS CTL MOD 5
26	FWD PWR
27	RFL PWR
28	TEMP
29	MOD CURRENT
30	SPARE
31	GND
32	GND
33	VDC E105
34	VDC E105
35	VDC E105
36	GND

MOTHERBOARD J102 <-> RF MODULE J6

1	GND
2	RF IN
3	RF IN
4	GND
5	GND
6	+5V
7	-12V
8	LOGIC GND
9	LOGIC GND
10	GND
11	GND
12	GND
13	SELECT MOD 2
14	GND
15	VDC E102
16	VDC E102
17	VDC E102
18	PRESENCE MOD 2B
19	PRESENCE MOD 2A
20	GND
21	GND
22	GND
23	+12V
24	RESET
25	BIAS CTL MOD 2
26	FWD PWR
27	RFL PWR
28	TEMP
29	MOD CURRENT
30	SPARE
31	GND
32	GND
33	VDC E102
34	VDC E102
35	VDC E102
36	GND

MOTHERBOARD J104 <-> RF MODULE J6

1	GND
2	RF IN
3	RF IN
4	GND
5	GND
6	+5V
7	-12V
8	LOGIC GND
9	LOGIC GND
10	GND
11	GND
12	GND
13	SELECT MOD 4
14	GND
15	VDC E104
16	VDC E104
17	VDC E104
18	PRESENCE MOD 4B
19	PRESENCE MOD 4A
20	GND
21	GND
22	GND
23	+12V
24	RESET
25	BIAS CTL MOD 4
26	FWD PWR
27	RFL PWR
28	TEMP
29	MOD CURRENT
30	SPARE
31	GND
32	GND
33	VDC E104
34	VDC E104
35	VDC E104
36	GND

MOTHERBOARD J106 <-> RF MODULE J6

1	GND
2	RF IN
3	RF IN
4	GND
5	GND
6	+5V
7	-12V
8	LOGIC GND
9	LOGIC GND
10	GND
11	GND
12	GND
13	SELECT MOD 6
14	GND
15	VDC E106
16	VDC E106
17	VDC E106
18	PRESENCE MOD 6B
19	PRESENCE MOD 6A
20	GND
21	GND
22	GND
23	+12V
24	RESET
25	BIAS CTL MOD 6
26	FWD PWR
27	RFL PWR
28	TEMP
29	MOD CURRENT
30	SPARE
31	GND
32	GND
33	VDC E106
34	VDC E106
35	VDC E106
36	GND

MOTHERBOARD J108 <-> RF MODULE J6

1	GND
2	RF IN
3	RF IN
4	GND
5	GND
6	+5V
7	-12V
8	LOGIC GND
9	LOGIC GND
10	GND
11	GND
12	GNB
13	SELECT MOD 8
14	GND
15	VDC E108
16	VDC E108
17	VDC E108
18	PRESENCE MOD 8B
19	PRESENCE MOD 8A
20	GND
21	GND
22	GND
23	+12V
24	RESET
25	BIAS CTL MOD 8
26	FWD PWR
27	RFL PWR
28	TEMP
29	MOD CURRENT
30	SPARE
31	GND
32	GND
33	VDC E108
34	VDC E108
35	VDC E108
36	GND

MOTHERBOARD J110 <-> CONTROLLER P1A

1	SELECT MOD 9
2	LOGIC GND
3	LOGIC GND
4	RESET
5	LOGIC GND
6	BIAS CTL MOD 7
7	SELECT MOD 7
8	BIAS CTL MOD 5
9	SELECT MOD 5
10	PRESENCE MOD 3A
11	PRESENCE MOD 3B
12	SELECT MOD 3
13	PRESENCE MOD 1A
14	BIAS CTL MOD 1
15	SELECT MOD 1
16	BIAS CTL MOD 3
17	PRESENCE MOD 1B
18	PRESENCE MOD 5B
19	PRESENCE MOD 5A
20	PRESENCE MOD 7B
21	PRESENCE MOD 7A
22	N/C
23	N/C
24	BIAS CTL MOD 9
25	LOGIC GND

MOTHERBOARD J111 <-> CONTROLLER P2A

1	PRESENCE MOD 6A
2	BIAS CTL MOD 6
3	PRESENCE MOD 6B
4	SELECT MOD 6
5	PRESENCE MOD 8A
6	BIAS CTL MOD 8
7	PRESENCE MOD 8B
8	SELECT MOD 8
9	TEMP SAMPLE X10
10	FWD PWR
11	TEMP
12	SPARE
13	N/C
14	PRESENCE MOD 9B
15	MOD CURRENT
16	RFL PWR
17	PRESENCE MOD 9A
18	PRESENCE MOD 4A
19	BIAS CTL MOD 4
20	PRESENCE MOD 4B
21	SELECT MOD 4
22	PRESENCE MOD 2A
23	BIAS CTL MOD 2
24	PRESENCE MOD 2B
25	SELECT MOD 2

P.S DIST PCB J10 <-> CONTROLLER J7

1	VC+
2	VC GND
3	FAULT 1
4	LOGIC GND
5	INHIBIT
6	FAULT 2
7	FAULT 3
8	FAULT 4
9	FAULT 5
10	TEMP SAMPLE
11	H/L AC LINE SENSOR
12	OCR CONTROL
13	+24V
14	+48V SAMPLE
15	+5V
16	+5V
17	+5V
18	GND
19	GND
20	GND
21	GND
22	-12V
23	-12V
24	+12V
25	+12V

P.S DIST PCB J12/J13 <-> MOTHEBOARD A & B J201/J115

1	+12V
2	+12V
3	+12V
4	N/C
5	N/C
6	-12V
7	-12V
8	-12V
9	+15V
10	CHASSIS GND

TOLERANCE (DECIMAL) U.O.S.
.x ± .030 .xxx ± .005
.xx ± .015 ANGLES ± 1°

DWN. BY MSE 11-04-03
DESIGNER(S)
PROJ. LEADER MBS 11-04-03
MFG.
MATERIAL
FINISH
SEE DWG RA592-0000
NEXT ASSY.

BROADCAST ELECTRONICS INC.
4100 N.24TH ST.,P.O.BOX 3606 QUINCY,IL 62305 217/224-9600
TELEX 250142 CABLE BROADCAST FAX 217/224-9607

TITLE FMi703 WYE OVERALL SCHEMATIC

TYPE	SIZE	DWG. NO.	REV
S	D	909-0703-386	A

MODEL FMi 703 SCALE NTS SHEET 3 OF 7

FMi–703 OVERALL SCHEMATIC SHT. 4 OF 7 (PAGE 1)			CONTROLLER I/O BOARD AND WIRE HARNESS				37–PIN SUB–D CONNECTOR PIN–OUTS				
37–PIN			25–PIN			MAIN	STAND-BY	EXC	IPA IN	IPA OUT	LOW
CON-TROL-LER	WIRE	CIRCUIT FUNCTION	CON-TROL-LER	CON-TROL-LER	WIRE	FXI–60	FXI–60	RELAY	RELAY	RELAY	PASS
I/O BOARD	HARNESS		RMTE I/F BD	RMTE I/F BD	HAR-NESS	EXCIT-ER	EXCIT-ER	S1	S2	S3	FILTER
J5 ——— P5	WIRE NO.		J5 ——— P5		WIRE NO.	J3	J3	J1 ——— P1	J1 ——— P1	J1 ——— P1	J23
1	102–WHT	STBY EXC RF UNMUTE	12	J2–3	P2/112–WHT		14				
2	102–YEL	STBY EXC AFC UNLOCK	13	J2–4	P2/112–YEL		1				
3	104–RED	IPA IN RELAY CONTROL							2		
4	105–RED	IPA OUT RELAY CONTROL								2	
5	103–RED	EXC OUT RELAY CON-TROL	20	J3–2	P3/113–RED			2			
6	103 GRN	EXC RELAY TALLY	21	J3–3	P3/113–GRN			4			
7	104–GRN	IPA IN RELAY TALLY							4		
8	JUMPER	INTERLOCK RETURN									
9	101–RED	MAIN EXC OVER TEMP	5	J1–5	P1/111–RED	8					
10	101–YEL	MAIN EXC AFC UNLOCK	4	J1–4	P1/111–YEL	1					
11	105–GRN	IPA OUT RELAY TALLY								4	
12	101–BLU	MAIN EXC PWR CON-TROL	7	J1–7	P1/111–BLU	7					
13	102–BLU	STBY EXC PWR CON-TROL	16	J2–7	P2/112–BLU		7				
14	101–GRN	MAIN EXC FWD PWR	1	J1–4	P1/111–GRN	9					
15	101–ORN	MAIN EXC RFL PWR	2	J1–2	P1/111–ORN	10					
16	101–WHT	MAIN EXC RF UNMUTE	3	J1–3	P1/111–WHT	14					
17	106–GRN	FILTER A (1) FWD PWR									4
18	106–RED	FILTER A (1) RFL PWR									1
19	107–GRN	FILTER B (2) FWD PWR									4
20	107–RED	FILTER B (2) RFL PWR									1
21											
22											
23											
24											
25	JUMPER	INTERLOCK OUT									
26	104–BLK	+24V' TO IPA IN RELAY							1		

27	105–BLK	+24V' TO IPA OUT RELAY								1	
28	103–BLK	+24V' TO EXC RELAY	19	J3–1	P3/113–BLK			1			
29	102–GRN	STBY EXC FWD PWR	10	J2–1	P2/112–GRN		9				
30	102–ORN	STBY EXC RFL PWR	11	J2–2	P2/112–ORN		10				
31	102–RED	STBY EXC OVER TEMP	14	J2–5	P2/111–RED		8				
32	101–BLK	GND TO MAIN EXC	6	J1–6	P1/111–BLK	2, 24					
33	102–BLK	GND TO STBY EXC	15	J2–6	P2/112–BLK		2, 24				
34	106–BLK	FILTER A (1) GND RETURN									3
35	107–BLK	FILTER B (2) GND RETURN									3
36											
37											

FM–10S/FMi–703 OVERALL SCHEMATIC SHT. 5 OF 7 (PAGE 1 OF 3)				
MOTHERBOARD AND CONTROLLER MODULE CONTROL BOARD				
25–PIN SUB–D CONNECTOR PIN–OUTS				
		DATA	CONTROLLER	CONTROLLER
MOTHERBOARD CONNECTORS		CABLE	CHASSIS	MODULE CONTROL BD
J110	MOTHERBD ”A” LEFT	P110A/P1A	J1A	J1
J110	MOTHERBD ”B” RIGHT	P110B/P101B	J101B	J101
1	SELECT MODULE 9	1	1	1
2	LOGIC GND	2	2	2
3	LOGIC GND	3	3	3
4	RESET	4	4	4
5	LOGIC GND	5	5	5
6	BIAS CONTROL MODULE 7	6	6	6
7	SELECT MODULE 7	7	7	7
8	BIAS CONTROL MODULE 5	8	8	8
9	SELECT MODULE 5	9	9	9
10	PRESENCE MODULE 3A	10	10	10
11	PRESENCE MODULE 3B	11	11	11
12	SELECT MODULE 3	12	12	12
13	PRESENCE MODULE 1A	13	13	13
14	BIAS CONTROL MODULE 1	14	14	14
15	SELECT MODULE 1	15	15	15
16	BIAS CONTROL MODULE 3	16	16	16
17	PRESENCE MODULE 1B	17	17	17
18	PRESENCE MODULE 5B	18	18	18
19	PRESENCE MODULE 5A	19	19	19
20	PRESENCE MODULE 7B	20	20	20
21	PRESENCE MODULE 7A	21	21	21
22	N/C	22	22	22
23	N/C	23	23	23
24	BIAS CONTROL MODULE 9	24	24	24
25	LOGIC GND	25	25	25

FM–10S/FMi–703 OVERALL SCHEMATIC SHT. 5 OF 7 (PAGE 2 OF 3)				
MOTHERBOARD AND CONTROLLER MODULE CONTROL BOARD				
25–PIN SUB–D CONNECTOR PIN–OUTS CONTD_				
		DATA	CONTROLLER	CONTROLLER
MOTHERBOARD CONNECTORS		CABLE	CHASSIS	MODULE CONTROL BD
J111	MOTHERBD ”A” LEFT	P111A/P2A	J2A	J2
J111	MOTHERBD ”B” RIGHT	P111B/P102B	J102B	J102
1	PRESENCE MODULE 6A	1	1	1
2	BIAS CONTROL MODULE 6	2	2	2
3	PRESENCE MODULE 6B	3	3	3
4	SELECT MODULE 6	4	4	4
5	PRESENCE MODULE 8A	5	5	5
6	BIAS CONTROL MODULE 8	6	6	6
7	PRESENCE MODULE 8B	7	7	7
8	SELECT MODULE 8	8	8	8
9	TEMP SAMPLE X 5 (IPA REJ LOAD)	9	9	9
10	MODULE FORWARD POWER	10	10	10
11	MODULE TEMPERATURE	11	11	11
12	SPARE	12	12	12
13	N/C	13	13	13
14	PRESENCE MODULE 9B	14	14	14
15	MODULE CURRENT	15	15	15
16	MODULE REFLECTED POWER	16	16	16
17	PRESENCE MODULE 9A	17	17	17
18	PRESENCE MODULE 4A	18	18	18
19	BIAS CONTROL MODULE 4	19	19	19
20	PRESENCE MODULE 4B	20	20	20
21	SELECT MODULE 4	21	21	21
22	PRESENCE MODULE 2A	22	22	22
23	BIAS CONTROL MODULE 2	23	23	23
24	PRESENCE MODULE 2B	24	24	24
25	SELECT MODULE 2	25	25	25

FM–10S/FMi–703 OVERALL SCHEMATIC SHT. 5 OF 7 (PAGE 3 OF 3)			
MOTHERBOARD AND IPA SPLITER REJECT LOAD TEMPERATURE SENSOR BOARD			
4–PIN CONNECTOR PIN–OUTS			
MOTHERBOARD ”A”			TEMP SENSOR BOARD
CONNECTOR	WIRE HARNESS	CIRCUIT FUNCTION	(IPA REJECT LOAD)
J114	P114/P1		J1
1	RED	+12V	1
2	N/C	TEMP SAMPLE (.01V/DEG.C)	2
3	BLACK	TEMP SAMPLE X 5	3
4	SHIELD	GND	4

FM–10S/FMi–703 OVERALL SCHEMATIC SHT. 6 OF 7 (PAGE 1 OF 2)						
8–WAY COMBINER ”A” LEFT						
9–PIN SUB–D CONNECTOR PINOUTS						
TOP COMBINER INPUT CONTROL BOARD		RIBBON	DATA	CONTROL-LER		
9–PIN SUB–D CONNECTOR		CABLE	CABLE	CHASSIS	CONTROL-LER MOD-ULE CON-TROL BD	
J1B	8–WAY COMBINER ”A”	P1	P1AT/P3A	J3A	J3	9–PIN SUB–D CONNECTOR
1	RELAY K4 PIN 2 COIL (–) RETURN	1	1	1	1	MODULE 1 FAULT – GROUND
2	RELAY K3 PIN 2 COIL (–) RETURN	2	2	2	2	MODULE 3 FAULT – GROUND
3	RELAYS K1 THRU K4 PIN 1 COIL (+)	3	3	3	3	DC +12V TO RELAY COILS
4	RELAY K2 PIN 2 COIL (–) RETURN	4	4	4	4	MODULE 5 FAULT – GROUND
5	RELAY K1 PIN 2 COIL (–) RETURN	5	5	5	5	MODULE 7 FAULT – GROUND
6	LOGIC GROUND	6	6	6	6	LOGIC GROUND
7	LOGIC GROUND	7	7	7	7	LOGIC GROUND
8	LOGIC GROUND	8	8	8	8	LOGIC GROUND
9	LOGIC GROUND	9	9	9	9	LOGIC GROUND
BOTTOM COMBINER INPUT CONTROL BOARD		RIBBON	DATA	CONTROL-LER		
9–PIN SUB–D CONNECTOR		CABLE	CABLE	CHASSIS	CONTROL-LER MOD-ULE CON-TROL BD	
J1	8–WAY COMBINER ”A”	P1	P1AB/P4A	J4A	J4	9–PIN SUB–D CONNECTOR
1	RELAY K4 PIN 2 COIL (–) RETURN	1	1	1	1	MODULE 2 FAULT – GROUND
2	RELAY K3 PIN 2 COIL (–) RETURN	2	2	2	2	MODULE 4 FAULT – GROUND
3	RELAYS K1 THRU K4 PIN 1 COIL (+)	3	3	3	3	DC +12V TO RELAY COILS
4	RELAY K2 PIN 2 COIL (–) RETURN	4	4	4	4	MODULE 6 FAULT – GROUND
5	RELAY K1 PIN 2 COIL (–) RETURN	5	5	5	5	MODULE 8 FAULT – GROUND
6	LOGIC GROUND	6	6	6	6	LOGIC GROUND
7	LOGIC GROUND	7	7	7	7	LOGIC GROUND
8	LOGIC GROUND	8	8	8	8	LOGIC GROUND
9	LOGIC GROUND	9	9	9	9	LOGIC GROUND

FM–10S/FMi–703 OVERALL SCHEMATIC SHT. 6 OF 7 (PAGE 2 OF 2)						
8–WAY COMBINER ”B” RIGHT						
9–PIN SUB–D CONNECTOR PINOUTS						
TOP COMBINER INPUT CONTROL BOARD		RIBBON	DATA	CONTROL-LER		
9–PIN SUB–D CONNECTOR		CABLE	CABLE	CHASSIS	CONTROL-LER MOD-ULE CON-TROL BD	
J1	8–WAY COMBINER ”B”	P1	P1BT/ P103B	J103B	J103	9–PIN SUB–D CONNECTOR
1	RELAY K4 PIN 2 COIL (–) RETURN	1	1	1	1	MODULE 15 FAULT – GROUND
2	RELAY K3 PIN 2 COIL (–) RETURN	2	2	2	2	MODULE 13 FAULT – GROUND
3	RELAYS K1 THRU K4 PIN 1 COIL (+)	3	3	3	3	DC +12V TO RELAY COILS
4	RELAY K2 PIN 2 COIL (–) RETURN	4	4	4	4	MODULE 11 FAULT – GROUND
5	RELAY K1 PIN 2 COIL (–) RETURN	5	5	5	5	MODULE 9 FAULT – GROUND
6	LOGIC GROUND	6	6	6	6	LOGIC GROUND
7	LOGIC GROUND	7	7	7	7	LOGIC GROUND
8	LOGIC GROUND	8	8	8	8	LOGIC GROUND
9	LOGIC GROUND	9	9	9	9	LOGIC GROUND
BOTTOM COMBINER INPUT CONTROL BOARD		RIBBON	DATA	CONTROL-LER		
9–PIN SUB–D CONNECTOR		CABLE	CABLE	CHASSIS	CONTROL-LER MOD-ULE CON-TROL BD	
J1B	8–WAY COMBINER ”B”	P1	P1BB/P104 B	J104B	J104	9–PIN SUB–D CONNECTOR
1	RELAY K4 PIN 2 COIL (–) RETURN	1	1	1	1	MODULE 10 FAULT – GROUND
2	RELAY K3 PIN 2 COIL (–) RETURN	2	2	2	2	MODULE 12 FAULT – GROUND
3	RELAYS K1 THRU K4 PIN 1 COIL (+)	3	3	3	3	DC +12V TO RELAY COILS
4	RELAY K2 PIN 2 COIL (–) RETURN	4	4	4	4	MODULE 14 FAULT – GROUND
5	RELAY K1 PIN 2 COIL (–) RETURN	5	5	5	5	MODULE 16 FAULT – GROUND
6	LOGIC GROUND	6	6	6	6	LOGIC GROUND
7	LOGIC GROUND	7	7	7	7	LOGIC GROUND
8	LOGIC GROUND	8	8	8	8	LOGIC GROUND
9	LOGIC GROUND	9	9	9	9	LOGIC GROUND

FM–10S/FMi–703 OVERALL SCHEMATIC SHT. 7 OF 7 (PAGE 1 OF 4)			909–1010–386 / 909–0703–386
P.S. DISTRIBUTION BOARD AND P.S. HARNESS			
CONNECTOR PIN–OUTS			
P.S. DISTRIB. BOARD			5KW POWER SUPPLY
CONNECTOR	DATA CABLE	CIRCUIT FUNCTION	PS# 1 THRU PS# 5
J1 THRU J5	P1/P6 THRU P5/P10		J1
1	1	SENSE + (DC OUT SAMPLE)	1
2	2	VC+ (CONTROL VOLTAGE)	2
3	3	FAULT	3
4	4	VC_GND	4
9	9	LOGIC GND	9
10	10	CURRENT SHARE	10
13	13	P.S. INHIBIT	13
P.S. DISTRIB. BOARD			TEMP SENSOR BOARD
	¿	¿	¿
CONNECTOR	WIRE HARNESS	CIRCUIT FUNCTION	(INLET)
J6	P6/P15		J1
1	145	+12V	1
2	N/C	TEMP SAMPLE (.01V/DEG.C)	2
3	146	TEMP SAMPLE X 5	3
4	147	GND	4
P.S. DISTRIB. BOARD			
CONNECTOR	WIRE HARNESS	CIRCUIT FUNCTION	OCR
J8	P8		K1
1	143	OCR CONTROL (+12V)	E3
2	144	LOGIC GND	E4
P.S. DISTRIB. BOARD			
CONNECTOR	WIRE HARNESS	CIRCUIT FUNCTION	5KW POWER SUPPLY
J9	P9		PS# 1 THRU PS# 5
1	RED	SENSE + (DC OUT SAMPLE)	DC OUTPUT BUS +
2	BLACK	VC_GND	DC OUTPUT BUS –

FM–10S/FMi–703 OVERALL SCHEMATIC SHT. 7 OF 7 (PAGE 2 OF 4)			909–1010–386 / 909–0703–386
P.S. DISTRIBUTION BOARD AND P.S. HARNESS			
CONNECTOR PIN–OUTS CONTD_			
P.S. DISTRIB. BOARD			CONTROLLER
CONNECTOR	WIRE HARNESS	CIRCUIT FUNCTION	MODULE CONTROL BOARD
J10	P10/P7A		J7
1	BLACK	VC+	1
2	RED	VC GND	2
3	GREEN	P.S.FAULT 1	3
4	WHITE	LOGIC GND	4
5	BROWN	P.S.INHIBIT	5
6	BLUE	P.S.FAULT 2	6
7	ORANGE	P.S.FAULT 3	7
8	YELLOW	P.S.FAULT 4	8
9	VIOLET	P.S.FAULT 5	9
10	GRAY	TEMP SAMPLE X 5 (INLET)	10
11	PINK	HI/LO AC LINE SENSOR	11
12	TAN	OCR CONTROL (+12V)	12
13	RED/GREEN	+24V	13
14	RED/YELLOW	+48V (DC OUT SAMPLE)	14
15	RED/BLACK	+5V	15
16	WHITE/BLACK	+5V	16
17	WHITE/RED	+5V	17
18	WHITE/GREEN	GND	18
19	WHITE/YELLOW	GND	19
20	WHITE/BLUE	GND	20
21	WHITE/BROWN	GND	21
22	WHITE/ORANGE	–12V	22
23	WHITE/GRAY	–12V	23
24	WHITE/VIOLET	+12V	24
25	BLACK/RED	+12V	25

FM–10S/FMi–703 OVERALL SCHEMATIC SHT. 7 OF 7 (PAGE 3 OF 4)			909–1010–386 / 909–0703–386	
P.S. DISTRIBUTION BOARD AND P.S. HARNESS				
CONNECTOR PIN–OUTS CONTD_				
P.S. DISTRIB. BOARD				LOW VOLTAGE
CONNECTOR	WIRE HARNESS	CIRCUIT FUNCTION	WIRE HARNESS	POWER SUPPLY
J11	P11		P12	J2
1	132	+5V	132	1
2	131	+5V	131	2
3	130	+5V	130	3
4	129	GND	129	4
5	128	GND	128	5
6	127	GND	127	6
7	126	GND	126	7
8	125	+12V	125	8
9	124	+12V	124	9
10	123	GND	123	10
11	122	–12V	122	11
12	121	+24V	N/C	12
			121	13
				LOW VOLTAGE
		CIRCUIT FUNCTION	WIRE HARNESS	POWER SUPPLY
			P13	J1
		GND	136	1
			N/C	2
		AC LINE NEUTRAL	138	3
			N/C	4
		AC LINE PHASE 2 (SWITCHED)	137	5

FM–10S/FMi–703 OVERALL SCHEMATIC SHT. 7 OF 7 (PAGE 4 OF 4)			909–1010–386 / 909–0703–386		
P.S. DISTRIBUTION BOARD AND P.S. HARNESS					
CONNECTOR PIN–OUTS CONTD_					
P.S. DISTRIB. BOARD	DATA CABLE		MOTHERBOARD ”A” OR ”B”		
CONNECTOR	P12/P201A OR	CIRCUIT FUNCTION	DC CONNECTOR BOARD		MO-THER-BOARD
J12 OR J13	P13/P201B		J201	J202	J115
1	1	+12V	1	1	1
2	2	+12V	2	2	2
3	3	N/C	3	4	4
4	4	–12V	4	6	6
5	5	+5V	5	9	9
6	6	+12V	6	3	3
7	7	N/C	7	5	5
8	8	–12V	8	7	7
9	9	–12V	9	8	8
SHELL	SHIELD	CHASSIS GND	CHASSIS GND	10	10
POWER SUPPLY HARNESS		CIRCUIT FUNCTION	AC LINE FAULT IND. BOARD		
CONNECTOR P1	WIRE NO.		J1		
1	240	LOSS OF AC LINE PHASE 1	1		
2	241	LOGIC GND	2		
3	242	LOSS OF AC LINE PHASE 2	3		
4	243	LOGIC GND	4		
5	244	LOSS OF AC LINE PHASE 3	5		
6	245	LOGIC GND	6		

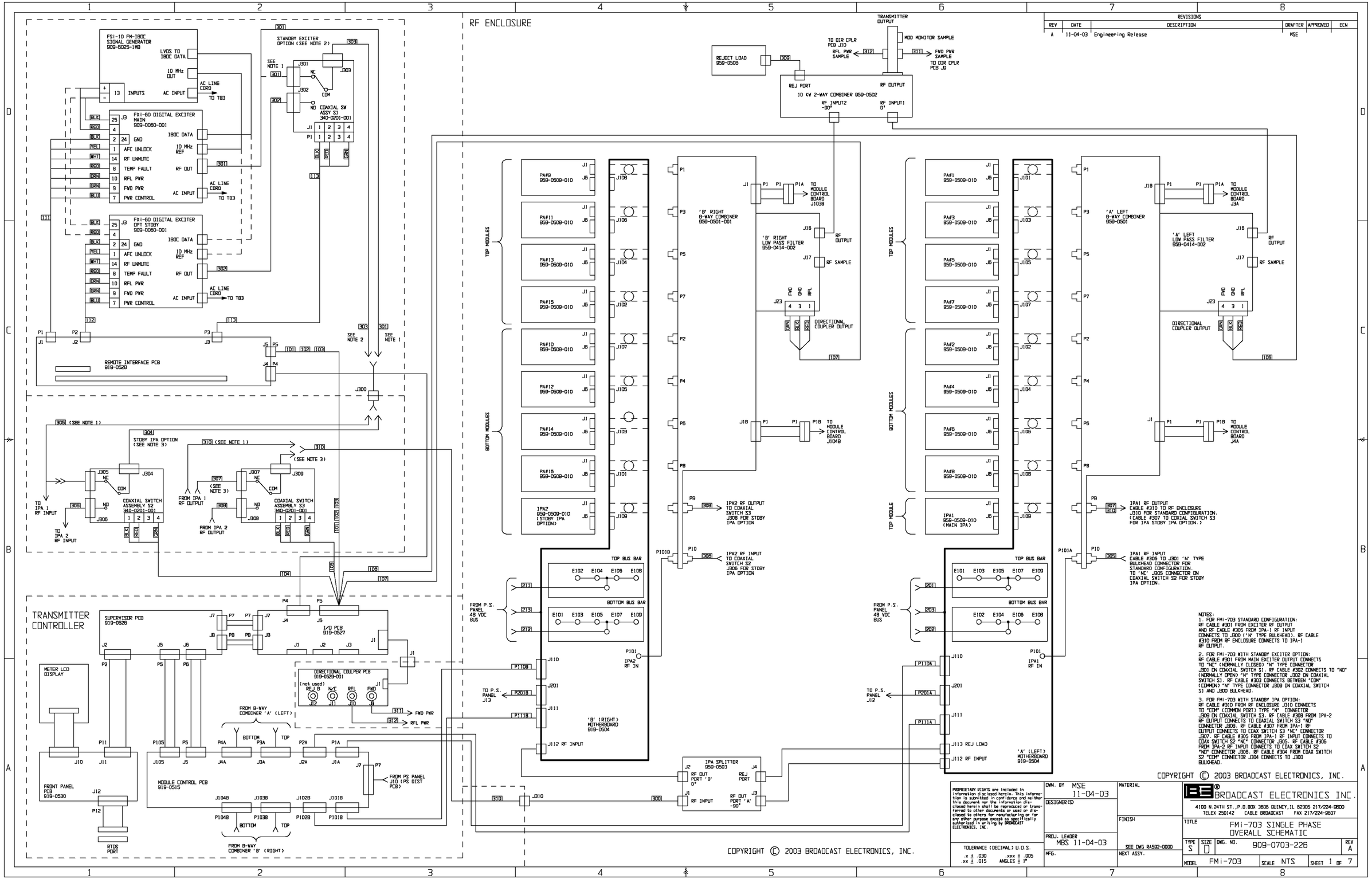

REVISIONS					
REV	DATE	DESCRIPTION	DRAFTER	APPROVED	ECN
A	11-04-03	Engineering Release	MSE		

REVISIONS					
REV	DATE	DESCRIPTION	DRAFTER	APPROVED	ECN
A	11-03-03	ENGINEERING RELEASE	MSE		

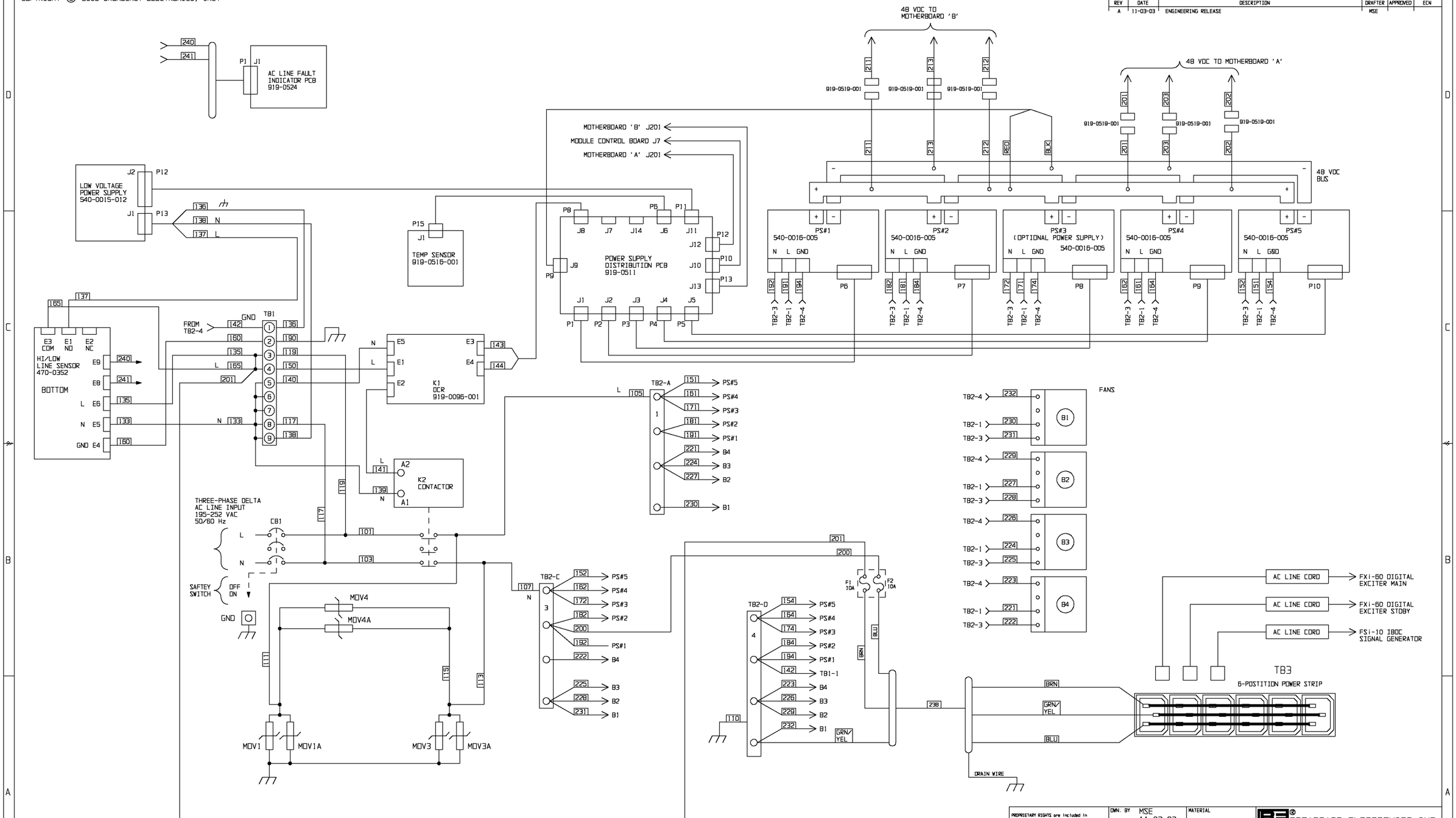

TOLERANCE (DECIMAL) U.O.S.
.x ± .030 .xxx ± .005
.xx ± .015 ANGLES ± 1°

DWN. BY MSE 11-03-03
DESIGNER(S)
PROJ. LEADER MBS 11-04-03
MFG.
MATERIAL
FINISH SEE DWG RA502-0000
NEXT ASSY.

BROADCAST ELECTRONICS INC.
4100 N.24TH ST.,P.O.BOX 3606 QUINCY,IL 62305 217/224-9600
TELEX 250142 CABLE BROADCAST FAX 217/224-9607

TITLE FMi703 SINGLE PHASE OVERALL SCHEMATIC

TYPE	SIZE	DWG. NO.	REV
S	D	909-0703-226	A

MODEL FMi703 SCALE NTS SHEET 2 OF 7

REVISIONS					
REV	DATE	DESCRIPTION	DRAFTER	APPROVED	ECN
A	11-03-03	Engineering release	MSE		

MOTHERBOARD J107 <-> RF MODULE J6

1	GND
2	RF IN
3	RF IN
4	GND
5	GND
6	+5V
7	-12V
8	LOGIC GND
9	LOGIC GND
10	GND
11	GND
12	GND
13	SELECT MOD 7
14	GND
15	VDC E107
16	VDC E107
17	VDC E107
18	PRESENCE MOD 7B
19	PRESENCE MOD 7A
20	GND
21	GND
22	GND
23	+12V
24	RESET
25	BIAS CTL MOD 7
26	FWD PWR
27	RFL PWR
28	TEMP
29	MOD CURRENT
30	SPARE
31	GND
32	GND
33	VDC E107
34	VDC E107
35	VDC E107
36	GND

MOTHERBOARD J109 <-> RF MODULE J6

1	GND
2	RF IN
3	RF IN
4	GND
5	GND
6	+5V
7	-12V
8	LOGIC GND
9	LOGIC GND
10	GND
11	GND
12	GND
13	SELECT MOD 9
14	GND
15	VDC E109
16	VDC E109
17	VDC E109
18	PRESENCE MOD 9B
19	PRESENCE MOD 9A
20	GND
21	GND
22	GND
23	+12V
24	RESET
25	BIAS CTL MOD 9
26	FWD PWR
27	RFL PWR
28	TEMP
29	MOD CURRENT
30	SPARE
31	GND
32	GND
33	VDC E109
34	VDC E109
35	VDC E109
36	GND

MOTHERBOARD J101 <-> RF MODULE J6

1	GND
2	RF IN
3	RF IN
4	GND
5	GND
6	+5V
7	-12V
8	LOGIC GND
9	LOGIC GND
10	GND
11	GND
12	GND
13	SELECT MOD 1
14	GND
15	VDC E101
16	VDC E101
17	VDC E101
18	PRESENCE MOD 1B
19	PRESENCE MOD 1A
20	GND
21	GND
22	GND
23	+12V
24	RESET
25	BIAS CTL MOD 1
26	FWD PWR
27	RFL PWR
28	TEMP
29	MOD CURRENT
30	SPARE
31	GND
32	GND
33	VDC E101
34	VDC E101
35	VDC E101
36	GND

MOTHERBOARD J103 <-> RF MODULE J6

1	GND
2	RF IN
3	RF IN
4	GND
5	GND
6	+5V
7	-12V
8	LOGIC GND
9	LOGIC GND
10	GND
11	GND
12	GND
13	SELECT MOD 3
14	GND
15	VDC E103
16	VDC E103
17	VDC E103
18	PRESENCE MOD 3B
19	PRESENCE MOD 3A
20	GND
21	GND
22	GND
23	+12V
24	RESET
25	BIAS CTL MOD 3
26	FWD PWR
27	RFL PWR
28	TEMP
29	MOD CURRENT
30	SPARE
31	GND
32	GND
33	VDC E103
34	VDC E103
35	VDC E103
36	GND

MOTHERBOARD J105 <-> RF MODULE J6

1	GND
2	RF IN
3	RF IN
4	GND
5	GND
6	+5V
7	-12V
8	LOGIC GND
9	LOGIC GND
10	GND
11	GND
12	GND
13	SELECT MOD 5
14	GND
15	VDC E105
16	VDC E105
17	VDC E105
18	PRESENCE MOD 5B
19	PRESENCE MOD 5A
20	GND
21	GND
22	GND
23	+12V
24	RESET
25	BIAS CTL MOD 5
26	FWD PWR
27	RFL PWR
28	TEMP
29	MOD CURRENT
30	SPARE
31	GND
32	GND
33	VDC E105
34	VDC E105
35	VDC E105
36	GND

MOTHERBOARD J102 <-> RF MODULE J6

1	GND
2	RF IN
3	RF IN
4	GND
5	GND
6	+5V
7	-12V
8	LOGIC GND
9	LOGIC GND
10	GND
11	GND
12	GND
13	SELECT MOD 2
14	GND
15	VDC E102
16	VDC E102
17	VDC E102
18	PRESENCE MOD 2B
19	PRESENCE MOD 2A
20	GND
21	GND
22	GND
23	+12V
24	RESET
25	BIAS CTL MOD 2
26	FWD PWR
27	RFL PWR
28	TEMP
29	MOD CURRENT
30	SPARE
31	GND
32	GND
33	VDC E102
34	VDC E102
35	VDC E102
36	GND

MOTHERBOARD J104 <-> RF MODULE J6

1	GND
2	RF IN
3	RF IN
4	GND
5	GND
6	+5V
7	-12V
8	LOGIC GND
9	LOGIC GND
10	GND
11	GND
12	GND
13	SELECT MOD 4
14	GND
15	VDC E104
16	VDC E104
17	VDC E104
18	PRESENCE MOD 4B
19	PRESENCE MOD 4A
20	GND
21	GND
22	GND
23	+12V
24	RESET
25	BIAS CTL MOD 4
26	FWD PWR
27	RFL PWR
28	TEMP
29	MOD CURRENT
30	SPARE
31	GND
32	GND
33	VDC E104
34	VDC E104
35	VDC E104
36	GND

MOTHERBOARD J106 <-> RF MODULE J6

1	GND
2	RF IN
3	RF IN
4	GND
5	GND
6	+5V
7	-12V
8	LOGIC GND
9	LOGIC GND
10	GND
11	GND
12	GND
13	SELECT MOD 6
14	GND
15	VDC E106
16	VDC E106
17	VDC E106
18	PRESENCE MOD 6B
19	PRESENCE MOD 6A
20	GND
21	GND
22	GND
23	+12V
24	RESET
25	BIAS CTL MOD 6
26	FWD PWR
27	RFL PWR
28	TEMP
29	MOD CURRENT
30	SPARE
31	GND
32	GND
33	VDC E106
34	VDC E106
35	VDC E106
36	GND

MOTHERBOARD J108 <-> RF MODULE J6

1	GND
2	RF IN
3	RF IN
4	GND
5	GND
6	+5V
7	-12V
8	LOGIC GND
9	LOGIC GND
10	GND
11	GND
12	GNB
13	SELECT MOD B
14	GND
15	VDC E108
16	VDC E108
17	VDC E108
18	PRESENCE MOD BB
19	PRESENCE MOD BA
20	GND
21	GND
22	GND
23	+12V
24	RESET
25	BIAS CTL MOD B
26	FWD PWR
27	RFL PWR
28	TEMP
29	MOD CURRENT
30	SPARE
31	GND
32	GND
33	VDC E108
34	VDC E108
35	VDC E108
36	GND

MOTHERBOARD J110 <-> CONTROLLER P1A

1	SELECT MOD 9
2	LOGIC GND
3	LOGIC GND
4	RESET
5	LOGIC GND
6	BIAS CTL MOD 7
7	SELECT MOD 7
8	BIAS CTL MOD 5
9	SELECT MOD 5
10	PRESENCE MOD 3A
11	PRESENCE MOD 3B
12	SELECT MOD 3
13	PRESENCE MOD 1A
14	BIAS CTL MOD 1
15	SELECT MOD 1
16	BIAS CTL MOD 3
17	PRESENCE MOD 1B
18	PRESENCE MOD 5B
19	PRESENCE MOD 5A
20	PRESENCE MOD 7B
21	PRESENCE MOD 7A
22	N/C
23	N/C
24	BIAS CTL MOD 9
25	LOGIC GND

MOTHERBOARD J111 <-> CONTROLLER P2A

1	PRESENCE MOD 6A
2	BIAS CTL MOD 6
3	PRESENCE MOD 6B
4	SELECT MOD 6
5	PRESENCE MOD 8A
6	BIAS CTL MOD 8
7	PRESENCE MOD 8B
8	SELECT MOD 8
9	TEMP SAMPLE X10
10	FWD PWR
11	TEMP
12	SPARE
13	N/C
14	PRESENCE MOD 9B
15	MOD CURRENT
16	RFL PWR
17	PRESENCE MOD 9A
18	PRESENCE MOD 4A
19	BIAS CTL MOD 4
20	PRESENCE MOD 4B
21	SELECT MOD 4
22	PRESENCE MOD 2A
23	BIAS CTL MOD 2
24	PRESENCE MOD 2B
25	SELECT MOD 2

P.S DIST PCB J10 <-> CONTROLLER J7

1	VC+
2	VC GND
3	FAULT 1
4	LOGIC GND
5	INHIBIT
6	FAULT 2
7	FAULT 3
8	FAULT 4
9	FAULT 5
10	TEMP SAMPLE
11	H/L AC LINE SENSOR
12	OCR CONTROL
13	+24V
14	+48V SAMPLE
15	+5V
16	+5V
17	+5V
18	GND
19	GND
20	GND
21	GND
22	-12V
23	-12V
24	+12V
25	+12V

P.S DIST PCB J12/J13 <-> MOTHEBOARD A & B J201/J115

1	+12V
2	+12V
3	+12V
4	N/C
5	N/C
6	-12V
7	-12V
8	-12V
9	+15V
10	CHASSIS GND

TOLERANCE (DECIMAL) U.O.S.
.x ± .030 .xxx ± .005
.xx ± .015 ANGLES ± 1°

DWN. BY MSE 11-03-03
DESIGNER(S)
PROJ. LEADER MSB 11-04-03
MFG.
MATERIAL
FINISH
SEE DWG RA502-0000
NEXT ASSY.

BROADCAST ELECTRONICS INC.
4100 N.24TH ST.,P.O.BOX 3606 QUINCY,IL 62305 217/224-9600
TELEX 250142 CABLE BROADCAST FAX 217/224-9607

TITLE FMi703 SINGLE PHASE OVERALL SCHEMATIC

TYPE	SIZE	DWG. NO.	REV
S	D	909-0703-226	A

MODEL FMi703 SCALE NTS SHEET 3 OF 7

FMi–703 OVERALL SCHEMATIC SHT. 4 OF 7 (PAGE 1)			CONTROLLER I/O BOARD AND WIRE HARNESS				37–PIN SUB–D CONNECTOR PIN–OUTS				
37–PIN			25–PIN			MAIN	STAND-BY	EXC	IPA IN	IPA OUT	LOW
CON-TROL-LER	WIRE	CIRCUIT FUNCTION	CON-TROL-LER	CON-TROL-LER	WIRE	FXI–60	FXI–60	RELAY	RELAY	RELAY	PASS
I/O BOARD	HARNESS		RMTE I/F BD	RMTE I/F BD	HAR-NESS	EXCIT-ER	EXCIT-ER	S1	S2	S3	FILTER
J5 ——— P5	WIRE NO.		J5 ——— P5		WIRE NO.	J3	J3	J1 ——— P1	J1 ——— P1	J1 ——— P1	J23
1	102–WHT	STBY EXC RF UNMUTE	12	J2–3	P2/112–WHT		14				
2	102–YEL	STBY EXC AFC UNLOCK	13	J2–4	P2/112–YEL		1				
3	104–RED	IPA IN RELAY CONTROL							2		
4	105–RED	IPA OUT RELAY CONTROL								2	
5	103–RED	EXC OUT RELAY CON-TROL	20	J3–2	P3/113–RED			2			
6	103 GRN	EXC RELAY TALLY	21	J3–3	P3/113–GRN			4			
7	104–GRN	IPA IN RELAY TALLY							4		
8	JUMPER	INTERLOCK RETURN									
9	101–RED	MAIN EXC OVER TEMP	5	J1–5	P1/111–RED	8					
10	101–YEL	MAIN EXC AFC UNLOCK	4	J1–4	P1/111–YEL	1					
11	105–GRN	IPA OUT RELAY TALLY								4	
12	101–BLU	MAIN EXC PWR CON-TROL	7	J1–7	P1/111–BLU	7					
13	102–BLU	STBY EXC PWR CON-TROL	16	J2–7	P2/112–BLU		7				
14	101–GRN	MAIN EXC FWD PWR	1	J1–4	P1/111–GRN	9					
15	101–ORN	MAIN EXC RFL PWR	2	J1–2	P1/111–ORN	10					
16	101–WHT	MAIN EXC RF UNMUTE	3	J1–3	P1/111–WHT	14					
17	106–GRN	FILTER A (1) FWD PWR									4
18	106–RED	FILTER A (1) RFL PWR									1
19	107–GRN	FILTER B (2) FWD PWR									4
20	107–RED	FILTER B (2) RFL PWR									1
21											
22											
23											
24											
25	JUMPER	INTERLOCK OUT									
26	104–BLK	+24V' TO IPA IN RELAY							1		

27	105–BLK	+24V' TO IPA OUT RELAY								1	
28	103–BLK	+24V' TO EXC RELAY	19	J3–1	P3/113–BLK			1			
29	102–GRN	STBY EXC FWD PWR	10	J2–1	P2/112–GRN		9				
30	102–ORN	STBY EXC RFL PWR	11	J2–2	P2/112–ORN		10				
31	102–RED	STBY EXC OVER TEMP	14	J2–5	P2/111–RED		8				
32	101–BLK	GND TO MAIN EXC	6	J1–6	P1/111–BLK	2, 24					
33	102–BLK	GND TO STBY EXC	15	J2–6	P2/112–BLK		2, 24				
34	106–BLK	FILTER A (1) GND RETURN									3
35	107–BLK	FILTER B (2) GND RETURN									3
36											
37											

FM–10S/FMi–703 OVERALL SCHEMATIC SHT. 5 OF 7 (PAGE 1 OF 3)				
MOTHERBOARD AND CONTROLLER MODULE CONTROL BOARD				
25–PIN SUB–D CONNECTOR PIN–OUTS				
		DATA	CONTROLLER	CONTROLLER
MOTHERBOARD CONNECTORS		CABLE	CHASSIS	MODULE CONTROL BD
J110	MOTHERBD ”A” LEFT	P110A/P1A	J1A	J1
J110	MOTHERBD ”B” RIGHT	P110B/P101B	J101B	J101
1	SELECT MODULE 9	1	1	1
2	LOGIC GND	2	2	2
3	LOGIC GND	3	3	3
4	RESET	4	4	4
5	LOGIC GND	5	5	5
6	BIAS CONTROL MODULE 7	6	6	6
7	SELECT MODULE 7	7	7	7
8	BIAS CONTROL MODULE 5	8	8	8
9	SELECT MODULE 5	9	9	9
10	PRESENCE MODULE 3A	10	10	10
11	PRESENCE MODULE 3B	11	11	11
12	SELECT MODULE 3	12	12	12
13	PRESENCE MODULE 1A	13	13	13
14	BIAS CONTROL MODULE 1	14	14	14
15	SELECT MODULE 1	15	15	15
16	BIAS CONTROL MODULE 3	16	16	16
17	PRESENCE MODULE 1B	17	17	17
18	PRESENCE MODULE 5B	18	18	18
19	PRESENCE MODULE 5A	19	19	19
20	PRESENCE MODULE 7B	20	20	20
21	PRESENCE MODULE 7A	21	21	21
22	N/C	22	22	22
23	N/C	23	23	23
24	BIAS CONTROL MODULE 9	24	24	24
25	LOGIC GND	25	25	25

FM–10S/FMi–703 OVERALL SCHEMATIC SHT. 5 OF 7 (PAGE 2 OF 3)				
MOTHERBOARD AND CONTROLLER MODULE CONTROL BOARD				
25–PIN SUB–D CONNECTOR PIN–OUTS CONTD_				
		DATA	CONTROLLER	CONTROLLER
MOTHERBOARD CONNECTORS		CABLE	CHASSIS	MODULE CONTROL BD
J111	MOTHERBD ”A” LEFT	P111A/P2A	J2A	J2
J111	MOTHERBD ”B” RIGHT	P111B/P102B	J102B	J102
1	PRESENCE MODULE 6A	1	1	1
2	BIAS CONTROL MODULE 6	2	2	2
3	PRESENCE MODULE 6B	3	3	3
4	SELECT MODULE 6	4	4	4
5	PRESENCE MODULE 8A	5	5	5
6	BIAS CONTROL MODULE 8	6	6	6
7	PRESENCE MODULE 8B	7	7	7
8	SELECT MODULE 8	8	8	8
9	TEMP SAMPLE X 5 (IPA REJ LOAD)	9	9	9
10	MODULE FORWARD POWER	10	10	10
11	MODULE TEMPERATURE	11	11	11
12	SPARE	12	12	12
13	N/C	13	13	13
14	PRESENCE MODULE 9B	14	14	14
15	MODULE CURRENT	15	15	15
16	MODULE REFLECTED POWER	16	16	16
17	PRESENCE MODULE 9A	17	17	17
18	PRESENCE MODULE 4A	18	18	18
19	BIAS CONTROL MODULE 4	19	19	19
20	PRESENCE MODULE 4B	20	20	20
21	SELECT MODULE 4	21	21	21
22	PRESENCE MODULE 2A	22	22	22
23	BIAS CONTROL MODULE 2	23	23	23
24	PRESENCE MODULE 2B	24	24	24
25	SELECT MODULE 2	25	25	25

FM–10S/FMi–703 OVERALL SCHEMATIC SHT. 5 OF 7 (PAGE 3 OF 3)			
MOTHERBOARD AND IPA SPLITER REJECT LOAD TEMPERATURE SENSOR BOARD			
4–PIN CONNECTOR PIN–OUTS			
MOTHERBOARD ”A”			TEMP SENSOR BOARD
CONNECTOR	WIRE HARNESS	CIRCUIT FUNCTION	(IPA REJECT LOAD)
J114	P114/P1		J1
1	RED	+12V	1
2	N/C	TEMP SAMPLE (.01V/DEG.C)	2
3	BLACK	TEMP SAMPLE X 5	3
4	SHIELD	GND	4

FM–10S/FMi–703 OVERALL SCHEMATIC SHT. 6 OF 7 (PAGE 1 OF 2)						
8–WAY COMBINER ”A” LEFT						
9–PIN SUB–D CONNECTOR PINOUTS						
TOP COMBINER INPUT CONTROL BOARD		RIBBON	DATA	CONTROL-LER		
9–PIN SUB–D CONNECTOR		CABLE	CABLE	CHASSIS	CONTROL-LER MOD-ULE CON-TROL BD	
J1B	8–WAY COMBINER ”A”	P1	P1AT/P3A	J3A	J3	9–PIN SUB–D CONNECTOR
1	RELAY K4 PIN 2 COIL (–) RETURN	1	1	1	1	MODULE 1 FAULT – GROUND
2	RELAY K3 PIN 2 COIL (–) RETURN	2	2	2	2	MODULE 3 FAULT – GROUND
3	RELAYS K1 THRU K4 PIN 1 COIL (+)	3	3	3	3	DC +12V TO RELAY COILS
4	RELAY K2 PIN 2 COIL (–) RETURN	4	4	4	4	MODULE 5 FAULT – GROUND
5	RELAY K1 PIN 2 COIL (–) RETURN	5	5	5	5	MODULE 7 FAULT – GROUND
6	LOGIC GROUND	6	6	6	6	LOGIC GROUND
7	LOGIC GROUND	7	7	7	7	LOGIC GROUND
8	LOGIC GROUND	8	8	8	8	LOGIC GROUND
9	LOGIC GROUND	9	9	9	9	LOGIC GROUND
BOTTOM COMBINER INPUT CONTROL BOARD		RIBBON	DATA	CONTROL-LER		
9–PIN SUB–D CONNECTOR		CABLE	CABLE	CHASSIS	CONTROL-LER MOD-ULE CON-TROL BD	
J1	8–WAY COMBINER ”A”	P1	P1AB/P4A	J4A	J4	9–PIN SUB–D CONNECTOR
1	RELAY K4 PIN 2 COIL (–) RETURN	1	1	1	1	MODULE 2 FAULT – GROUND
2	RELAY K3 PIN 2 COIL (–) RETURN	2	2	2	2	MODULE 4 FAULT – GROUND
3	RELAYS K1 THRU K4 PIN 1 COIL (+)	3	3	3	3	DC +12V TO RELAY COILS
4	RELAY K2 PIN 2 COIL (–) RETURN	4	4	4	4	MODULE 6 FAULT – GROUND
5	RELAY K1 PIN 2 COIL (–) RETURN	5	5	5	5	MODULE 8 FAULT – GROUND
6	LOGIC GROUND	6	6	6	6	LOGIC GROUND
7	LOGIC GROUND	7	7	7	7	LOGIC GROUND
8	LOGIC GROUND	8	8	8	8	LOGIC GROUND
9	LOGIC GROUND	9	9	9	9	LOGIC GROUND

FM–10S/FMi–703 OVERALL SCHEMATIC SHT. 6 OF 7 (PAGE 2 OF 2)						
8–WAY COMBINER ”B” RIGHT						
9–PIN SUB–D CONNECTOR PINOUTS						
TOP COMBINER INPUT CONTROL BOARD		RIBBON	DATA	CONTROL-LER		
9–PIN SUB–D CONNECTOR		CABLE	CABLE	CHASSIS	CONTROL-LER MOD-ULE CON-TROL BD	
J1	8–WAY COMBINER ”B”	P1	P1BT/ P103B	J103B	J103	9–PIN SUB–D CONNECTOR
1	RELAY K4 PIN 2 COIL (–) RETURN	1	1	1	1	MODULE 15 FAULT – GROUND
2	RELAY K3 PIN 2 COIL (–) RETURN	2	2	2	2	MODULE 13 FAULT – GROUND
3	RELAYS K1 THRU K4 PIN 1 COIL (+)	3	3	3	3	DC +12V TO RELAY COILS
4	RELAY K2 PIN 2 COIL (–) RETURN	4	4	4	4	MODULE 11 FAULT – GROUND
5	RELAY K1 PIN 2 COIL (–) RETURN	5	5	5	5	MODULE 9 FAULT – GROUND
6	LOGIC GROUND	6	6	6	6	LOGIC GROUND
7	LOGIC GROUND	7	7	7	7	LOGIC GROUND
8	LOGIC GROUND	8	8	8	8	LOGIC GROUND
9	LOGIC GROUND	9	9	9	9	LOGIC GROUND
BOTTOM COMBINER INPUT CONTROL BOARD		RIBBON	DATA	CONTROL-LER		
9–PIN SUB–D CONNECTOR		CABLE	CABLE	CHASSIS	CONTROL-LER MOD-ULE CON-TROL BD	
J1B	8–WAY COMBINER ”B”	P1	P1BB/P104 B	J104B	J104	9–PIN SUB–D CONNECTOR
1	RELAY K4 PIN 2 COIL (–) RETURN	1	1	1	1	MODULE 10 FAULT – GROUND
2	RELAY K3 PIN 2 COIL (–) RETURN	2	2	2	2	MODULE 12 FAULT – GROUND
3	RELAYS K1 THRU K4 PIN 1 COIL (+)	3	3	3	3	DC +12V TO RELAY COILS
4	RELAY K2 PIN 2 COIL (–) RETURN	4	4	4	4	MODULE 14 FAULT – GROUND
5	RELAY K1 PIN 2 COIL (–) RETURN	5	5	5	5	MODULE 16 FAULT – GROUND
6	LOGIC GROUND	6	6	6	6	LOGIC GROUND
7	LOGIC GROUND	7	7	7	7	LOGIC GROUND
8	LOGIC GROUND	8	8	8	8	LOGIC GROUND
9	LOGIC GROUND	9	9	9	9	LOGIC GROUND

FM–10S/FMi–703 OVERALL SCHEMATIC SHT. 7 OF 7 (PAGE 1 OF 4)			909–1010–226 / 909–0703–226
P.S. DISTRIBUTION BOARD AND P.S. HARNESS			
CONNECTOR PIN–OUTS			
P.S. DISTRIB. BOARD			5KW POWER SUPPLY
CONNECTOR	DATA CABLE	CIRCUIT FUNCTION	PS# 1 THRU PS# 5
J1 THRU J5	P1/P6 THRU P5/P10		J1
1	1	SENSE + (DC OUT SAMPLE)	1
2	2	VC+ (CONTROL VOLTAGE)	2
3	3	FAULT	3
4	4	VC_GND	4
9	9	LOGIC GND	9
10	10	CURRENT SHARE	10
13	13	P.S. INHIBIT	13
P.S. DISTRIB. BOARD			TEMP SENSOR BOARD
CONNECTOR	WIRE HARNESS	CIRCUIT FUNCTION	(INLET)
J6	P6/P15		J1
1	145	+12V	1
2	N/C	TEMP SAMPLE (.01V/DEG.C)	2
3	146	TEMP SAMPLE X 5	3
4	147	GND	4
P.S. DISTRIB. BOARD			
CONNECTOR	WIRE HARNESS	CIRCUIT FUNCTION	OCR
J8	P8		K1
1	143	OCR CONTROL (+12V)	E3
2	144	LOGIC GND	E4
P.S. DISTRIB. BOARD			
CONNECTOR	WIRE HARNESS	CIRCUIT FUNCTION	5KW POWER SUPPLY
J9	P9		PS# 1 THRU PS# 5
1	RED	SENSE + (DC OUT SAMPLE)	DC OUTPUT BUS +
2	BLACK	VC_GND	DC OUTPUT BUS –

FM–10S/FMi–703 OVERALL SCHEMATIC SHT. 7 OF 7 (PAGE 2 OF 4)			909–1010–226 / 909–0703–226
P.S. DISTRIBUTION BOARD AND P.S. HARNESS			
CONNECTOR PIN–OUTS CONTD_			
P.S. DISTRIB. BOARD			CONTROLLER
CONNECTOR	WIRE HARNESS	CIRCUIT FUNCTION	MODULE CONTROL BOARD
J10	P10/P7A		J7
1	BLACK	VC+	1
2	RED	VC GND	2
3	GREEN	P.S.FAULT 1	3
4	WHITE	LOGIC GND	4
5	BROWN	P.S.INHIBIT	5
6	BLUE	P.S.FAULT 2	6
7	ORANGE	P.S.FAULT 3	7
8	YELLOW	P.S.FAULT 4	8
9	VIOLET	P.S.FAULT 5	9
10	GRAY	TEMP SAMPLE X 5 (INLET)	10
11	PINK	HI/LO AC LINE SENSOR	11
12	TAN	OCR CONTROL (+12V)	12
13	RED/GREEN	+24V	13
14	RED/YELLOW	+48V (DC OUT SAMPLE)	14
15	RED/BLACK	+5V	15
16	WHITE/BLACK	+5V	16
17	WHITE/RED	+5V	17
18	WHITE/GREEN	GND	18
19	WHITE/YELLOW	GND	19
20	WHITE/BLUE	GND	20
21	WHITE/BROWN	GND	21
22	WHITE/ORANGE	–12V	22
23	WHITE/GRAY	–12V	23
24	WHITE/VIOLET	+12V	24
25	BLACK/RED	+12V	25

FM–10S/FMi–703 OVERALL SCHEMATIC SHT. 7 OF 7 (PAGE 3 OF 4)			909–1010–226 / 909–0703–226	
P.S. DISTRIBUTION BOARD AND P.S. HARNESS				
CONNECTOR PIN–OUTS CONTD_				
P.S. DISTRIB. BOARD				LOW VOLTAGE
CONNECTOR	WIRE HARNESS	CIRCUIT FUNCTION	WIRE HARNESS	POWER SUPPLY
J11	P11		P12	J2
1	132	+5V	132	1
2	131	+5V	131	2
3	130	+5V	130	3
4	129	GND	129	4
5	128	GND	128	5
6	127	GND	127	6
7	126	GND	126	7
8	125	+12V	125	8
9	124	+12V	124	9
10	123	GND	123	10
11	122	–12V	122	11
12	121	+24V	N/C	12
			121	13
				LOW VOLTAGE
		CIRCUIT FUNCTION	WIRE HARNESS	POWER SUPPLY
			P13	J1
		GND	136	1
			N/C	2
		AC LINE NEUTRAL	138	3
			N/C	4
		AC LINE PHASE (SWITCHED)	137	5

FM–10S/FMi–703 OVERALL SCHEMATIC SHT. 7 OF 7 (PAGE 4 OF 4)			909–1010–226 / 909–0703–226		
P.S. DISTRIBUTION BOARD AND P.S. HARNESS					
CONNECTOR PIN–OUTS CONTD_					
P.S. DISTRIB. BOARD	DATA CABLE		MOTHERBOARD ”A”/”C’ OR ”B”/”D”		
CONNECTOR	P12/P201A OR	CIRCUIT FUNCTION	DC CONNECTOR BOARD		MOTHER-BOARD
J12 OR J13	P13/P201B		J201	J202	J115
1	1	+12V	1	1	1
2	2	+12V	2	2	2
3	3	N/C	3	4	4
4	4	–12V	4	6	6
5	5	+5V	5	9	9
6	6	+12V	6	3	3
7	7	N/C	7	5	5
8	8	–12V	8	7	7
9	9	–12V	9	8	8
SHELL	SHIELD	CHASSIS GND	CHASSIS GND	10	10
POWER SUPPLY HARNESS		CIRCUIT FUNCTION	AC LINE FAULT IND. BOARD		
CONNECTOR P1	WIRE NO.		J1		
1	240	LOSS OF AC LINE PHASE 1	1		
2	241	LOGIC GND	2		
3			3		
4			4		
5			5		
6			6		

REVISIONS					
REV	DATE	DESCRIPTION	DRAFTER	APPROVED	ECN

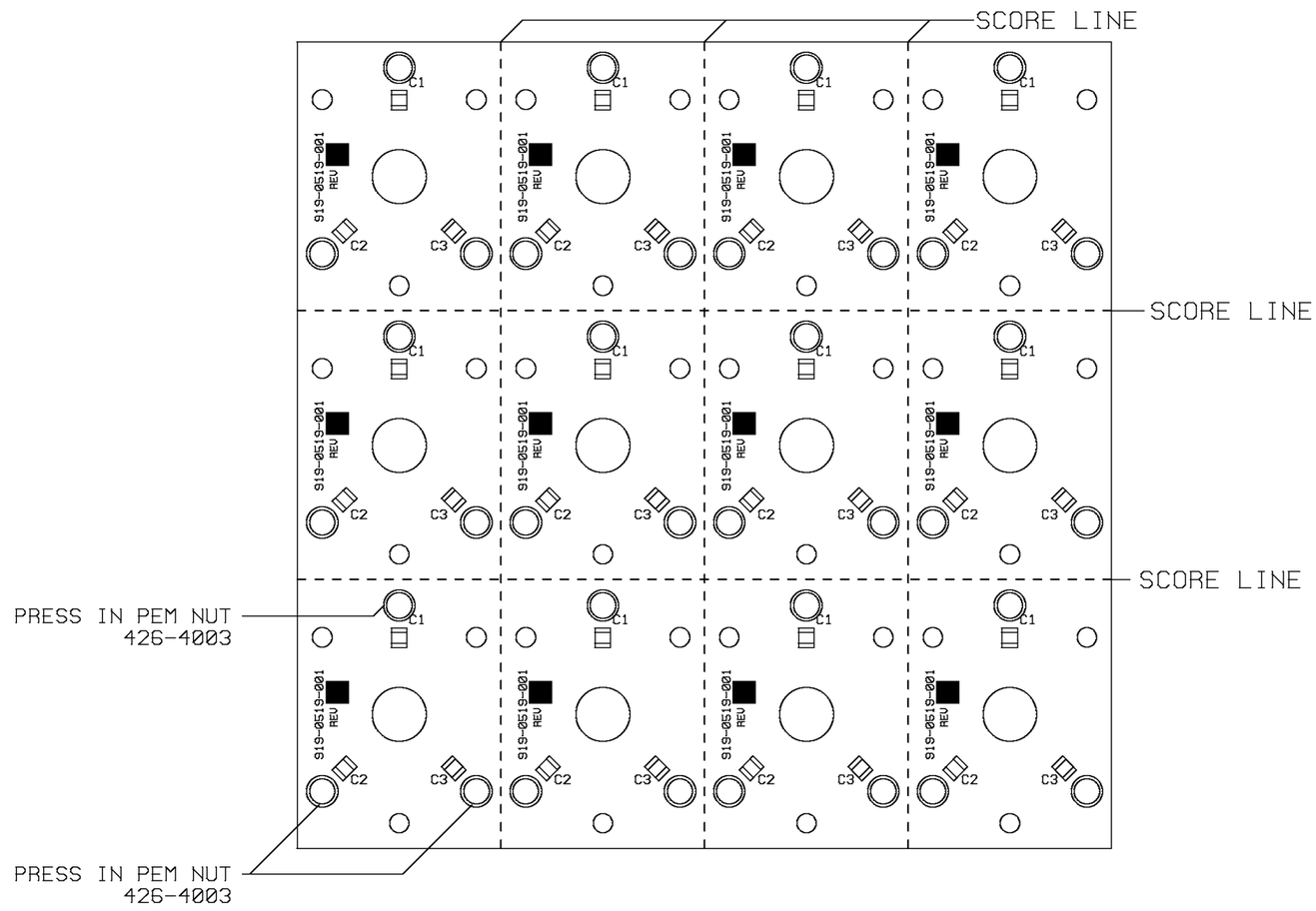

TOLERANCE (DECIMAL) U.O.S.
.X ± .030 .XXX ± .005
.XX ± .015 ANGLES + 1°

DWN. BY KWT 4-12-00
DESIGNER(S) RPM 9-29-00
PROJ. LEADER MBS 9-29-00
MFG.

MATERIAL SEE BOM 919-0519-001
FINISH
NEXT ASSY.

BROADCAST ELECTRONICS INC.
4100 N. 24TH ST. P.O.BOX 3606 QUINCY,IL. 62305
217/224-9600 FAX 217/224-9607

TITLE DC FILTER

TYPE	SIZE	DWG No.	REV
A	B	919-0519/-001	A

MODEL FM-10S/AM-10E SCALE 1/1 SHEET 1 OF 1

REVISIONS				
REV	DATE	DRAFTER	APPROVED	ECN

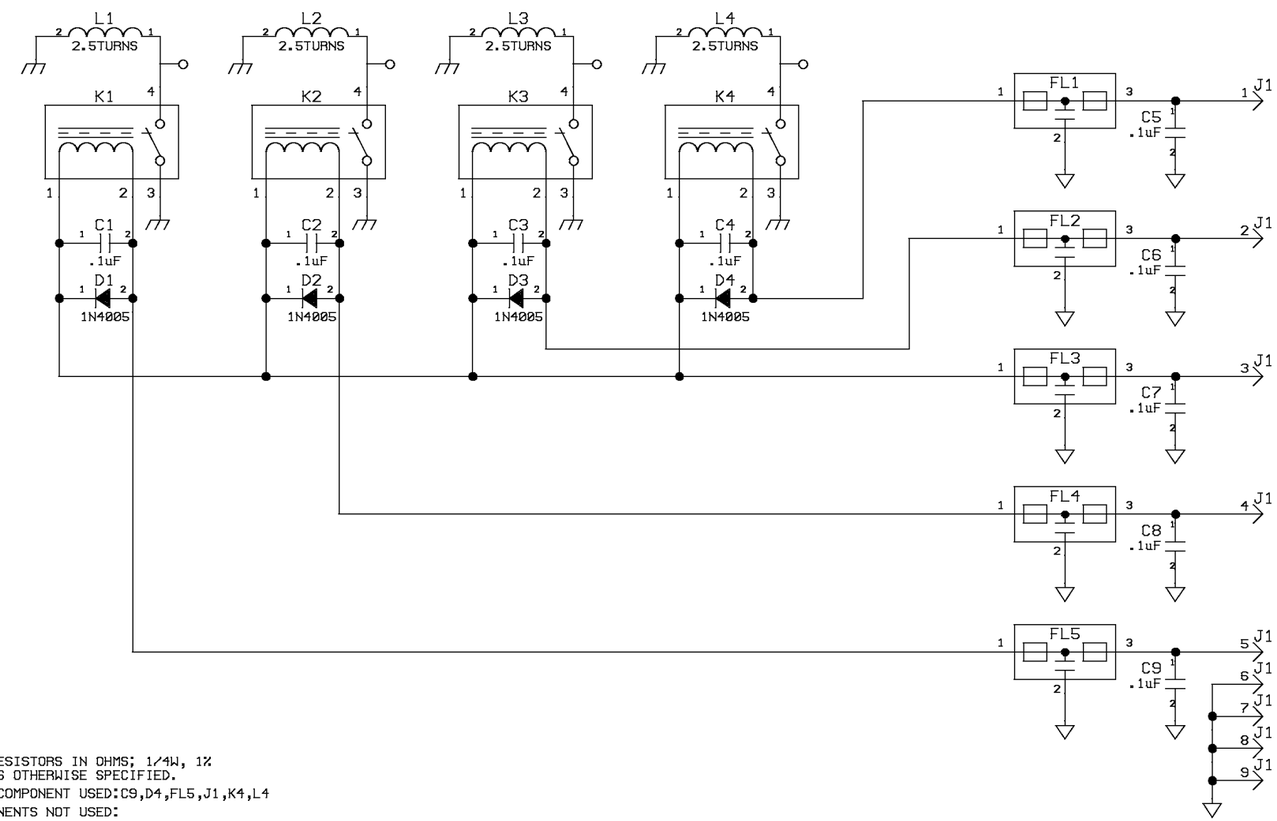

NOTES:

1. ALL RESISTORS IN OHMS; 1/4W, 1%
   UNLESS OTHERWISE SPECIFIED.
2. LAST COMPONENT USED:C9,D4,FL5,J1,K4,L4
3. COMPONENTS NOT USED:
4. SEE ASSEMBLY:AC919-0502-001/002

TOLERANCE (DECIMAL) U.O.S.
.x ± .030 .xxx ± .005
.xx ± .015 ANGLES ± 1°

DWN. BY 6-12-98
K. TERWELP

DESIGNER(S)

PROJ. LEADER

MFG.

MATERIAL
SEE BOM
919-0502

FINISH

NEXT ASSY.

BROADCAST ELECTRONICS INC.
4100 N. 24TH ST., P.O.BOX 3606 QUINCY, IL. 62305
217/224-9600 FAX 217/224-9607

TITLE
COMBINER INPUT PCB

TYPE	SIZE	DWG. NO.	REV
S	B	919-0502	A

MODEL FM10C | SCALE NONE | SHEET 1 OF 1

REVISIONS					
REV	DATE	DESCRIPTION	DRAFTER	APPROVED	ECN

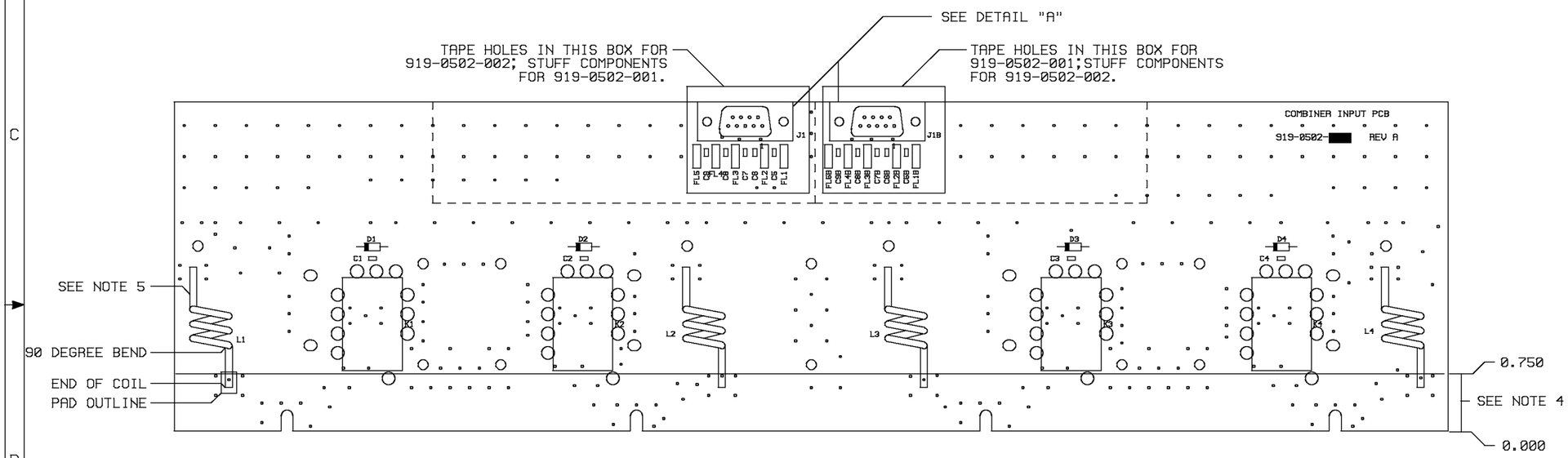

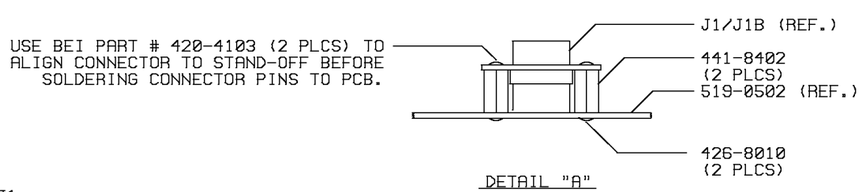

DETAIL "A"

NOTES:

1) STUFF C5-C9,FL1-FL5 & J1 FOR -001.
2) STUFF C5B-C9B, FL1B-FL5B & J1B FOR -002.
3) TAPE ALL HOLES LARGER THAN .100" DIA, BEFORE FLOW SOLDER.
4) TAPE AREA MARKED BEFORE FLOW SOLDER .
5) POSITION COILS L1 THRU L4 IN THE CENTER BETWEEN PADS ON TOP OF SILKSCREENED OUTLINE AND ALIGN 90 DEGREE BENDS AS SHOWN.

TOLERANCE (DECIMAL) U.O.S.
.X ± .030 .XXX ± .005
.XX ± .015 ANGLES ± 1°

DWN. BY 6-12-98
K. TERWELP
DESIGNER(S)
PROJ. LEADER
MBS 9-29-00
MFG.

MATERIAL
SEE BOMS
919-0502-001
919-0502-002
FINISH
NEXT ASSY.

BROADCAST ELECTRONICS INC.
4100 N. 24TH ST. P.O.BOX 3686 QUINCY,IL. 62305
217/224-9600 FAX 217/224-9607

TITLE
ASSY, COMBINER INPUT PCB

TYPE	SIZE	DWG No.	REV
A	C	919-0502-001/002	A

MODEL FM-10C SCALE 1/1 SHEET 1 OF 1

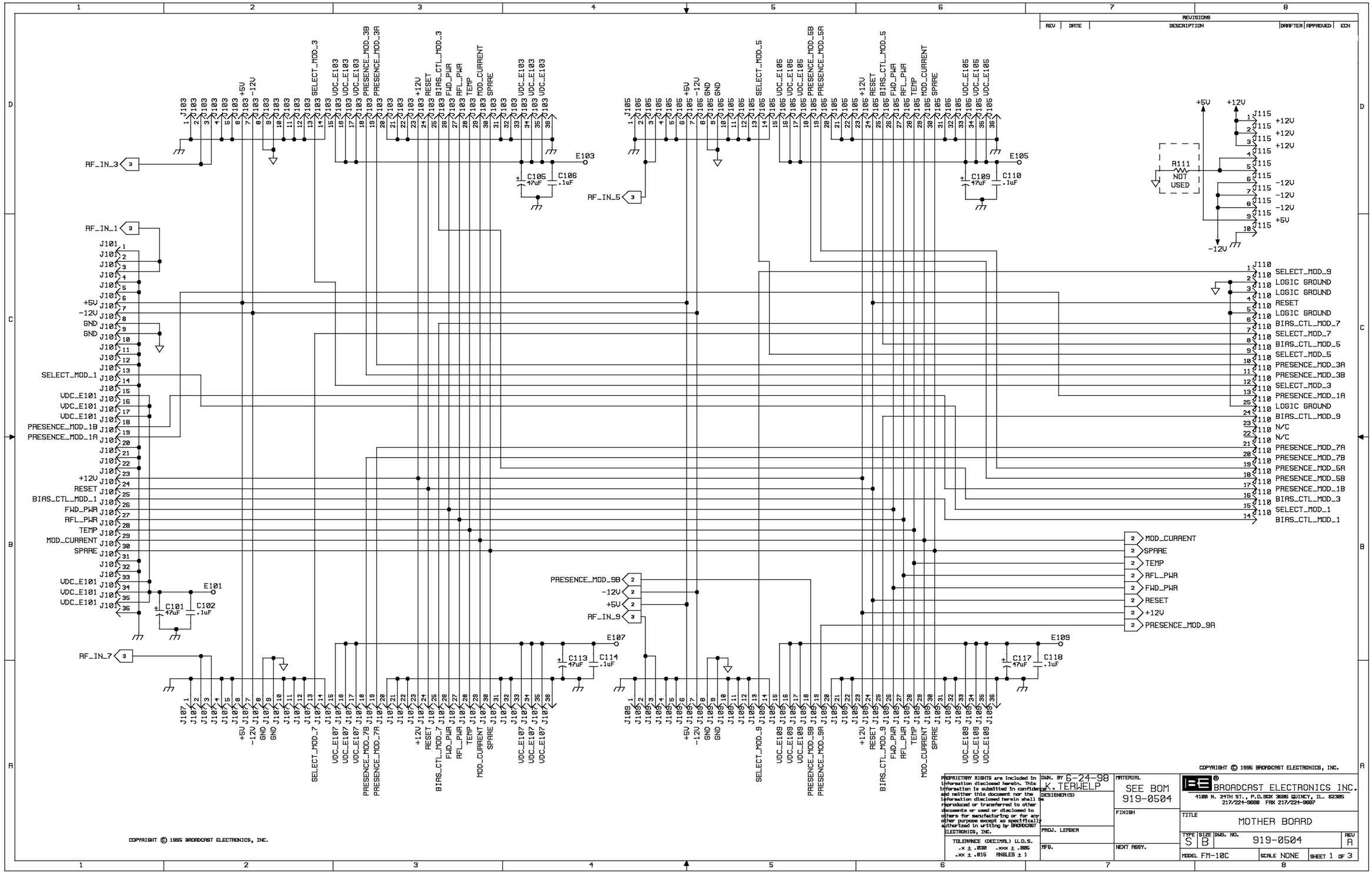
REVISIONS
REV
DATE
DESCRIPTION
DRAFTER
APPROVED
ECN
RF_IN_3
RF_IN_5
RF_IN_1
RF_IN_7
E103
E105
E101
E107
E109
C105 47uF
C106 .1uF
C109 47uF
C110 .1uF
C101 47uF
C102 .1uF
C113 47uF
C114 .1uF
C117 47uF
C118 .1uF
R111 NOT USED
+5V
+12V
-12V
GND
SELECT_MOD_1
VDC_E101
PRESENCE_MOD_1B
PRESENCE_MOD_1A
RESET
BIAS_CTL_MOD_1
FWD_PWR
RFL_PWR
TEMP
MOD_CURRENT
SPARE
PRESENCE_MOD_9B
RF_IN_9
SELECT_MOD_9
LOGIC GROUND
BIAS_CTL_MOD_7
SELECT_MOD_7
BIAS_CTL_MOD_5
SELECT_MOD_5
PRESENCE_MOD_3A
PRESENCE_MOD_3B
SELECT_MOD_3
PRESENCE_MOD_1A
BIAS_CTL_MOD_9
N/C
PRESENCE_MOD_7A
PRESENCE_MOD_7B
PRESENCE_MOD_5A
PRESENCE_MOD_5B
PRESENCE_MOD_1B
BIAS_CTL_MOD_3
SELECT_MOD_1
BIAS_CTL_MOD_1
MOD_CURRENT
SPARE
TEMP
RFL_PWR
FWD_PWR
RESET
+12V
PRESENCE_MOD_9A
COPYRIGHT © 1995 BROADCAST ELECTRONICS, INC.
PROPRIETARY RIGHTS are included in information disclosed herein. This information is submitted in confidence and neither this document nor the information disclosed herein shall be reproduced or transferred to other documents or used or disclosed to others for manufacturing or for any other purpose except as specifically authorized in writing by BROADCAST ELECTRONICS, INC.
TOLERANCE (DECIMAL) U.O.S.
.x ± .030 .xxx ± .005
.xx ± .015 ANGLES ± 1
DWN. BY 6-24-98
K. TERWELP
DESIGNER(S)
PROJ. LEADER
MFG.
MATERIAL
SEE BOM
919-0504
FINISH
NEXT ASSY.
BROADCAST ELECTRONICS INC.
4100 N. 24TH ST., P.O.BOX 3686 QUINCY, IL. 62305
217/224-9600 FAX 217/224-9687
TITLE
MOTHER BOARD
TYPE S
SIZE B
DWG. NO. 919-0504
REV A
MODEL FM-10C
SCALE NONE
SHEET 1 OF 3

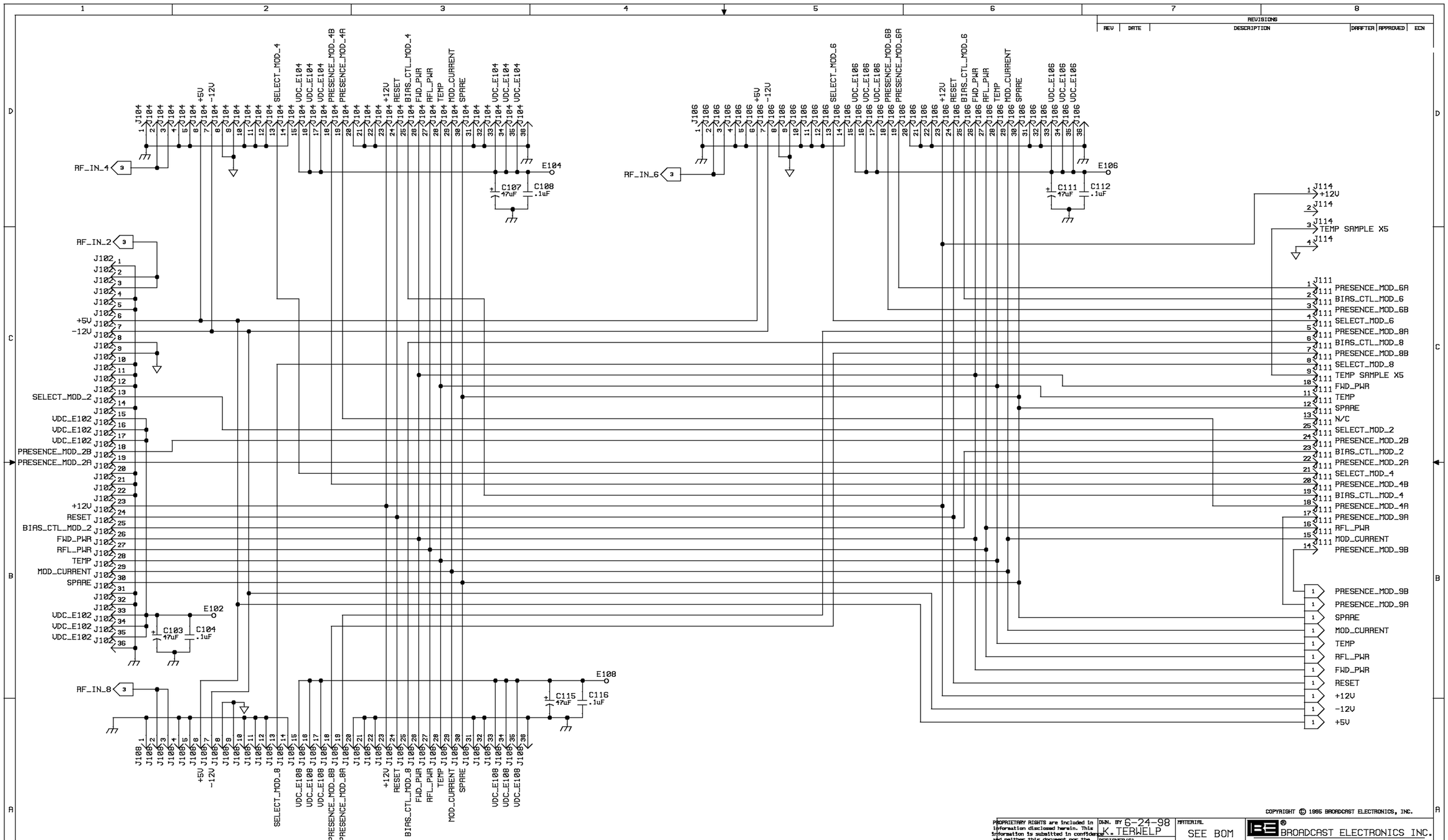
REVISIONS
REV DATE DESCRIPTION DRAFTER APPROVED ECN
RF_IN_4
RF_IN_6
RF_IN_2
RF_IN_8
E104
E106
E102
E108
C107 47uF
C108 .1uF
C111 47uF
C112 .1uF
C103 47uF
C104 .1uF
C115 47uF
C116 .1uF
J114
+12V
TEMP SAMPLE X5
J111
PRESENCE_MOD_6A
BIAS_CTL_MOD_6
PRESENCE_MOD_6B
SELECT_MOD_6
PRESENCE_MOD_8A
BIAS_CTL_MOD_8
PRESENCE_MOD_8B
SELECT_MOD_8
TEMP SAMPLE X5
FWD_PWR
TEMP
SPARE
N/C
SELECT_MOD_2
PRESENCE_MOD_2B
BIAS_CTL_MOD_2
PRESENCE_MOD_2A
SELECT_MOD_4
PRESENCE_MOD_4B
BIAS_CTL_MOD_4
PRESENCE_MOD_4A
PRESENCE_MOD_9A
RFL_PWR
MOD_CURRENT
PRESENCE_MOD_9B
PRESENCE_MOD_9B
PRESENCE_MOD_9A
SPARE
MOD_CURRENT
TEMP
RFL_PWR
FWD_PWR
RESET
+12V
-12V
+5V
COPYRIGHT © 1995 BROADCAST ELECTRONICS, INC.
PROPRIETARY RIGHTS are included in information disclosed herein. This information is submitted in confidence and neither this document nor the information disclosed herein shall be reproduced or transferred to other documents or used or disclosed to others for manufacturing or for any other purpose except as specifically authorized in writing by BROADCAST ELECTRONICS, INC.
TOLERANCE (DECIMAL) U.O.S.
.X ± .030 .XXX ± .005
.XX ± .015 ANGLES ± 1
DWN. BY 6-24-98
K. TERWELP
DESIGNER(S)
PROJ. LEADER
MFG.
MATERIAL
SEE BOM
919-0504
FINISH
NEXT ASSY.
BROADCAST ELECTRONICS INC.
4100 N. 24TH ST., P.O.BOX 3606 QUINCY, IL. 62305
217/224-9600 FAX 217/224-9687
TITLE
MOTHER BOARD
TYPE S SIZE B DWG. NO. 919-0504 REV A
MODEL FM-10C SCALE NONE SHEET 2 OF 3
COPYRIGHT © 1995 BROADCAST ELECTRONICS, INC.

REVISIONS					
REV	DATE	DESCRIPTION	DRAFTER	APPROVED	ECN

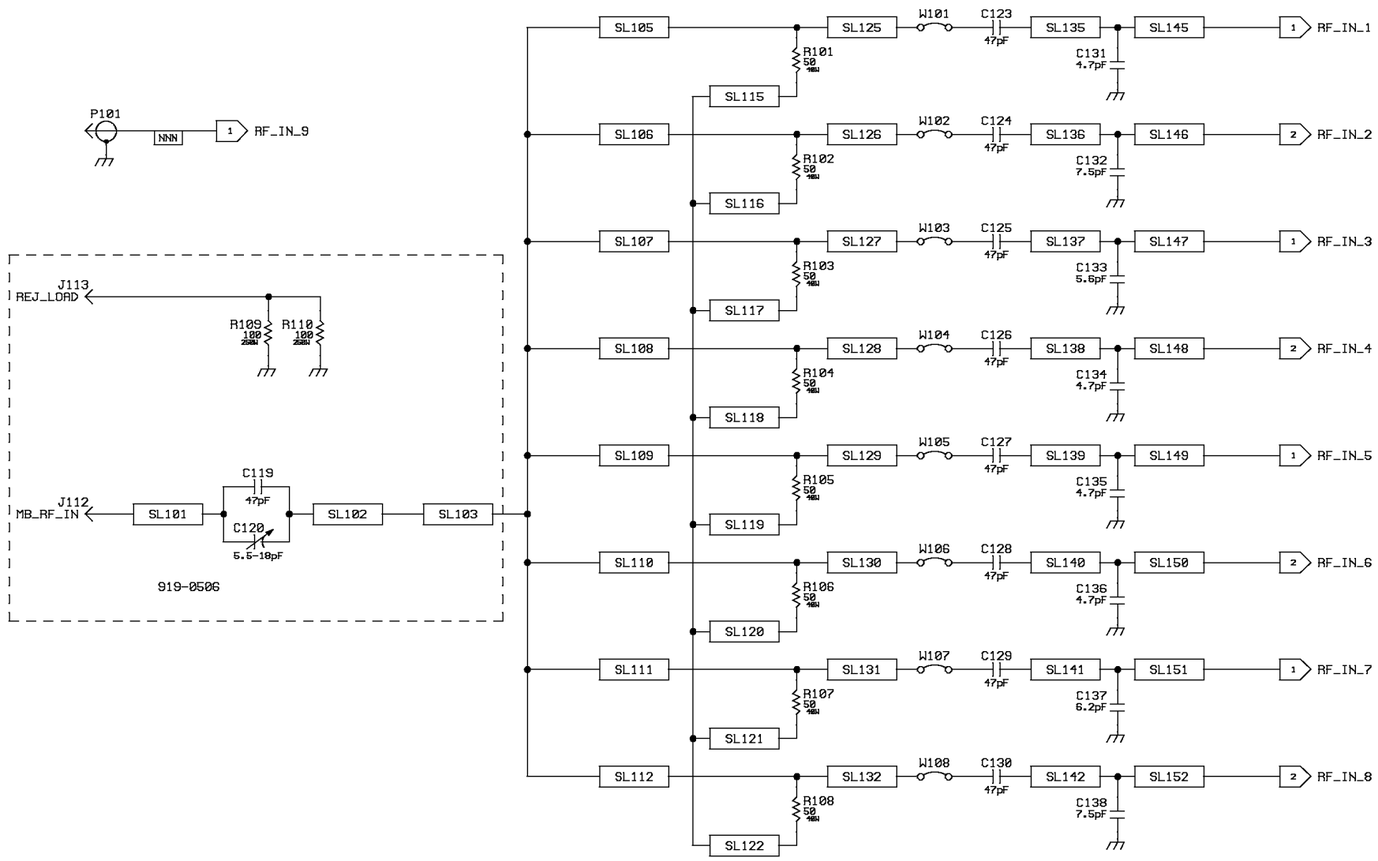

NOTES:
1. ALL RESISTORS IN OHMS: 1/4W, 1% UNLESS OTHERWISE SPECIFIED.
2. LAST COMPONENT USED:C138,E109,J115, P101,R111,W108
3. COMPONENTS NOT USED: C121,C122
4. SEE ASSEMBLYS:AD919-0504, AB919-0506
5. SL105-SL112 = .048 X 17.00
   SL115-SL122 = .150 X .70
   SL125-SL132 = .031 X 1.00
   SL135-SL142 = .030 X 1.10
   SL145-SL152 = .080 X 14.00

TOLERANCE (DECIMAL) U.O.S.
.x ± .030 .xxx ± .005
.xx ± .015 ANGLES ± 1°

DWN. BY 6-24-98 K. TERWELP
DESIGNER(S)
PROJ. LEADER
MFG.

MATERIAL SEE BOMS 919-0504 919-0506
FINISH
NEXT ASSY.

BROADCAST ELECTRONICS INC.
4100 N. 24TH ST., P.O.BOX 3686 QUINCY, IL. 62305
217/224-9600 FAX 217/224-9607

TITLE MOTHER BOARD

TYPE	SIZE	DWG. NO.	REV
S	B	919-0504	A

MODEL FM-10C SCALE NONE SHEET 3 OF 3

REVISIONS					
REV	DATE	DESCRIPTION	DRAFTER	APPROVED	ECN

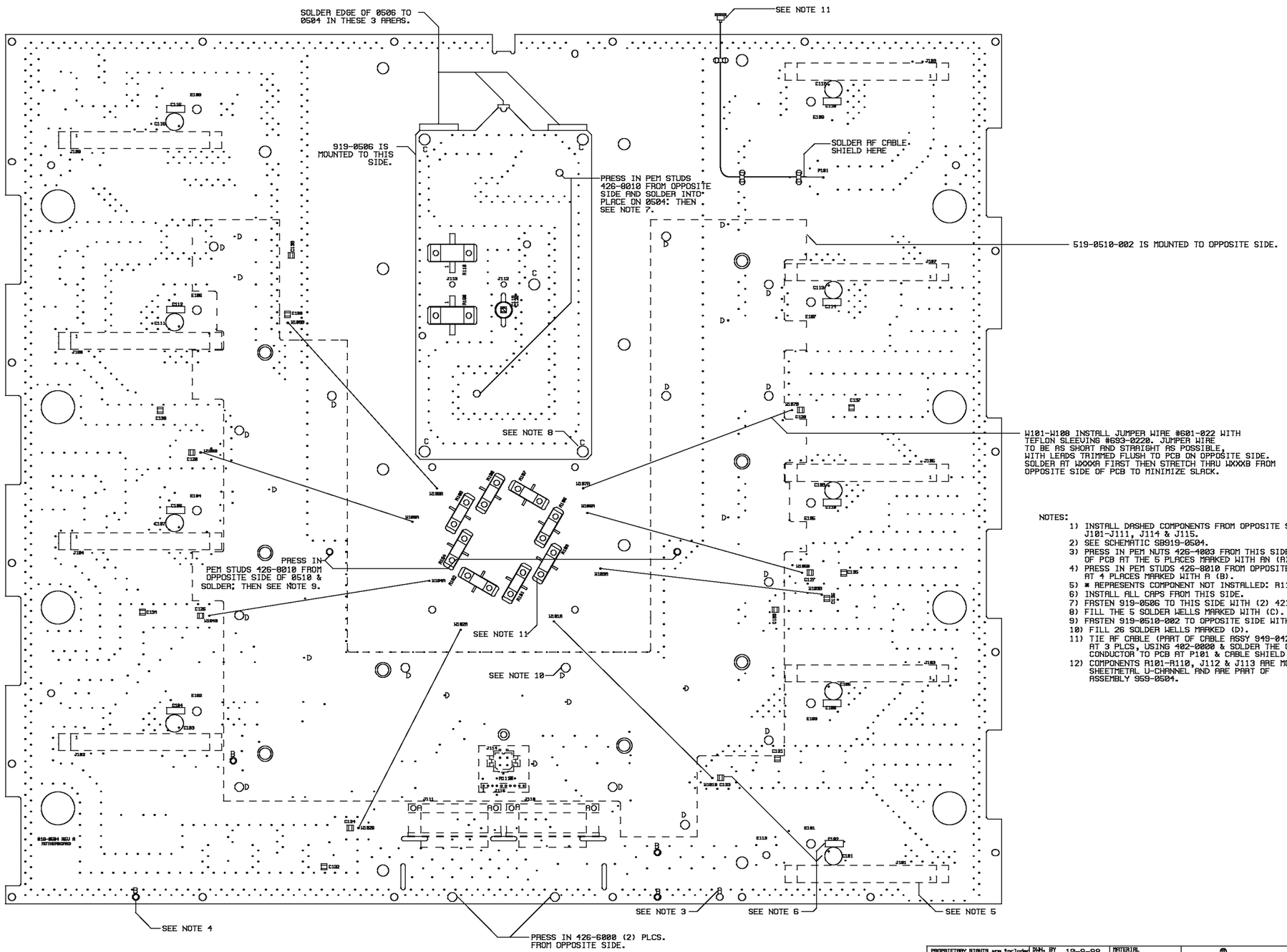

NOTES:

1) INSTALL DASHED COMPONENTS FROM OPPOSITE SIDE: J101-J111, J114 & J115.
2) SEE SCHEMATIC SB919-0504.
3) PRESS IN PEM NUTS 426-4003 FROM THIS SIDE OF PCB AT THE 5 PLACES MARKED WITH AN (A).
4) PRESS IN PEM STUDS 426-8010 FROM OPPOSITE SIDE AT 4 PLACES MARKED WITH A (B).
5) * REPRESENTS COMPONENT NOT INSTALLED: R111
6) INSTALL ALL CAPS FROM THIS SIDE.
7) FASTEN 919-0506 TO THIS SIDE WITH (2) 421-4008.
8) FILL THE 5 SOLDER WELLS MARKED WITH (C).
9) FASTEN 919-0510-002 TO OPPOSITE SIDE WITH (2) 421-4008.
10) FILL 26 SOLDER WELLS MARKED (D).
11) TIE RF CABLE (PART OF CABLE ASSY 949-0427) AT 3 PLCS, USING 402-0000 & SOLDER THE CENTER CONDUCTOR TO PCB AT P101 & CABLE SHIELD AS SHOWN.
12) COMPONENTS R101-R110, J112 & J113 ARE MOUNTED TO THE SHEETMETAL U-CHANNEL AND ARE PART OF ASSEMBLY 959-0504.

TOLERANCE (DECIMAL) U.O.S.
.X ± .030 .XXX ± .005
.XX ± .010 ANGLES ± 1°

DWN. BY 10-9-98 K. TERWELP
DESIGNER(S)
PROJ. LEADER MBS 9-29-00
MFG.

MATERIAL
FINISH
NEXT ASSY.

BROADCAST ELECTRONICS INC.
4100 N. 24TH ST. P.O.BOX 3808 QUINCY,IL. 62305
217/224-9600 FAX 217/224-9687

TITLE ASSEMBLY, MOTHERBOARD

TYPE	SIZE	DWG No.	REV
A	D	919-0504	A

MODEL FM-10S | PRINTED SCALE | SHEET 1 OF 1

REVISIONS				
REV	DATE	DRAFTER	APPROVED	ECN

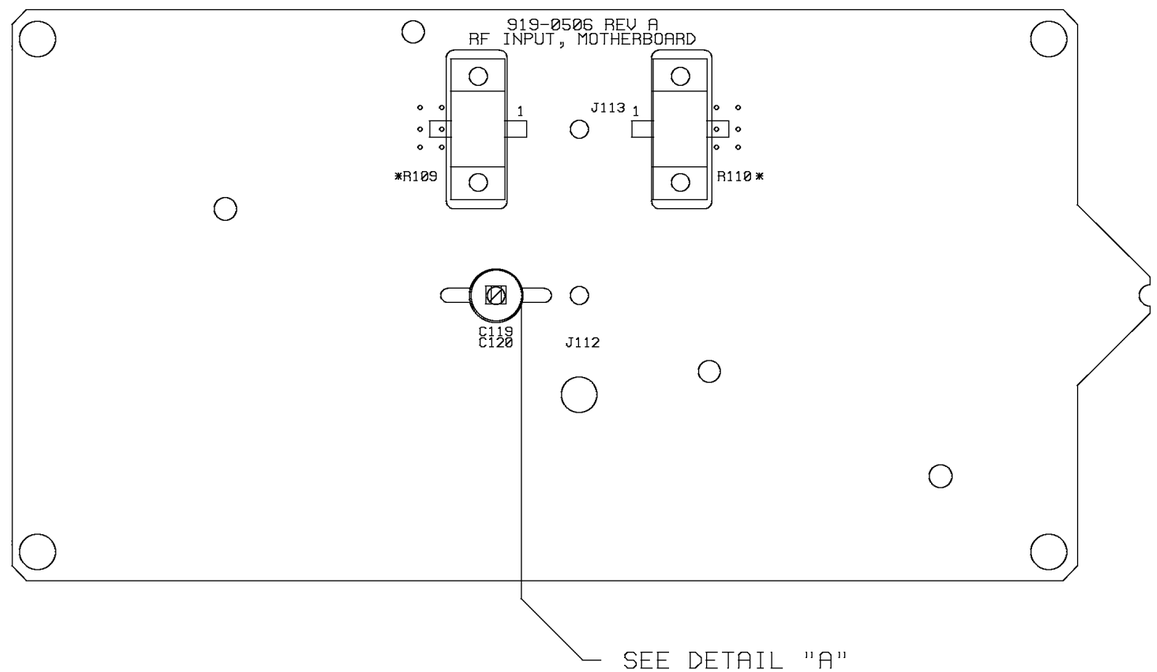

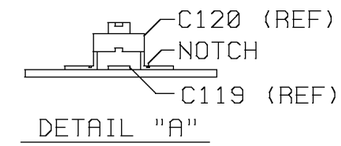

NOTES:

1) SOLDER C119 IN PLACE.
2) SOLDER C120 WITH ARROW UP FACING J112.
3) * R109 & R110 ARE PART OF ASSY. 959-0504-001
4) * FOR R109 & R110 PIN 1 IS ALWAYS USED.
5) SEE SCHEMATIC SB919-0504.

TOLERANCE (DECIMAL) U.O.S.
.X ± .030 .XXX ± .005
.XX ± .015 ANGLES + 1°

DWN. BY 11-3-98
K. TERWELP

DESIGNER(S)

PROJ. LEADER

MFG.

MATERIAL
SEE BOM
919-0506

FINISH

NEXT ASSY.

BROADCAST ELECTRONICS INC.
4100 N. 24TH ST. P.O.BOX 3606 QUINCY,IL. 62305
217/224-9600 FAX 217/224-9607

TITLE
RF INPUT, MOTHER BOARD

TYPE	SIZE	DWG No.	REV
A	B	919-0506	A

MODEL FM-10S | SCALE 1/1 | SHEET 1 OF 1

REVISIONS					
REV	DATE	DESCRIPTION	DRAFTER	APPROVED	ECN

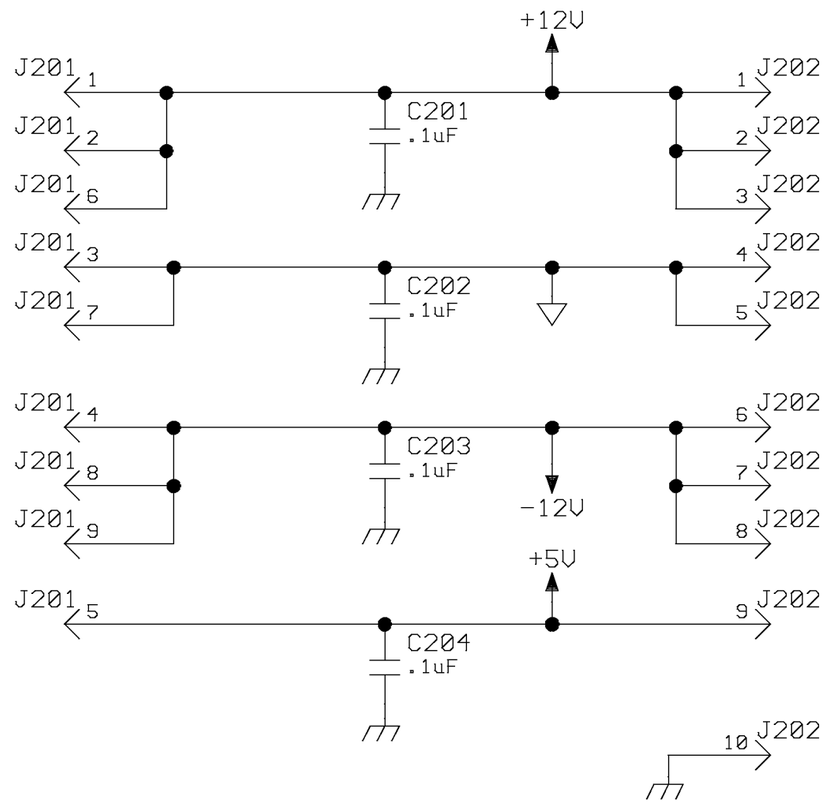

NOTES:

1. LAST COMPONENT USED:C204,J202
2. COMPONENTS NOT USED:C1-C200, J1-J200
3. SEE ASSEMBLY:AC919-0510

TOLERANCE (DECIMAL) U.O.S.
.x ± .030 .xxx ± .005
.xx ± .015 ANGLES ± 1°

DWN. BY KWT 2-18-99
DESIGNER(S)
PROJ. LEADER
MFG.

MATERIAL SEE BOM 919-0510-001
FINISH
NEXT ASSY. 919-0510

BROADCAST ELECTRONICS INC.
4100 N. 24TH ST., P.O.BOX 3606 QUINCY, IL. 62305
217/224-9600 FAX 217/224-9607

TITLE MOTHER BOARD DC CONNECTOR

TYPE	SIZE	DWG. NO.	REV
S	B	919-0510-001	A

MODEL FM10SS | SCALE NONE | SHEET 1 OF 1

REVISIONS					
REV	DATE	DESCRIPTION	DRAFTER	APPROVED	ECN

NOTES:

1) STUFF J201 & C201-C204 ON SOLDER SIDE OF PCB.
2) ✱ DESIGNATES PARTS NOT STUFFED.

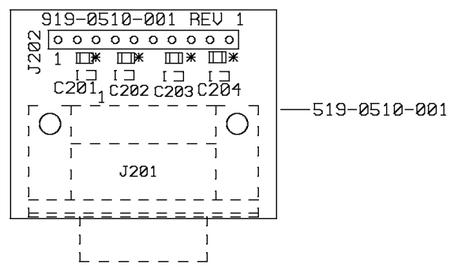

TOLERANCE (DECIMAL) U.O.S.
.X ± .030 .XXX ± .005
.XX ± .015 ANGLES + 1°

DWN. BY 5-27-99
K. TERWELP

DESIGNER(S)

PROJ. LEADER

MFG.

MATERIAL
SEE BOM
919-0510-001

FINISH

NEXT ASSY.

BROADCAST ELECTRONICS INC.
4100 N. 24TH ST. P.O.BOX 3606 QUINCY,IL. 62305
217/224-9600 FAX 217/224-9607

TITLE
MOTHERBOARD DC CONNECTOR

TYPE	SIZE	DWG No.	REV
A	A	919-0510-001	A

MODEL FM10S | SCALE 1/1 | SHEET 1 OF 1

REV	DATE	DESCRIPTION	DRAFTER	APPROVED	ECN
A	9-29-00	ADDED R11 & R12: ENGINEERING RELEASE	KT		10367

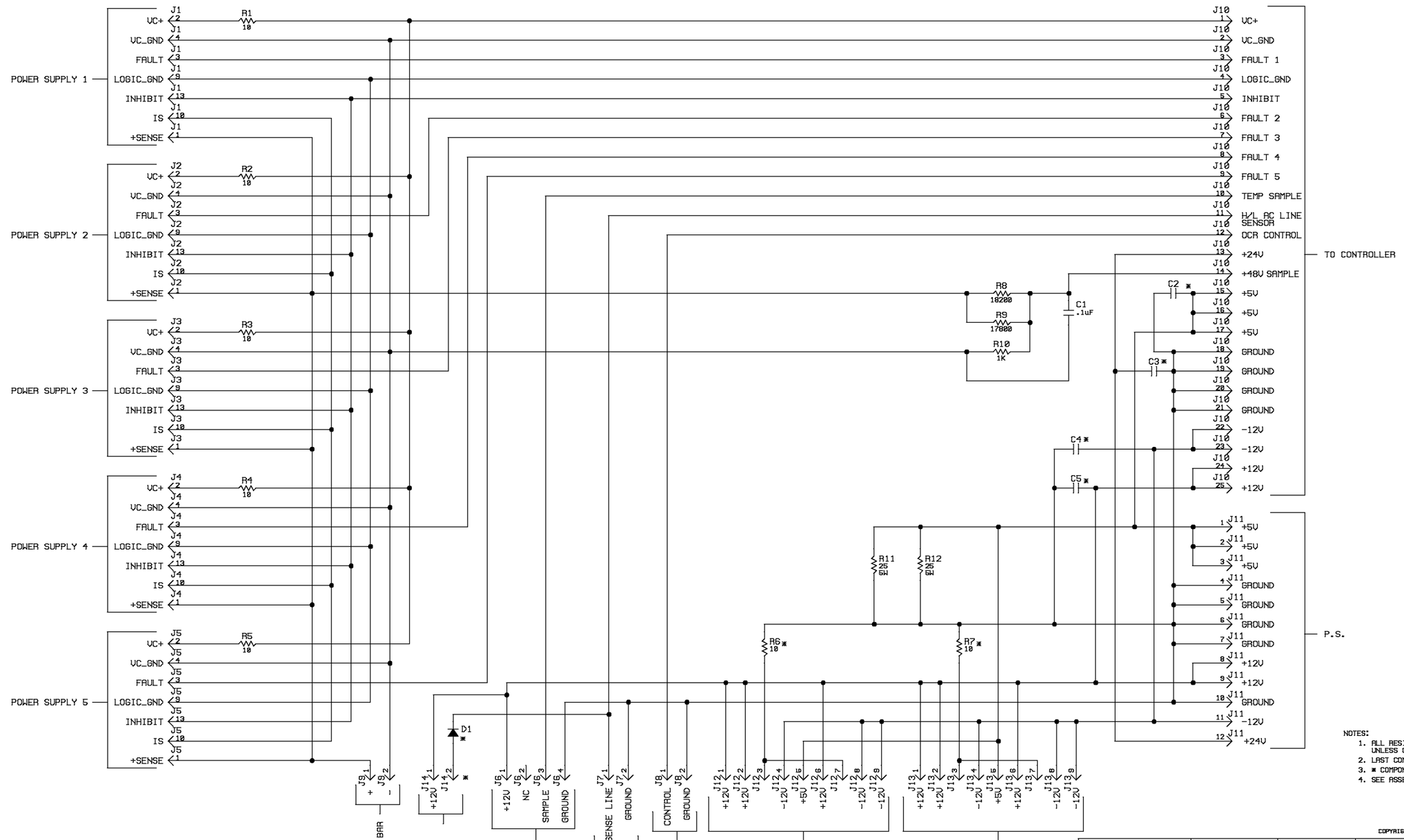

NOTES:
1. ALL RESISTORS IN OHMS; 1/4W, 1% UNLESS OTHERWISE SPECIFIED.
2. LAST COMPONENT USED:C5,D1,J14,R12
3. * COMPONENTS NOT USED:C2-C5,D1,J14,R6,R7
4. SEE ASSEMBLY:AC919-0511

TOLERANCE (DECIMAL) U.O.S.
.X ± .030 .XXX ± .005
.XX ± .015 ANGLES ± 1

DWN. BY KWT 3-5-99
DESIGNER(S) RPM 9-29-00
PROJ. LEADER MBS 9-29-00
MFG.
MATERIAL
FINISH
NEXT ASSY. AC919-0511

BROADCAST ELECTRONICS INC.
4100 N. 24TH ST., P.O.BOX 3606 QUINCY, IL. 62305
217/224-9600 FAX 217/224-9607

TITLE P.S. DIST. PCB

TYPE	SIZE	DWG. NO.	REV
S	B	919-0511	A

MODEL NNNN SCALE NONE SHEET 1 OF 1

REVISIONS					
REV	DATE	DESCRIPTION	DRAFTER	APPROVED	ECN

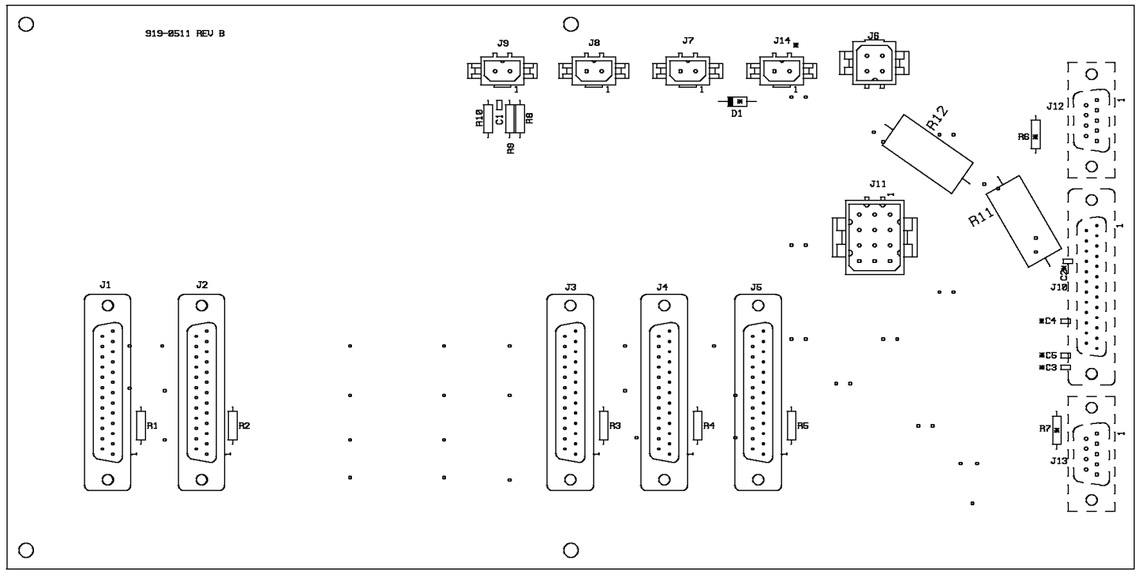

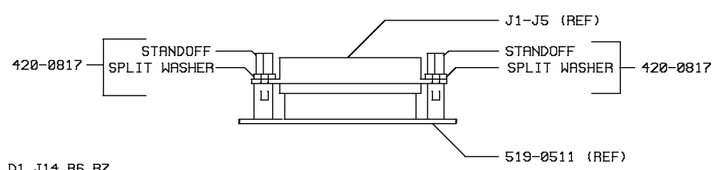

DETAIL"A"

NOTES:
1) * COMPONENTS ARE NOT STUFFED: C2-C5,D1,J14,R6,R7
2) DASHED COMPONENTS ARE STUFFED ON SOLDER SIDE.

TOLERANCE (DECIMAL) U.O.S.
.X ± .030 .XXX ± .005
.XX ± .015 ANGLES ± 1°

DWN. BY KWT 2-15-99
DESIGNER(S) RPM 9-29-00
PROJ. LEADER RPM 9-29-00
MFG.

MATERIAL SEE BOM 919-0511
FINISH
NEXT ASSY.

BROADCAST ELECTRONICS INC.
4100 N. 24TH ST. P.O.BOX 3606 QUINCY,IL. 62305
217/224-9600 FAX 217/224-9607

TITLE P.S. DIST. PCB

TYPE	SIZE	DWG No.	REV
A	C	919-0511	B

MODEL FM-10S SCALE 1/1 SHEET 1 OF 1

COPYRIGHT © 1999 BROADCAST ELECTRONICS, INC.

REV	DATE	DESCRIPTION	DRAFTER	APPROVED	ECN
B	9-25-00	CHGD U2 TO A 80C32; SEE SHEET 4 ALSO	KT		10357
D	8-9-01	ADDED R58, SEE PAGE 4 ALSO	KT		10498

REVISIONS

REV	DATE	DESCRIPTION	DRAFTER	APPROVED	ECN
1	3-29-99	PROTOTYPE RELEASE.	KT		----
2	9-23-99	SEVERAL PROTOTYPE CHANGES ON ALL SHEETS.	KT		----
3	5-5-00	CHGD U7, HOOKED UP U5-1 & U7-3;MODEL RELEASE	KT	JLT	----
A	8-9-00	SEE SHEET 5; ENGINEERING RELEASE.	KT		10339

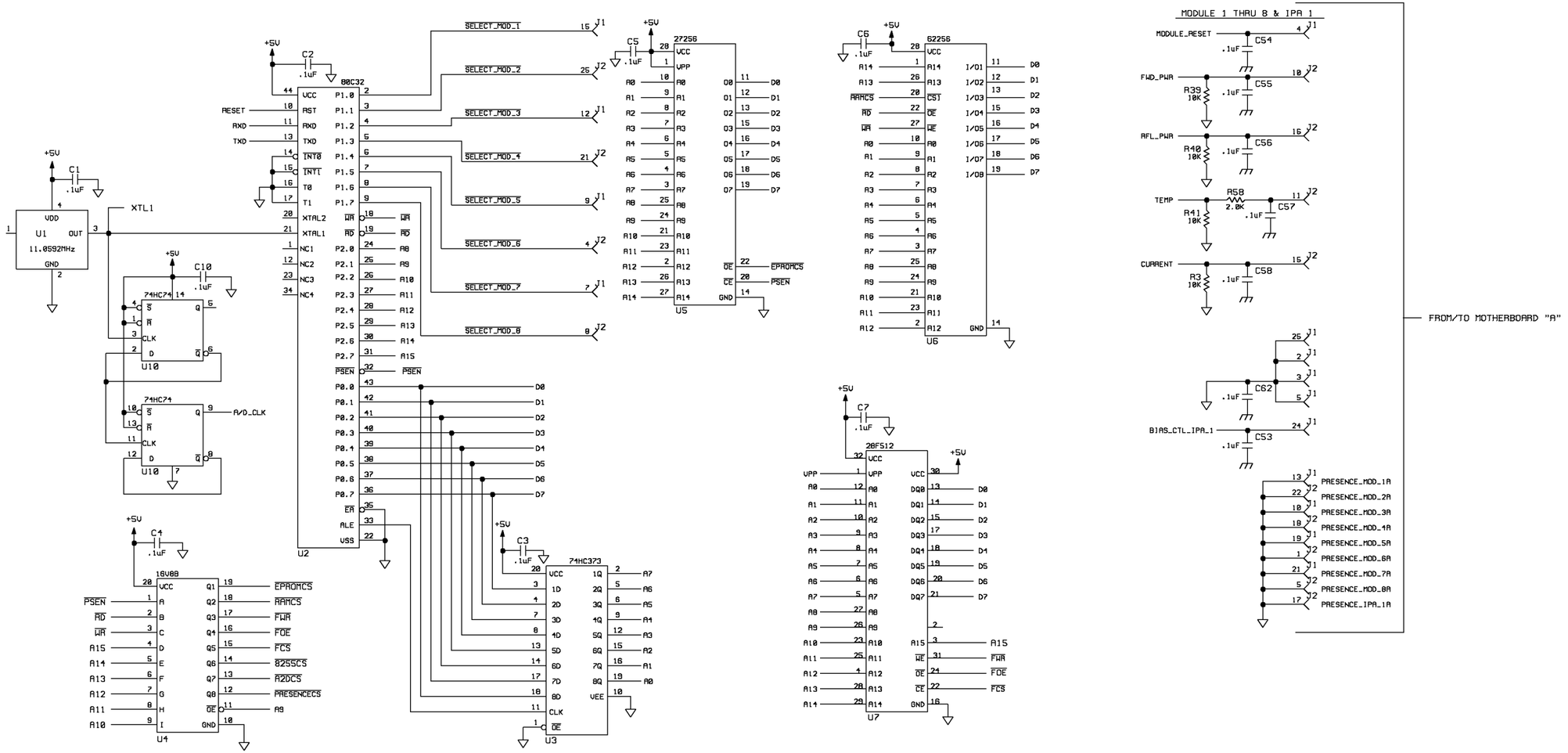

NOTES:

1. ALL RESISTORS IN OHMS: 1/4W, 1% UNLESS OTHERWISE SPECIFIED.
2. LAST COMPONENT USED:C203,D2,DS109,J105, Q102,R158,TP109,U118
3. COMPONENTS NOT USED:C44,C100,C144,C180,C181,C177-C199, DS10-DS100,DS102-DS108,J9-J100,Q4-Q100,R59-R102,TP18-TP100, U19-U101,U110,U111
4. SEE ASSEMBLY:AC919-0515

TOLERANCE (DECIMAL) U.O.S.
.x ± .030 .xxx ± .005
.xx ± .015 ANGLES ± 1

DWN. BY KWT 3-29-99
DESIGNER(S) JIM L. TUCKER
PROJ. LEADER
MFG.

MATERIAL SEE BOM 919-0515
FINISH
~~SEE DWG AA502-0000~~
NEXT ASSY.

BROADCAST ELECTRONICS INC.
4100 N. 24TH ST., P.O.BOX 3686 QUINCY, IL. 62305 217/224-9600
TELEX 258142 CABLE BROADCAST FAX 217/224-9687

TITLE MODULE CONTROL

TYPE	SIZE	DWG. NO.	REV
S	B	919-0515	D

MODEL FM-10S SCALE NONE SHEET 1 OF 6

REVISIONS					
REV	DATE	DESCRIPTION	DRAFTER	APPROVED	ECN
1	3-29-99	PROTOTYPE RELEASE.	KT		----
C	10-24-00	ADDED D2, CHGD NET FOR J5/6	KT		10369

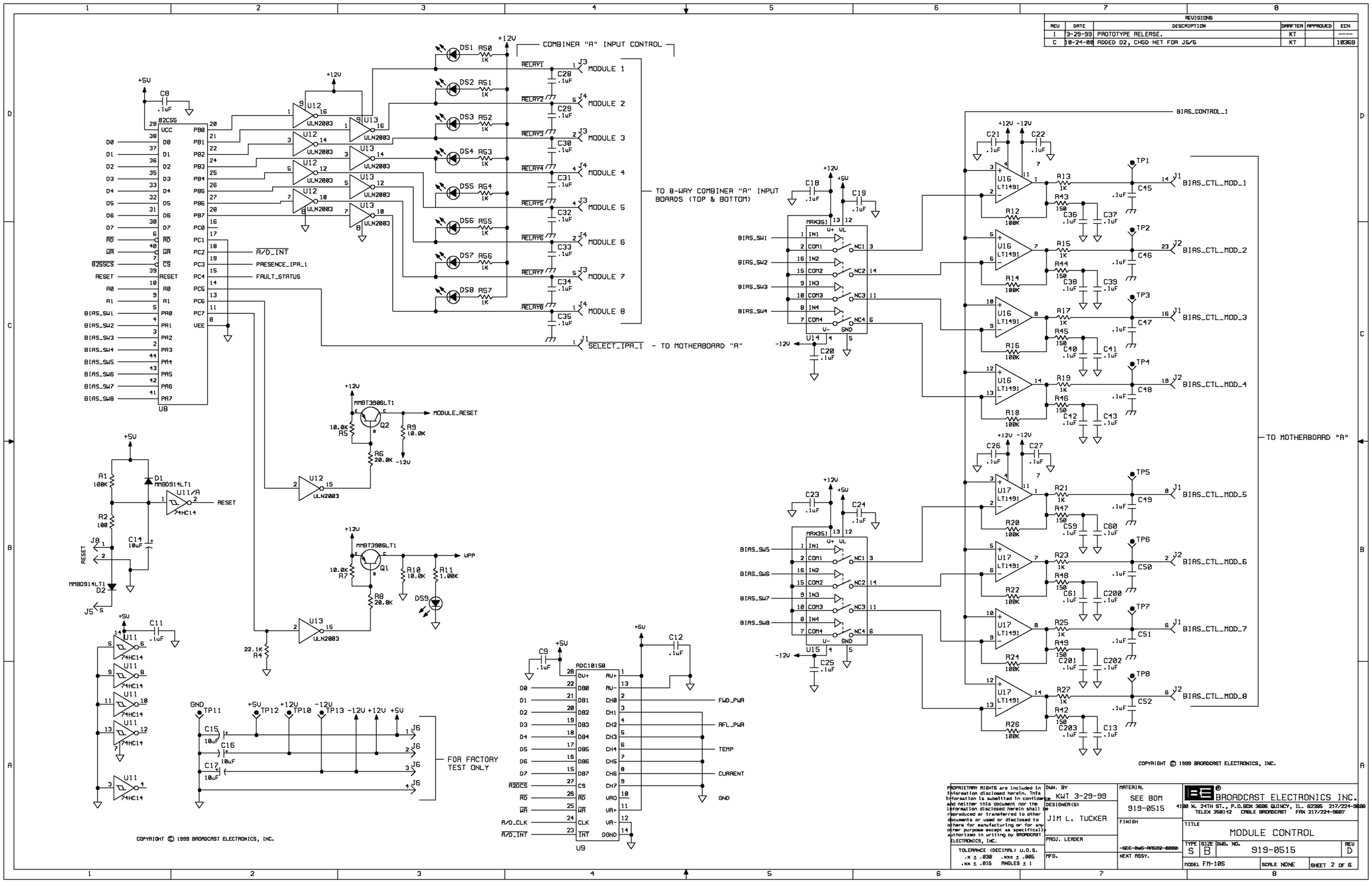

PROPRIETARY RIGHTS are included in information disclosed herein. This information is submitted in confidence and neither this document nor the information disclosed herein shall be reproduced or transferred to other documents or used or disclosed to others for manufacturing or for any other purpose except as specifically authorized in writing by BROADCAST ELECTRONICS, INC.

TOLERANCE (DECIMAL) U.O.S.
.x ± .030 .xxx ± .005
.xx ± .015 ANGLES ± 1

DWN. BY KWT 3-29-99
DESIGNER(S) JIM L. TUCKER
PROJ. LEADER
MFG.

MATERIAL SEE BOM 919-0515
FINISH
~~SEE DWG RA602-0000~~
NEXT ASSY.

BROADCAST ELECTRONICS INC.
4100 N. 24TH ST., P.O.BOX 3606 QUINCY, IL. 62305 217/224-9600
TELEX 250142 CABLE BROADCAST FAX 217/224-9607

TITLE MODULE CONTROL

TYPE S | SIZE B | DWG. NO. 919-0515 | REV D

MODEL FM-10S | SCALE NONE | SHEET 2 OF 6

REVISIONS					
REV	DATE	DESCRIPTION	DRAWTIER	APPROVED	ECN
1	3-29-99	PROTOTYPE RELEASE.	KT		----
3	5-5-00	HOOKED R36 UP TO +5V; MODEL RELEASE	KT		----

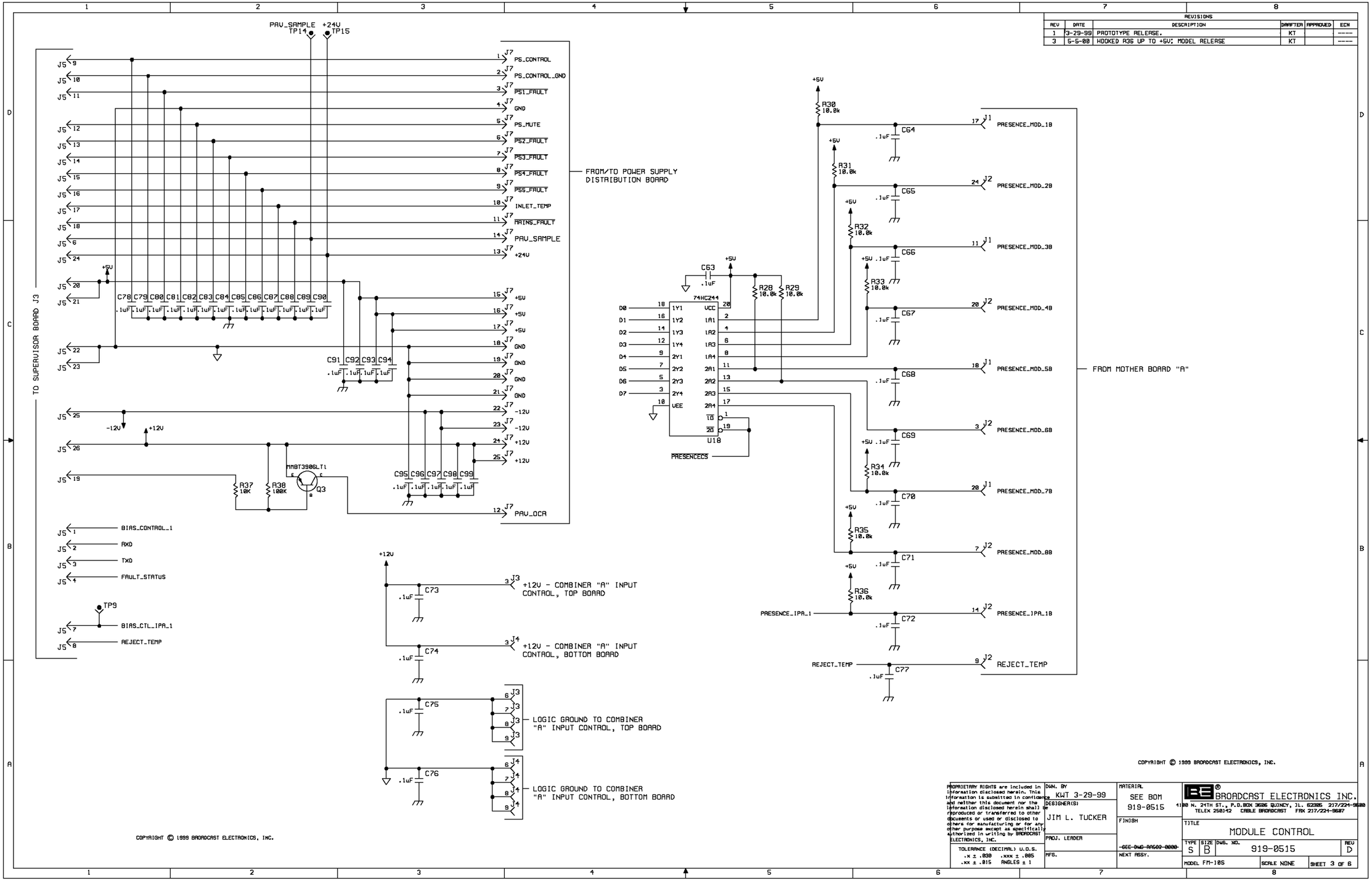

TOLERANCE (DECIMAL) U.O.S.
.x ± .030 .xxx ± .005
.xx ± .015 ANGLES ± 1

DWN. BY KWT 3-29-99
DESIGNER(S) JIM L. TUCKER
PROJ. LEADER
MFG.

MATERIAL SEE BOM 919-0515
FINISH
~~SEE DWG RA502-0000~~
NEXT ASSY.

BROADCAST ELECTRONICS INC.
4100 N. 24TH ST., P.O.BOX 3686 QUINCY, IL. 62305 217/224-9630
TELEX 250142 CABLE BROADCAST FAX 217/224-9607

TITLE MODULE CONTROL

TYPE	SIZE	DWG. NO.	REV
S	B	919-0515	D

MODEL FM-10S SCALE NONE SHEET 3 OF 6

REVISIONS					
REV	DATE	DESCRIPTION	DRAFTER	APPROVED	ECN
1	3-29-99	PROTOTYPE RELEASE.	KT		----
3	5-5-00	CHGD U107, HOOKED UP U107-3, U105-1 & U103-19	KT		----
B	9-25-00	CHGD U102 TO A 80C32	KT		10357
D	8-9-01	ADDED R158	KT		10498

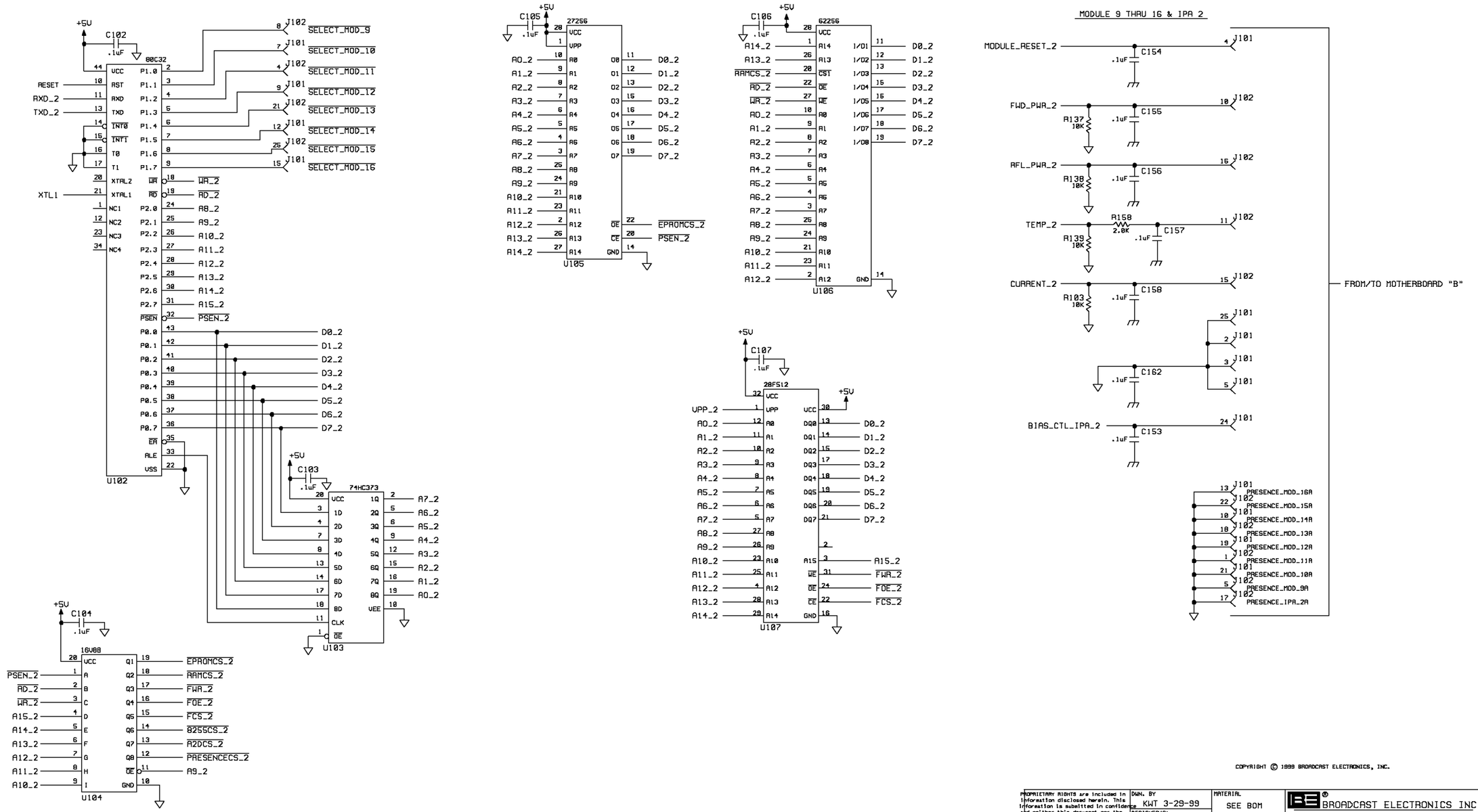

TOLERANCE (DECIMAL) U.O.S.
.x ± .030 .xxx ± .005
.xx ± .015 ANGLES ± 1

DWN. BY KWT 3-29-99
DESIGNER(S) JIM L. TUCKER
PROJ. LEADER
MFG.

MATERIAL SEE BOM 919-0515
FINISH
~~SEE DWG RA692-0000~~
NEXT ASSY.

BROADCAST ELECTRONICS INC.
4100 N. 24TH ST., P.O.BOX 3606 QUINCY, IL. 62305 217/224-9630
TELEX 250142 CABLE BROADCAST FAX 217/224-9697

TITLE MODULE CONTROL

TYPE	SIZE	DWG. NO.	REV
S	B	919-0515	D

MODEL FM-10S SCALE NONE SHEET 4 OF 6

REVISIONS					
REV	DATE	DESCRIPTION	DRAFTER	APPROVED	ECN
1	3-29-99	PROTOTYPE RELEASE.	KT		----
A	8-9-00	CONNECTED R109 TO -12V; ENGINEERING RELEASE	KT		10339

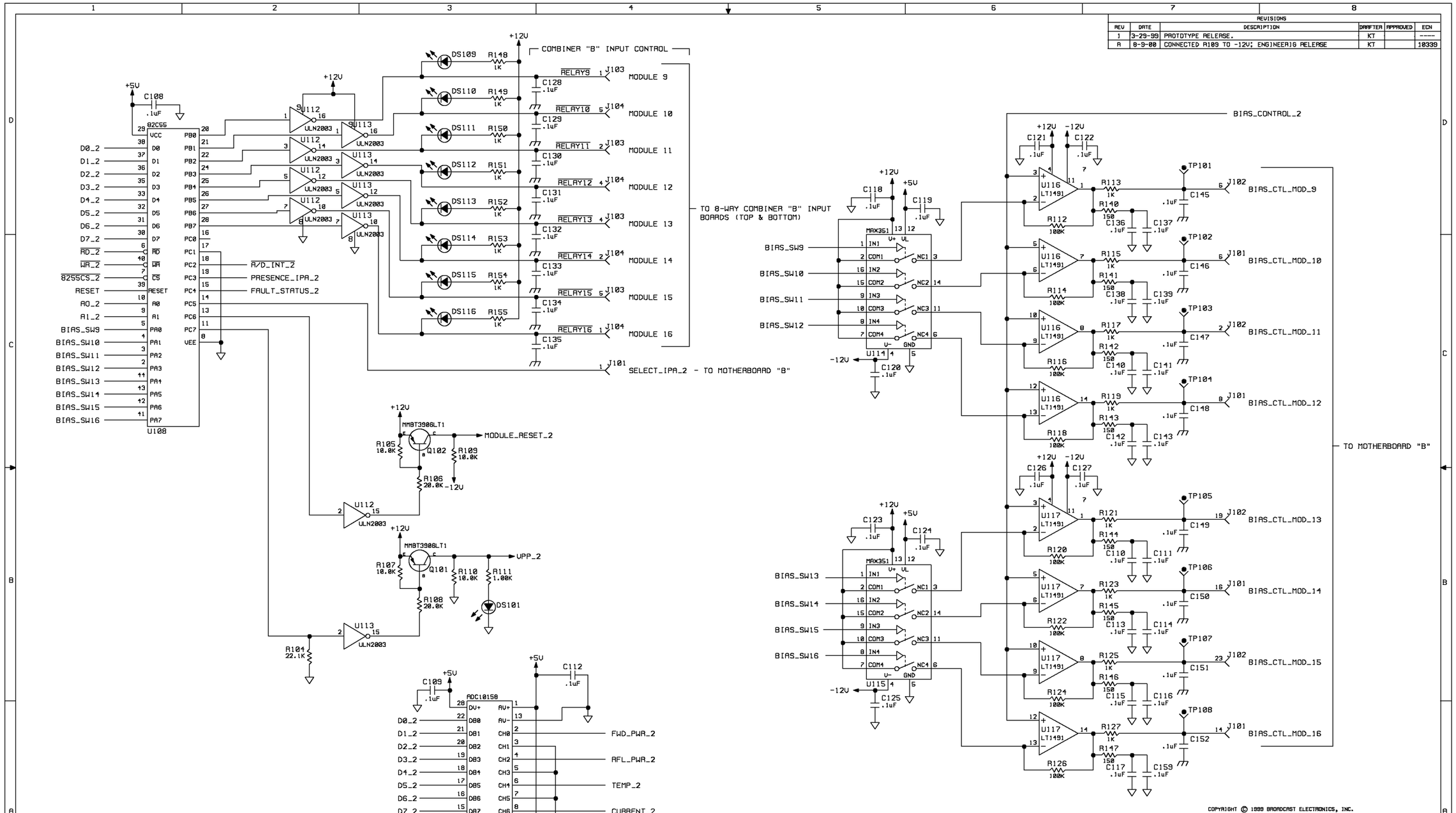

TOLERANCE (DECIMAL) U.O.S.
.x ± .030 .xxx ± .005
.xx ± .015 ANGLES ± 1

DWN. BY KWT 3-29-99
DESIGNER(S) JIM L. TUCKER
PROJ. LEADER
MFG.

MATERIAL SEE BOM 919-0515
FINISH
~~SEE DWG AA502-0000~~
NEXT ASSY.

BROADCAST ELECTRONICS INC.
4100 N. 24TH ST., P.O.BOX 3686 QUINCY, IL. 62305 217/224-9600
TELEX 250142 CABLE BROADCAST FAX 217/224-9687

TITLE MODULE CONTROL

TYPE S | SIZE B | DWG. NO. 919-0515 | REV D

MODEL FM-10S | SCALE NONE | SHEET 5 OF 6

REVISIONS					
REV	DATE	DESCRIPTION	DRAFTER	APPROVED	ECN
1	3-29-99	PROTOTYPE RELEASE.	KT		----

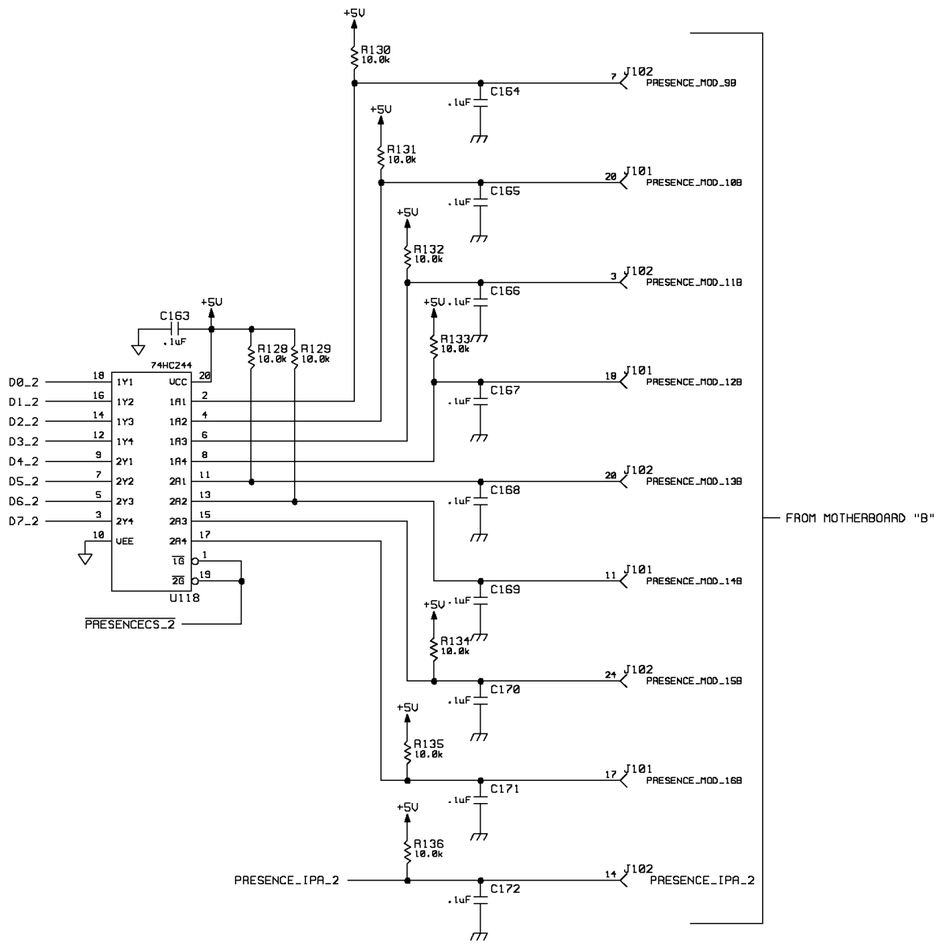

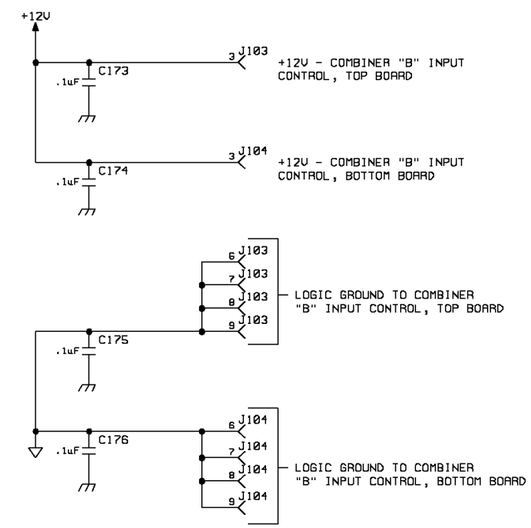

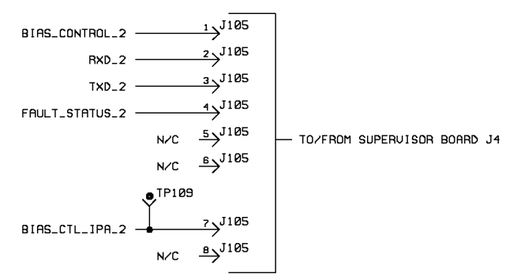

COPYRIGHT © 1999 BROADCAST ELECTRONICS, INC.

TOLERANCE (DECIMAL) U.O.S.
.x ± .030 .xxx ± .005
.xx ± .015 ANGLES ± 1

DWN. BY KWT 3-29-99
DESIGNER(S) JIM L. TUCKER
PROJ. LEADER
MFG.

MATERIAL SEE BOM 919-0515
FINISH ~~SEE DWG RA592-0000~~
NEXT ASSY.

BROADCAST ELECTRONICS INC.
4100 N. 24TH ST., P.O.BOX 3606 QUINCY, IL. 62305 217/224-9600
TELEX 250142 CABLE BROADCAST FAX 217/224-9607

TITLE MODULE CONTROL

TYPE S | SIZE B | DWG. NO. 919-0515 | REV D

MODEL FM-10S | SCALE NONE | SHEET 6 OF 6

REVISIONS					
REV	DATE	DESCRIPTION	DRAFTER	APPROVED	ECN
1	3-26-99	PROTOTYPE RELEASE.	KT		----
2	9-23-99	MAJOR CHANGES ACROSS BOARD.	KT		----
3	5-9-00	MADE ALL IC'S SURFACE MOUNT ABLE; MODEL RELEASE.	KT	JLT	----
A	8-9-00	FIXED DISJOINTED NETS; ENGINEERING RELEASE.	KT	JLT	10339
B	9-28-00	CHGD U2 & U102 TO 229-8032-001	KT	DDL	10357
C	10-24-00	ADDED D2; MOVED D1.	KT	DDL	10369
D	8-9-01	ADDED R58 & R158	KT	DDL	10498
E	12-5-01	UPDATED SOFTWARE 979-0515-007 TO VER 1.05	KT		10575

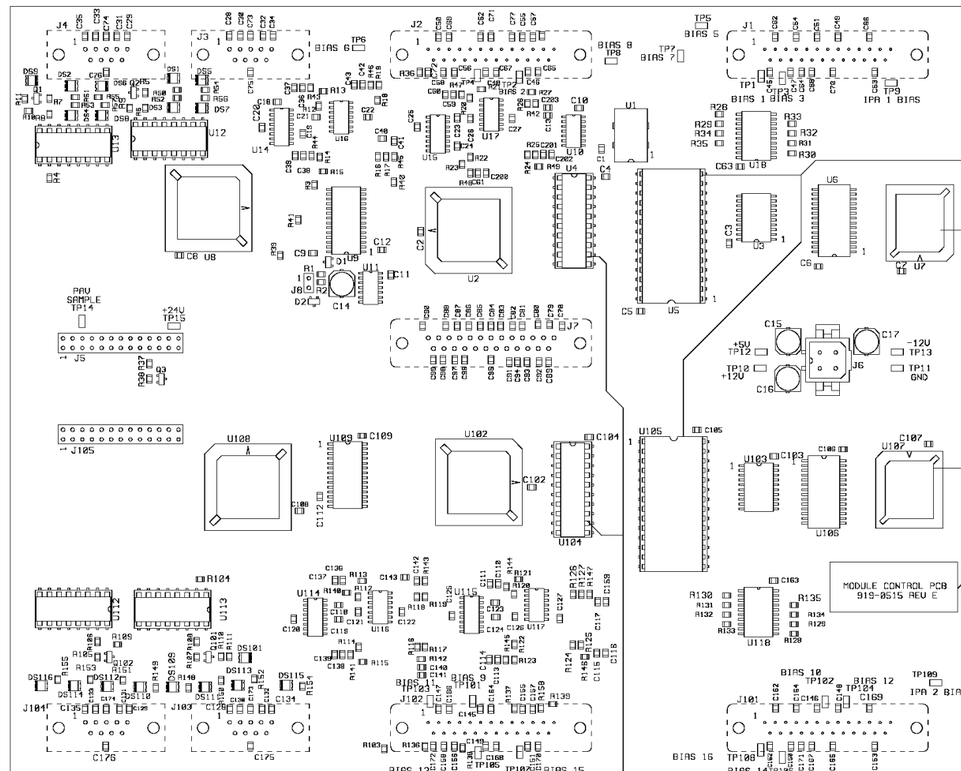

INSTALL SOFTWAE 979-0515-005 ON U5 & U105, BEFORE BOARD ASSEMBLY. ADD LABEL TO TOP OF U5 & U105 INDICATING : REV 1.0

INSTALL SOFTWAE 979-0515-007 ON U7 & U107, DURING BOARD TESTING. ADD LABEL TO TOP OF U7 & U107 INDICATING : REV 1.05

SEE NOTE 3

INSTALL SOFTWAE 979-0515-004 ON U4 & U104, BEFORE BOARD ASSEMBLY. ADD LABEL TO TOP OF U4 & U104 INDICATING : REV 1.0

NOTES:

1) SEE SCHEMATIC SB919-0515.
2) J1-J4,J7 & J101-J104 TO BE STUFFED ON THE SOLDER SIDE OF THE PCB.
3) IN THE BLACK WHITE BOX WRITE THE REV. LETTER OF THAT APPEARS ON THE CURRENT ASSEMBLY DRAWING.

TOLERANCE (DECIMAL) U.O.S.
.X ± .030 .XXX ± .005
.XX ± .015 ANGLES ± 1°

DWN. BY: KWT 3-26-99
DESIGNER(S): JIM TUCKER
PROJ. LEADER:
MFG.

MATERIAL: SEE BOM 919-0515
FINISH:
NEXT ASSY.

BROADCAST ELECTRONICS INC.
4100 N. 24TH ST. P.O.BOX 3606 QUINCY,IL. 62305
217/224-9600 FAX 217/224-9607

TITLE: MODULE CONTROL

TYPE	SIZE	DWG No.	REV
A	C	919-0515	E

MODEL FM10S | SCALE 1/1 | SHEET 1 OF 1

4	8-30-00	R4 WAS 9090 OHM; TEMP SAMPLE WAS X10	KT		----
A	9-27-00	ENGINEERING RELEASE	KT	RPM	----
B	7-10-03	CHGD R3; ADDED D1	KT		11005

REVISIONS

REV	DATE	DESCRIPTION	DRAFTER	APPROVED	ECN
1	2-12-99	PROTOTYPE RELEASE	KT		----
2	3-30-99	C3 & C5 WERE 390pF, U1 WAS A TL092.	KT		----
3	2-17-00	U1 WAS A TLC2252.	KT		----

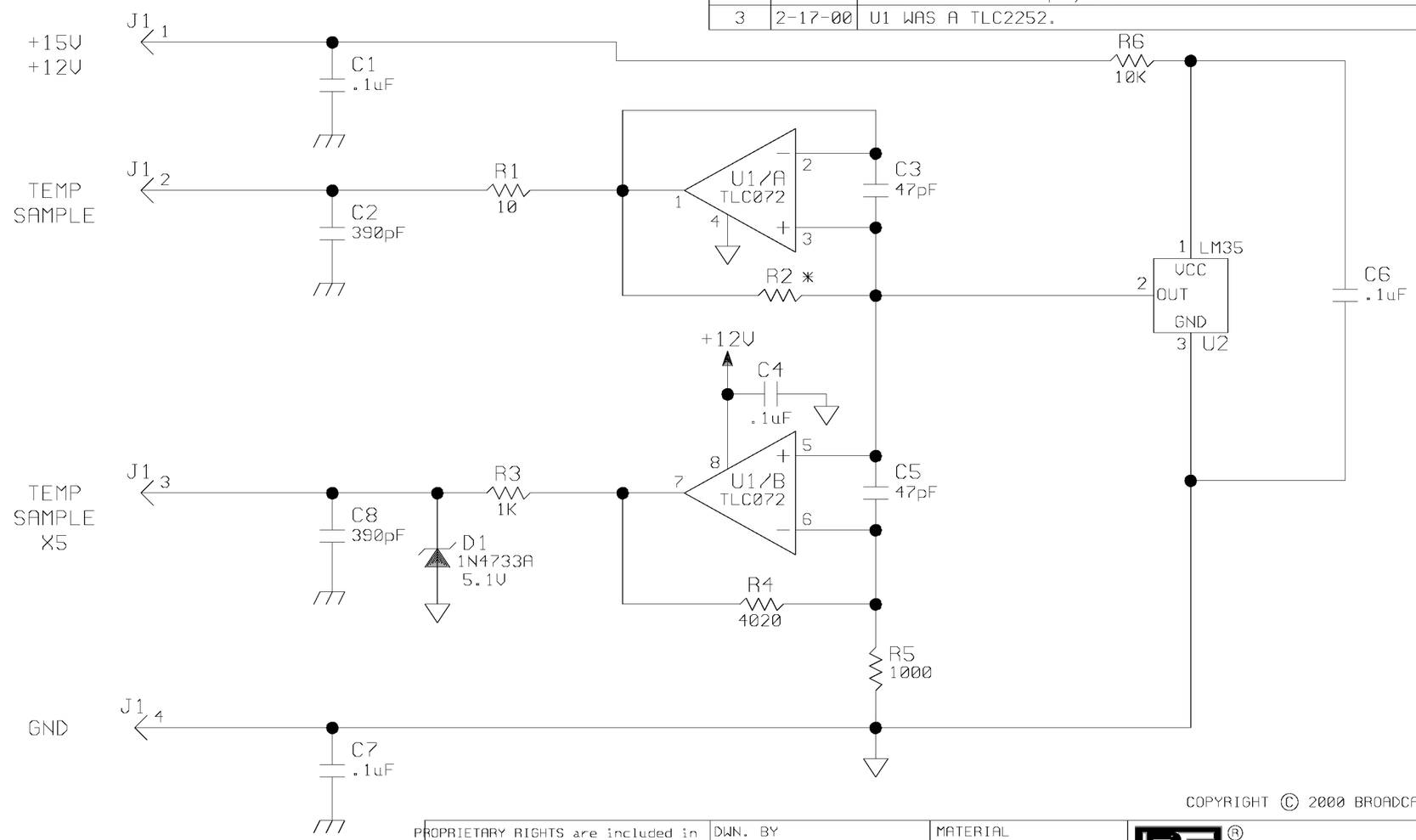

NOTES:

1. ALL RESISTORS IN OHMS; 1/4W, 5%, UNLESS OTHERWISE SPECIFIED.
2. LAST COMPONENT USED: C8, D1, J1, R6, U2
3. SEE PCB ASSEMBLY AB919-0516.
4. * INDICATES PART NOT USED (R2)

TOLERANCE (DECIMAL) U.O.S.
.x ± .030 .xxx ± .005
.xx ± .015 ANGLES ± 1°

DWN. BY KT 2-12-99
DESIGNER(S) RPM 9-29-00
PROJ. LEADER MBS 9-29-00
MFG.

MATERIAL SEE BOM 919-0516
FINISH
NEXT ASSY.

BROADCAST ELECTRONICS INC.
4100 N. 24TH ST., P.O.BOX 3606 QUINCY, IL. 62305
217/224-9600 FAX 217/224-9607

TITLE SCHEMATIC, TEMPERATURE SENSOR, PCB

TYPE	SIZE	DWG. NO.	REV
S	B	919-0516-001/-002	B

MODEL FM-10S SCALE NONE SHEET 1 OF 1

A	9-27-00	ENGINEERING RELEASE.	KT	RPM	----
B	7-10-03	CHGD R3 TO 100-1041; ADDED D1	KT		11005

REVISIONS

REV	DATE	DESCRIPTION	DRAFTER	APPROVED	ECN
1	3-11-99	PROTOTYPE RELEASE.	KT		----
2	4-1-99	C3 & C5 CHGD TO 47pF, U1 TO A TLC2252.	KT		----
3	5-3-00	ADDED NOTE 4; MODEL RELEASE	KT	RPM	----
4	8-30-00	R4 CHANGED FROM 9090 OHMS TO 4020 OHMS	KT	RPM	----

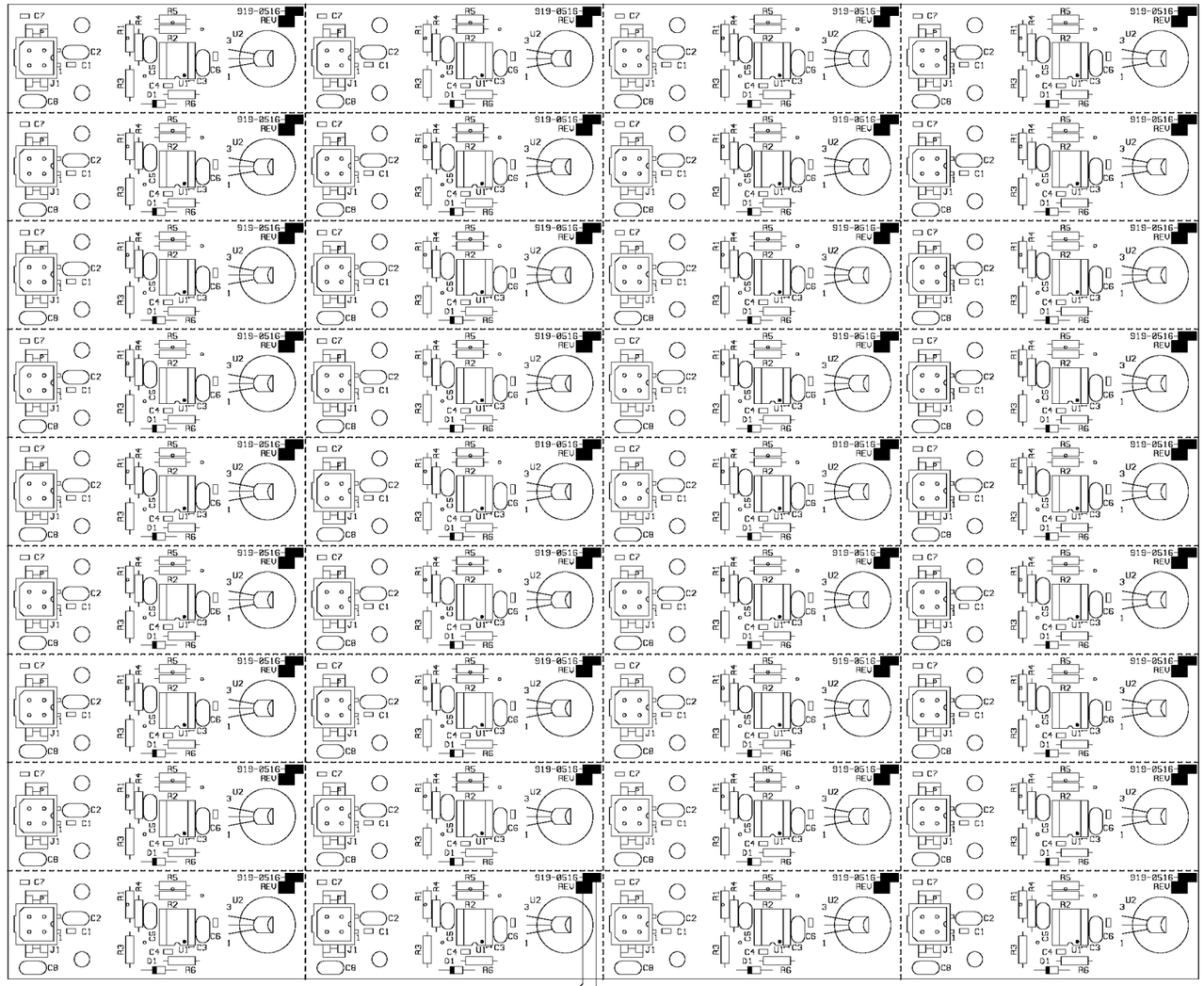

MARK REV ON ASSEMBLY DRAWING IN THIS BOX, ON EACH PCB

MARK VERSION OF BOARD BUILT -001 OR -002 IN THIS BOX

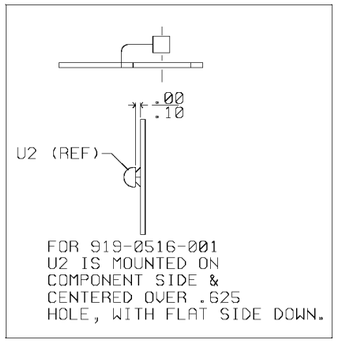

DETAIL"A"

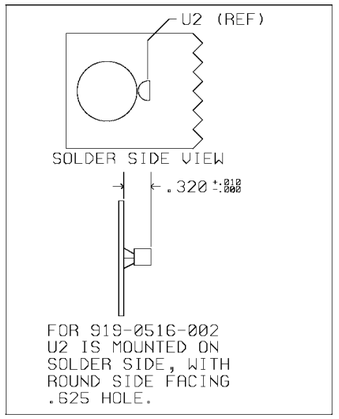

DETAIL"B"

NOTES:
1. U2 IS TO BE HAND SOLDERED PER DEVIATION, SEE DETAIL "A" FOR -001, "B" FOR -002.
2. SEE PCB SCHEMATIC: SB919-0516-001/-002.
3. LAST COMPONENTS USED: C8, J1, R6, U2.
4. R2 NOT USED FOR -001,-002 VERSIONS.

TOLERANCE (DECIMAL) U.O.S.
.X ± .030 .XXX ± .005
.XX ± .015 ANGLES ± 1°

DWN. BY: KWT 3-11-99
DESIGNER(S): RPM 9-29-00
PROJ. LEADER: MBS 9-29-00
MFG.

MATERIAL: SEE BOMS 919-0516-001 919-0516-002
FINISH
NEXT ASSY.

BROADCAST ELECTRONICS INC.
4100 N. 24TH ST. P.O.BOX 3606 QUINCY,IL. 62305
217/224-9600 FAX 217/224-9607

TITLE: TEMP. SENSOR BREAKAWAY

TYPE	SIZE	DWG.NO.	REV
A	C	919-0516/-001/-002	B

MODEL FM10 | SCALE 1/1 | SHEET 1 OF 1

REVISIONS					
REV	DATE	DESCRIPTION	DRAFTER	APPROVED	ECN
J	2-19-01	PROTOTYPE RELEASE	KT		----
A	6-15-01	MODEL RELEASE	KT		----

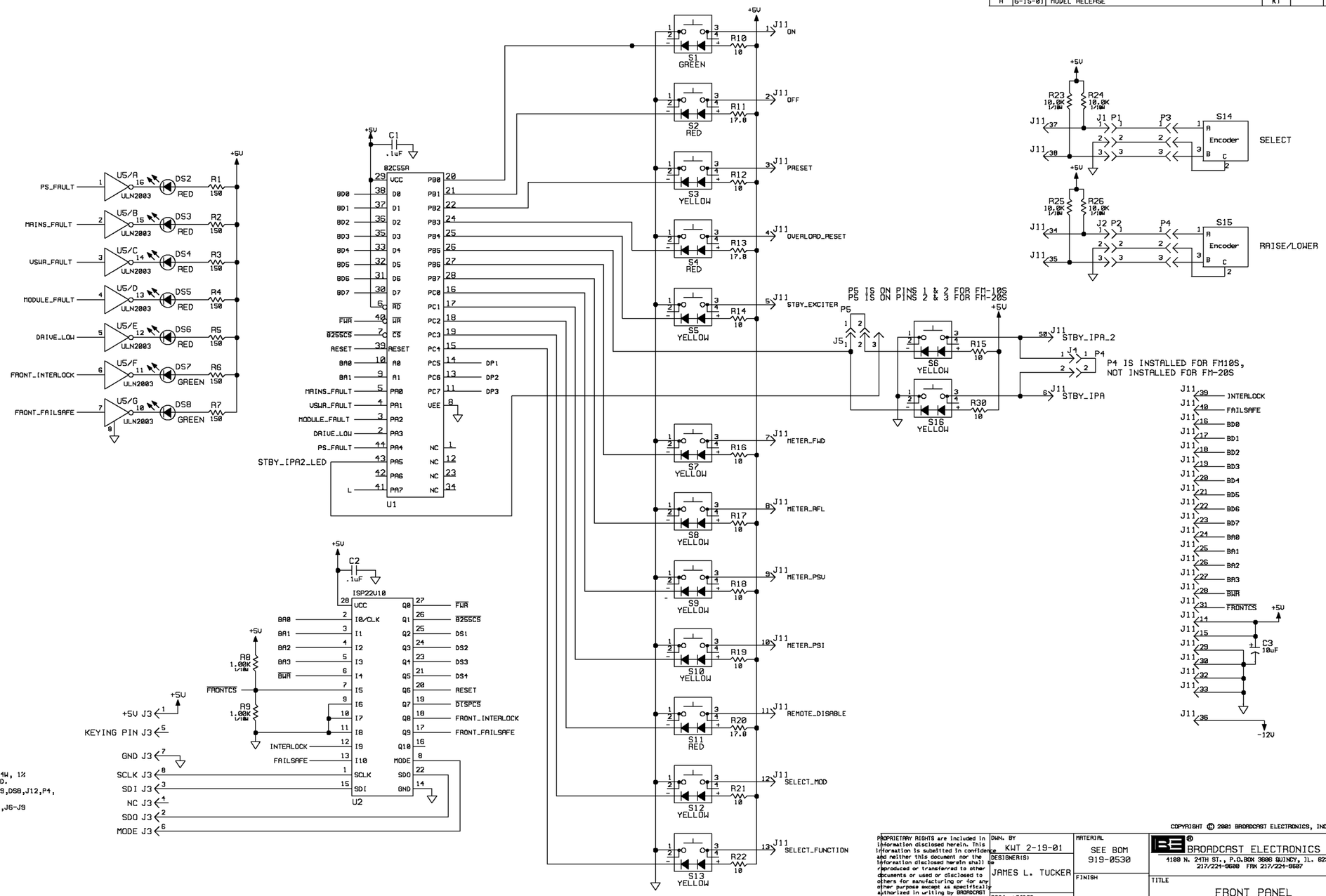

NOTES:

1. ALL RESISTORS IN OHMS; 1/4W, 1% UNLESS OTHERWISE SPECIFIED.
2. LAST COMPONENT USED:C15,D9,DS8,J12,P4, R29,S16,U5.
3. COMPONENTS NOT USED:C8,C9,J6-J9
4. SEE ASSEMBLY:AC919-0530

TOLERANCE (DECIMAL) U.O.S.
.x ± .030 .xxx ± .005
.xx ± .015 ANGLES ± 1°

DWN. BY KWT 2-19-01
DESIGNER(S) JAMES L. TUCKER
PROJ. LEADER
MFG.

MATERIAL SEE BOM 919-0530
FINISH
NEXT ASSY. AC919-0530

BROADCAST ELECTRONICS INC.
4100 N. 24TH ST., P.O.BOX 3686 QUINCY, IL. 62305
217/224-9600 FAX 217/224-9687

TITLE FRONT PANEL

TYPE	SIZE	DWG. NO.	REV
S	B	919-0530	A

MODEL FM-20S SCALE NONE SHEET 1 OF 2

REVISIONS					
REV	DATE	DESCRIPTION	DRAFTER	APPROVED	ECN
1	2-19-01	PROTOTYPE RELEASE	KT		----

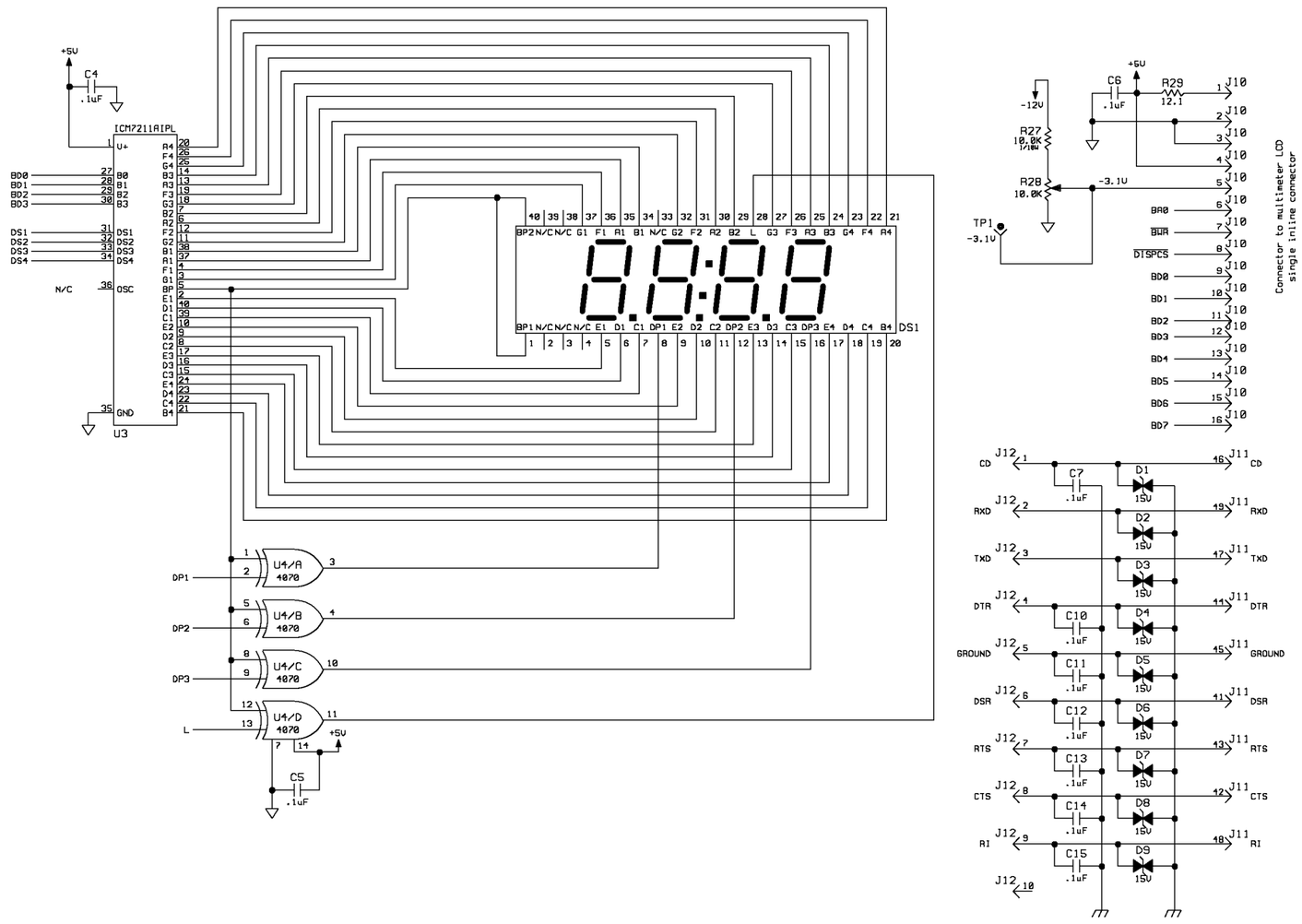

PROPRIETARY RIGHTS are included in information disclosed herein. This information is submitted in confidence and neither this document nor the information disclosed herein shall be reproduced or transferred to other documents or used or disclosed to others for manufacturing or for any other purpose except as specifically authorized in writing by BROADCAST ELECTRONICS, INC.

TOLERANCE (DECIMAL) U.O.S.
.x ± .030 .xxx ± .005
.xx ± .015 ANGLES ± 1

DWN. BY KWT 2-19-01
DESIGNER(S) JAMES L. TUCKER
PROJ. LEADER
MFG.

MATERIAL SEE BOM 919-0530
FINISH
NEXT ASSY. AC919-0530

BROADCAST ELECTRONICS INC.
4100 N. 24TH ST., P.O.BOX 3626 QUINCY, IL. 62305
217/224-9600 FAX 217/224-9687

TITLE FRONT PANEL

TYPE	SIZE	DWG. NO.	REV
S	B	919-0530	A

MODEL FM-20S SCALE NONE SHEET 2 OF 2

REVISIONS					
REV	DATE	DESCRIPTION	DRAFTER	APPROVED	ECN
1	2-19-01	PROTOTYPE RELEASE.	KWT		----
A	6-15-01	MODEL RELEASE	KWT		----

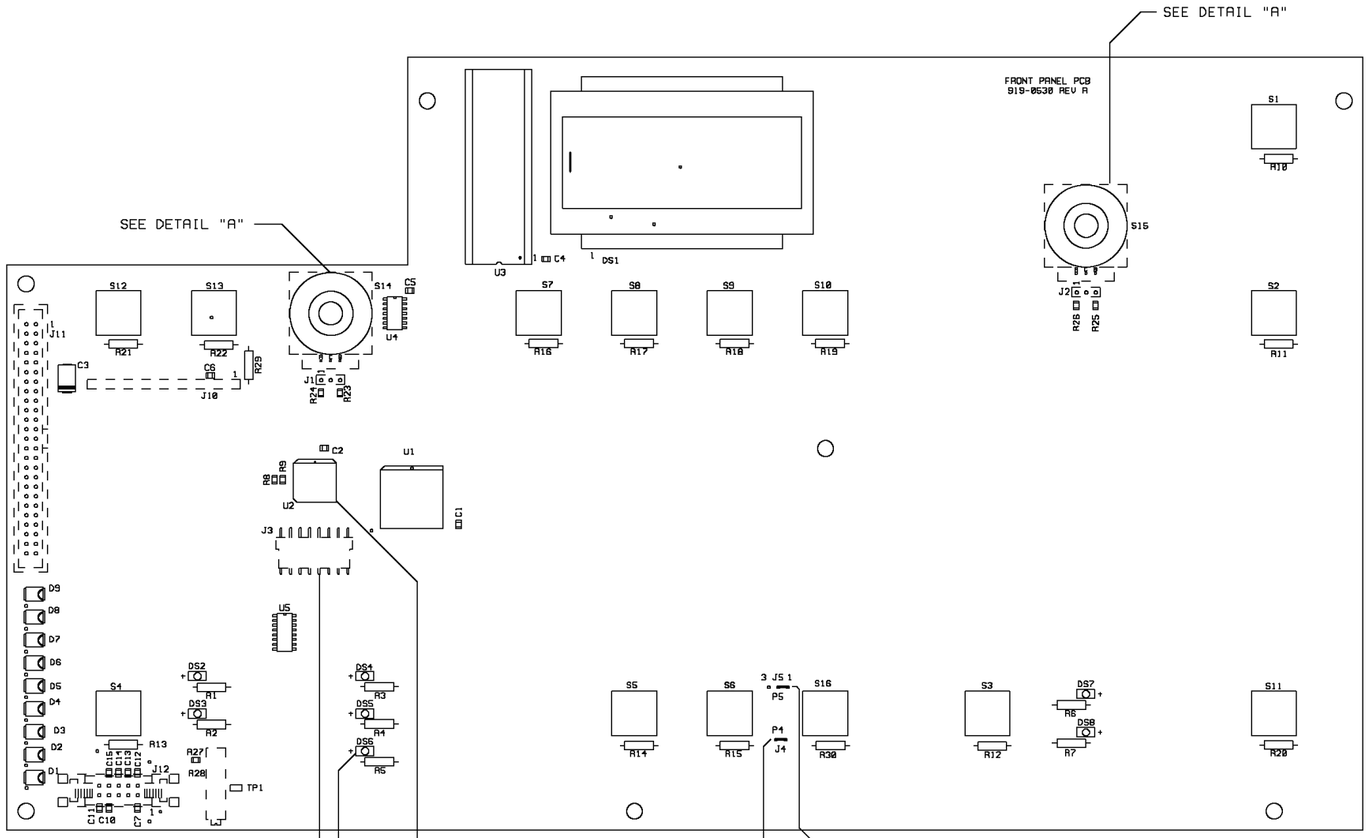

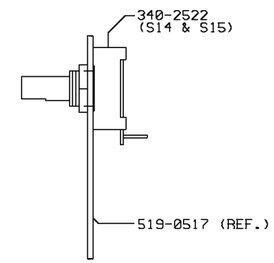

DETAIL "A"

NOTES:

1) J1,J2,J3,J4,J5,J10,J11,J12,R28,S14 & S15 ARE MOUNTED ON THE SOLDER SIDE OF PCB.
2) TRIM DS2-DS8 ABOVE SHOULDERS AND MOUNT THEM FLUSH TO THE PCB.

TOLERANCE (DECIMAL) U.O.S.
.X ± .030 .XXX ± .005
.XX ± .015 ANGLES ± 1°

DWN. BY: KT 2-19-01
DESIGNER(S):
PROJ. LEADER:
MFG.

MATERIAL: SEE BOM 919-0530
FINISH:
NEXT ASSY.

BROADCAST ELECTRONICS INC.
4100 N. 24TH ST. P.O.BOX 3606 QUINCY,IL. 62305
217/224-9600 FAX 217/224-9607

TITLE: FRONT PANEL

TYPE	SIZE	DWG No.	REV
A	C	919-0530	A

MODEL FM-10S/20S | SCALE 1/1 | SHEET 1 OF 1

REVISIONS					
REV	DATE	DESCRIPTION	DRAFTER	APPROVED	ECN
1	12-4-00	PROTOTYPE RELEASE.	KT	JT	----------
2	6-8-01	ADDED C132; CHGD R225 NET; SEE PAGES 2-4 ALSO	KT		----------
A	6-15-01	MODEL RELEASE	KT	JT	----------
B	8-20-01	ADDED VSWR_INTERRUPT NET; SEE SHEET 4 ALSO	KT	JT	12502
C	2-14-02	ADDED C137,R232-R236 & U50; SEE SHEETS 2 & 3 ALSO	KT		12641

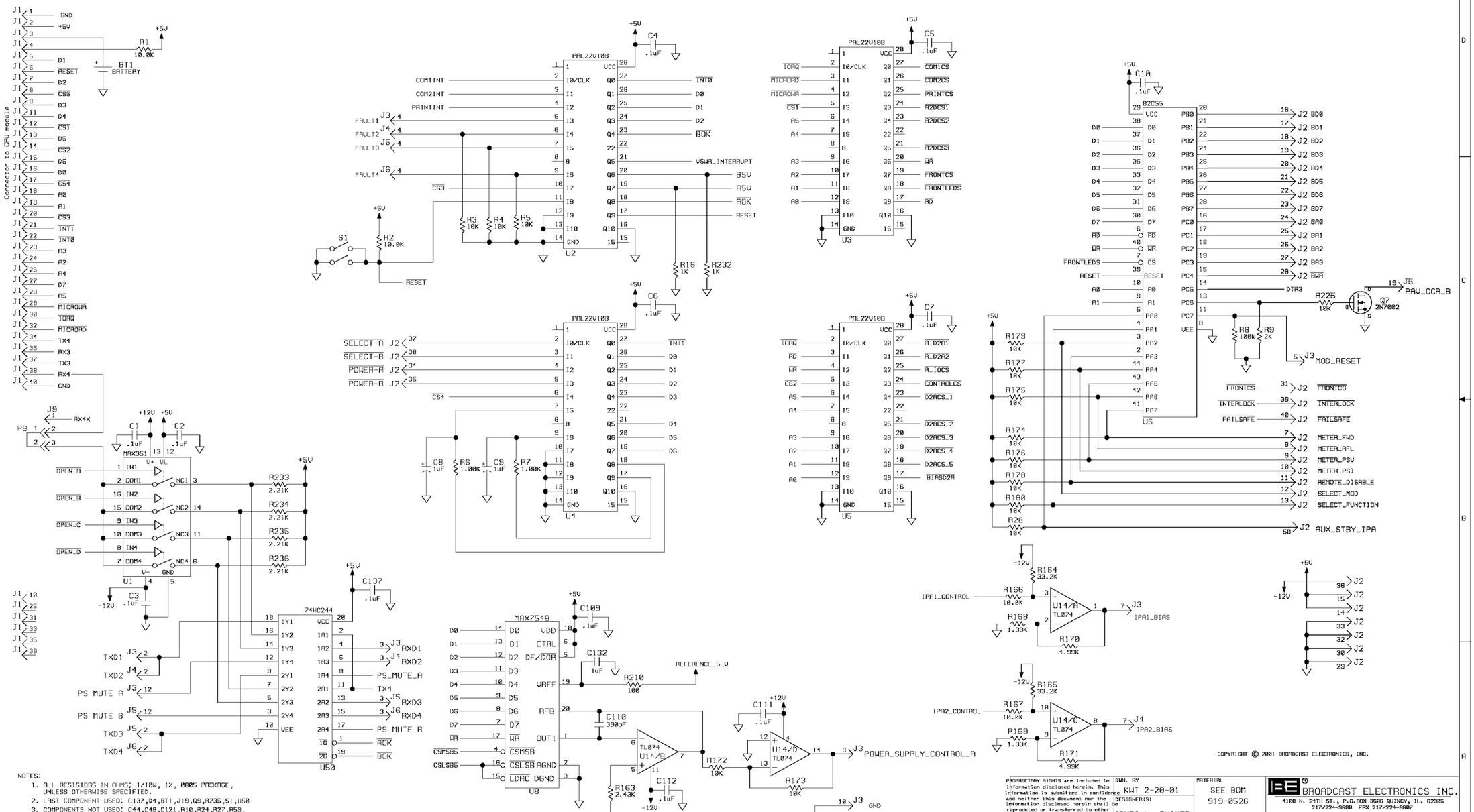

NOTES:

1. ALL RESISTORS IN OHMS; 1/10W, 1%, 0805 PACKAGE, UNLESS OTHERWISE SPECIFIED.
2. LAST COMPONENT USED: C137,D4,BT1,J19,Q9,R236,S1,U50
3. COMPONENTS NOT USED: C44,C48,C121,R10,R24,R27,R59, R155,R159,R162,R206
4. SEE ASSEMBLY: AC919-0526

TOLERANCE (DECIMAL) U.O.S.
.X ± .030 .XXX ± .005
.XX ± .015 ANGLES ± 1°

DWN. BY KWT 2-20-01
DESIGNER(S) JAMES L. TUCKER 6-15-01
PROJ. LEADER 6-15-01 MUKUNDA SHRESTHA
MFG.

MATERIAL SEE BOM 919-0526
FINISH
NEXT ASSY.

BROADCAST ELECTRONICS INC.
4100 N. 24TH ST., P.O.BOX 3686 QUINCY, IL. 62305
217/224-9600 FAX 217/224-9607

TITLE SUPERVISOR BOARD

TYPE S SIZE B DWG. NO. 919-0526 REV C
MODEL FM-20S SCALE NONE SHEET 1 OF 5

REVISIONS					
REV	DATE	DESCRIPTION	DRAFTER	APPROVED	ECN
1	12-4-00	PROTOTYPE RELEASE.	KT		--------
2	6-8-01	CHGD R192-R201; CHGD R227 NET	KT		-----
C	2-14-02	MOVED R16,J3-12 & J5-12;DEL J11; ADDED AOK & BOK	KT		10641

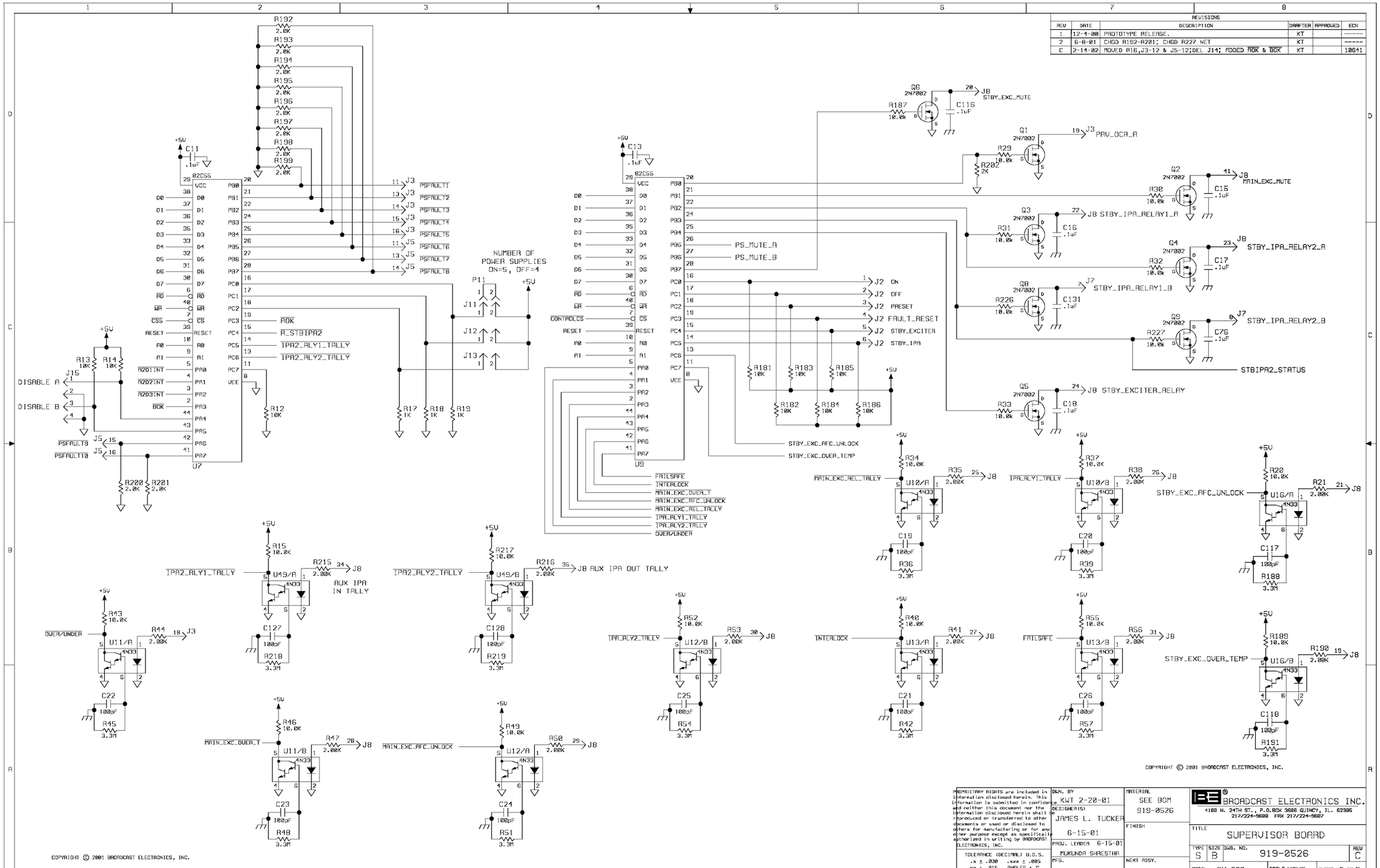

PROPRIETARY RIGHTS are included in information disclosed herein. This information is submitted in confidence and neither this document nor the information disclosed herein shall be reproduced or transferred to other documents or used or disclosed to others for manufacturing or for any other purpose except as specifically authorized in writing by BROADCAST ELECTRONICS, INC.

TOLERANCE (DECIMAL) U.O.S. .x ± .030 .xxx ± .005 .xx ± .015 ANGLES ± 1°

DWN. BY KWT 2-20-01
DESIGNER(S) JAMES L. TUCKER 6-15-01
PROJ. LEADER 6-15-01 MUKUNDA SHRESTHA
MFG.

MATERIAL SEE BOM 919-0526
FINISH
NEXT ASSY.

BROADCAST ELECTRONICS INC.
4100 N. 24TH ST., P.O.BOX 3686 QUINCY, IL. 62305
217/224-9600 FAX 217/224-9607

TITLE SUPERVISOR BOARD

TYPE	SIZE	DWG. NO.	REV
S	B	919-0526	C

MODEL FM-20S SCALE NONE SHEET 2 OF 5

REVISIONS					
REV	DATE	DESCRIPTION	DRAFTER	APPROVED	ECN
1	12-4-00	PROTOTYPE RELERSE.	KT		-----
2	6-8-01	ADDED C133 & C134	KT		-----
C	2-14-02	CHGD NET FOR U28 PIN 13 & J17 PINS 1 & 3	KT		12641

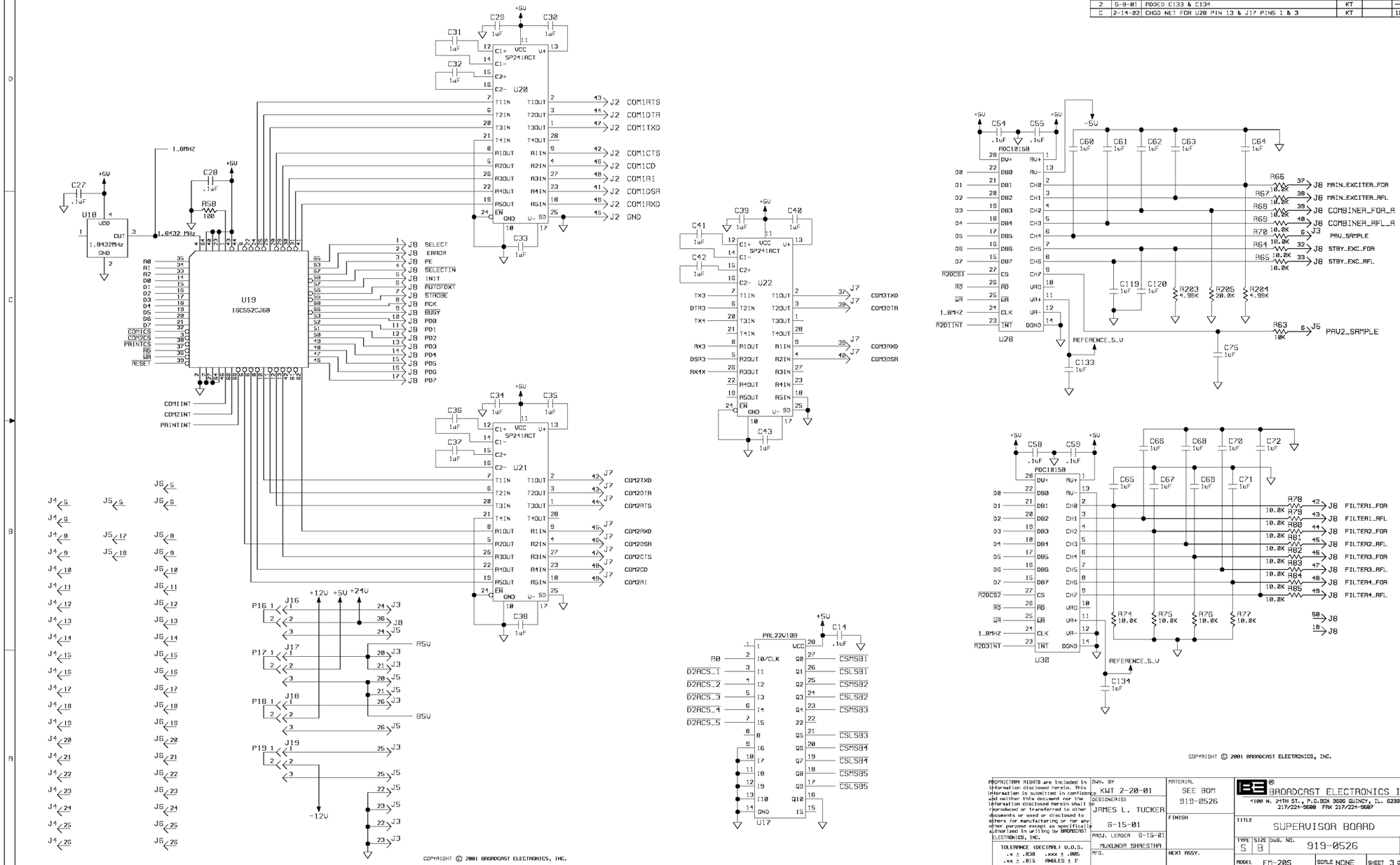

PROPRIETARY RIGHTS are included in information disclosed herein. This information is submitted in confidence and neither this document nor the information disclosed herein shall be reproduced or transferred to other documents or used or disclosed to others for manufacturing or for any other purpose except as specifically authorized in writing by BROADCAST ELECTRONICS, INC.

TOLERANCE (DECIMAL) U.O.S.
.x ± .030 .xxx ± .005
.xx ± .015 ANGLES ± 1°

DWN. BY KWT 2-20-01
DESIGNER(S) JAMES L. TUCKER 6-15-01
PROJ. LEADER 6-15-01 MUKUNDA SHRESTHA
MFG.

MATERIAL SEE BOM 919-0526
FINISH
NEXT ASSY.

BROADCAST ELECTRONICS INC.
4100 N. 24TH ST., P.O.BOX 3606 QUINCY, IL. 62305
217/224-9600 FAX 217/224-9607

TITLE SUPERVISOR BOARD

TYPE S | SIZE B | DWG. NO. 919-0526 | REV C

MODEL FM-20S | SCALE NONE | SHEET 3 OF 5

REVISIONS					
REV	DATE	DESCRIPTION	DRAFTER	APPROVED	ECN
1	12-4-00	PROTOTYPE RELEASE.	KT		-----
2	5-8-01	DEL U23,C14,C48,R205,R59,R155,R159,R24,R18,R162, R27; ADDED C135 & C136; CHGD C123,C124,R23; CHGD NET FOR J4-1,J6-1,J5-9,U27-1,2,3 & U15-5,6,7	KT		-----
B	8-20-01	ADDED D3,D4,R228-R231 & VSWR_INTERRUPT; DEL C121	KT		12580

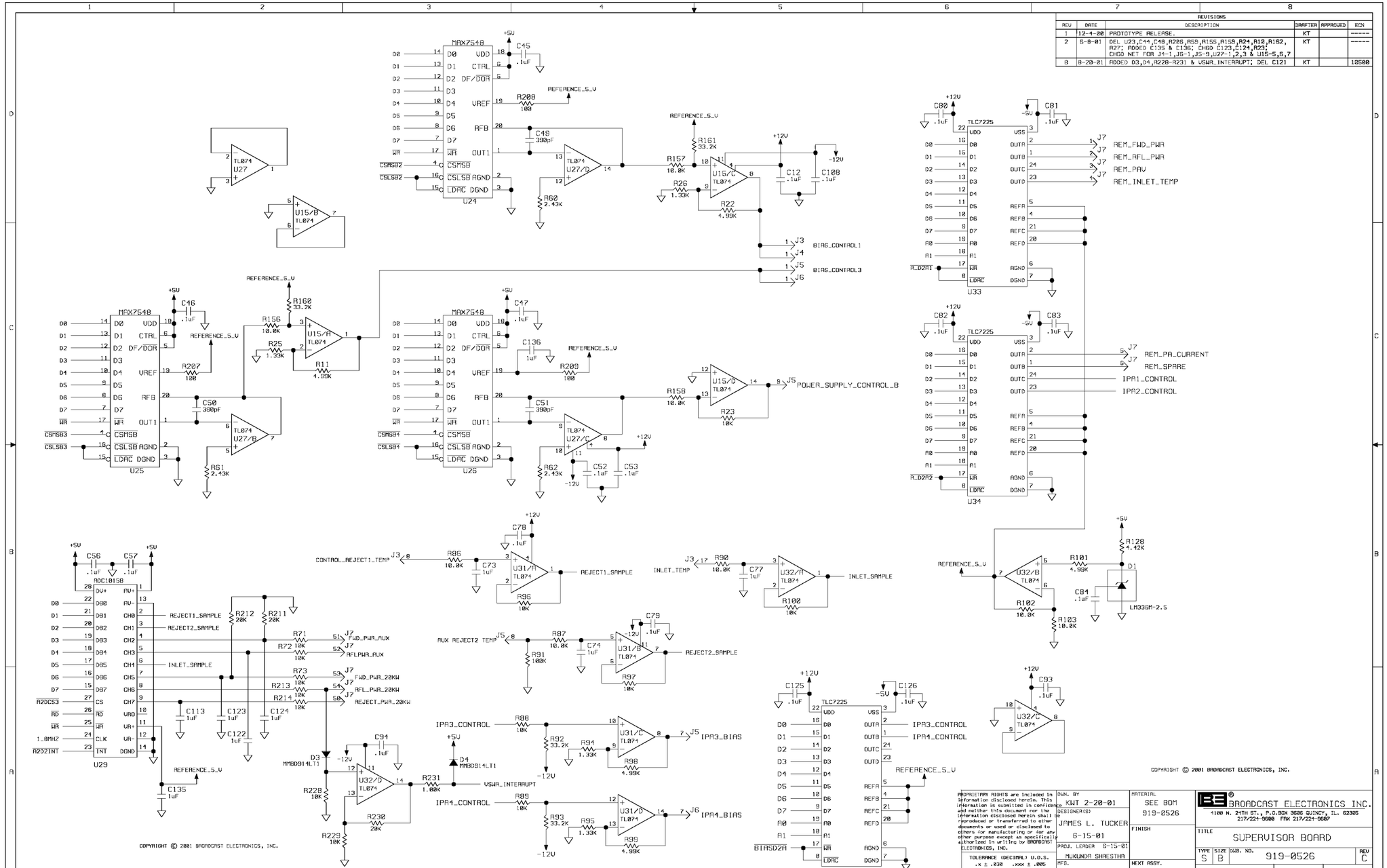

TOLERANCE (DECIMAL) U.O.S.
.X ± .030 .XXX ± .005
.XX ± .015 ANGLES ± 1°

DWN. BY KWT 2-20-01
DESIGNER(S) JAMES L. TUCKER 6-15-01
PROJ. LEADER 6-15-01 MUKUNDA SHRESTHA
MFG.

MATERIAL SEE BOM 919-0526
FINISH
NEXT ASSY.

BROADCAST ELECTRONICS INC.
4100 N. 24TH ST., P.O.BOX 3606 QUINCY, IL. 62305
217/224-9600 FAX 217/224-9607

TITLE SUPERVISOR BOARD

TYPE S | SIZE B | DWG. NO. 919-0526 | REV C

MODEL FM-20S | SCALE NONE | SHEET 4 OF 5

REVISIONS					
REV	DATE	DESCRIPTION	DRAFTER	APPROVED	ECN
1	12-4-00	PROTOTYPE RELEASE.	KT		----

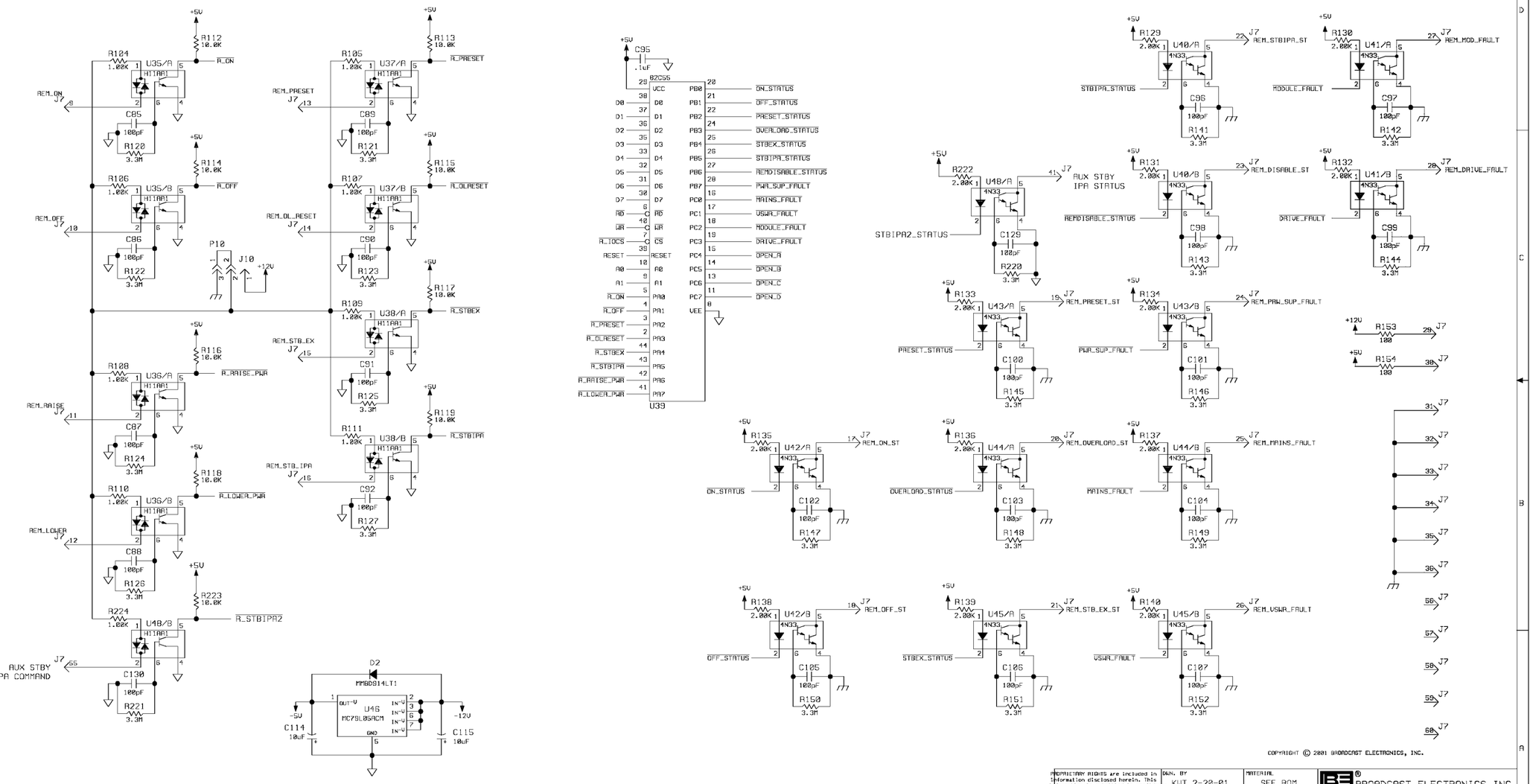

TOLERANCE (DECIMAL) U.O.S.
.x ± .030 .xxx ± .025
.xx ± .015 ANGLES ± 1°

DWN. BY KWT 2-20-01
DESIGNER(S) JAMES L. TUCKER 6-15-01
PROJ. LEADER 6-15-01
MUKUNDA SHRESTHA
MFG.

MATERIAL SEE BOM 919-0526
FINISH
NEXT ASSY.

BROADCAST ELECTRONICS INC.
4100 N. 24TH ST., P.O.BOX 3696 QUINCY, IL. 62305
217/224-9600 FAX 217/224-9607

TITLE SUPERVISOR BOARD

TYPE	SIZE	DWG. NO.	REV
S	B	919-0526	C

MODEL FM-20S SCALE NONE SHEET 5 OF 5

E	11-7-02	FIXED BROKEN TRACE ON POWER PLANE	KT	DL	10819

REVISIONS

REV	DATE	DESCRIPTION	DRAFTER	APPROVED	ECN
1	2-28-01	PROTOTYPE RELEASE	KT		—
2	6-8-01	ADDED C132-C136; CHGD C123,C124,R23,R192-R201; DEL C44, C48,R10,,R27,R59,R155,R159,R162,R206 & U23. NET CHANGES	KT		—
A	6-15-01	MODEL RELEASE	KT	JT	—
B	8-20-01	DEL C121; ADDED D3,D4,R228-R231; CHGD SOFTWARE FOR U2	KT	DL	10520
C	10-3-01	UPDATED SOFTWARE ON U17 TO VER 1.2	KT	DL	10533
D	3-27-02	ADDED U50,R232-R236,C137; MOVED R16,TIED U28-13 TO -5V, CHGD SOFTWARE ON U2 TO VER 1.3	KT	DL	10641

SEE NOTE 1

420-2104 2PLCS
423-2003 2PLCS
441-0198

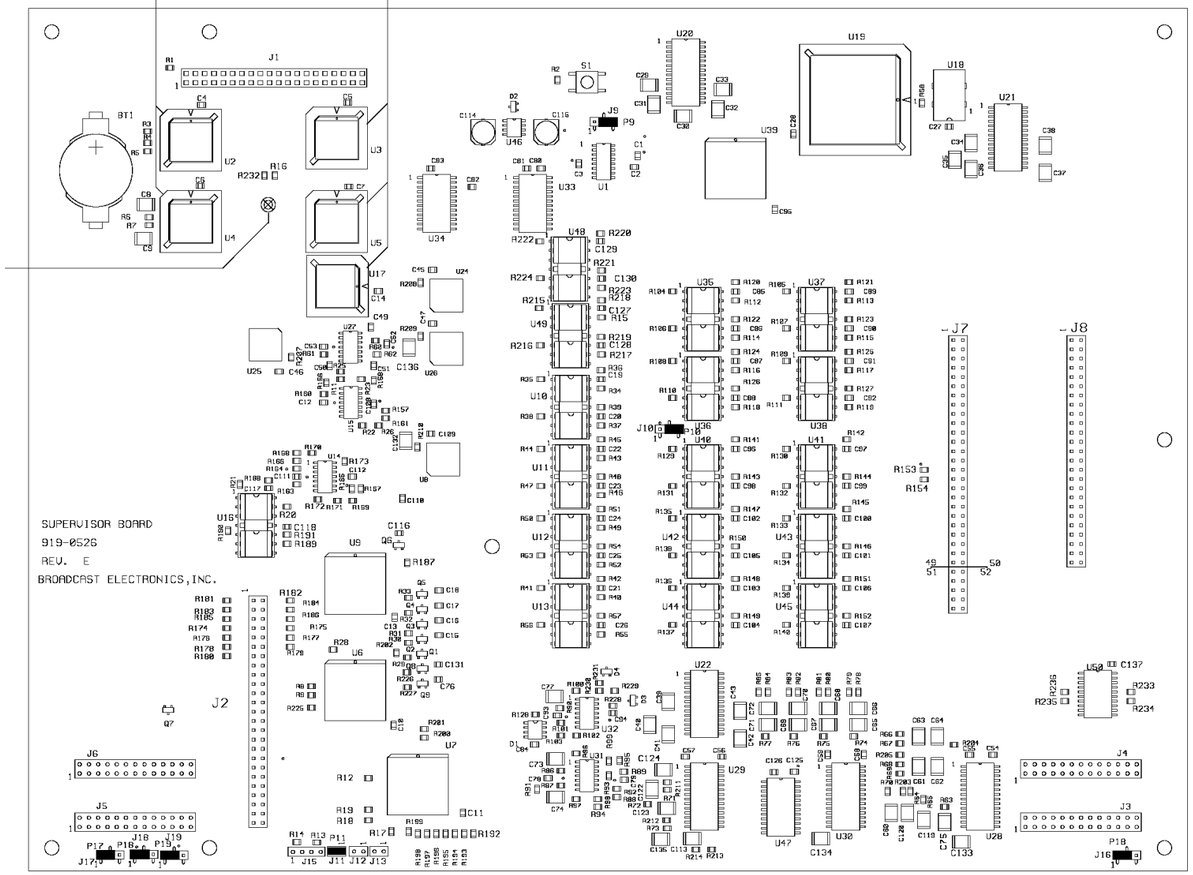

NOTES:

1) INSTALL SOFTWARE KIT
979-0526-002 VER 1.3 ON U2
INSTALL SOFTWARE KIT
979-0518-003 VER 1.0 ON U3
INSTALL SOFTWARE KIT
979-0518-004 VER 1.0 ON U4
INSTALL SOFTWARE KIT
979-0518-005 VER 1.0 ON U5
INSTALL SOFTWARE KIT
979-0523-017 VER 1.2 ON U17
MARK U2,U3,U4,U5,U17 WITH REVISION LEVEL, WITH LABEL APPLIED TO IC.

TOLERANCE (DECIMAL) U.O.S.
.X ± .030 .XXX ± .005
.XX ± .015 ANGLES ± 1°

DWN. BY KT 2-28-01
DESIGNER(S) 6-15-01 JIM TUCKER
PROJ. LEADER 6-15-01 MUKUNDA SHRESTHA
MFG.

MATERIAL
FINISH
NEXT ASSY.

BROADCAST ELECTRONICS INC.
4100 N. 24TH ST. P.O.BOX 3606 QUINCY,IL. 62305
217/224-9600 FAX 217/224-9607

TITLE PCB ASSEMBLY - SUPERVISOR BOARD

TYPE	SIZE	DWG No.	REV
A	C	919-0526	E

MODEL FM20S SCALE 1/1 SHEET 1 OF 1

REVISIONS					
REV	DATE	DESCRIPTION	DRAFTER	APPROVED	ECN
B	1-23-02	ADDED R1,R2,W3 & W4	KT	JT	10600
C	1-22-03	CHGD NET NAME ON J5 PINS 7 & 16	KT	DL	10881
D	5-22-03	MADE TB2 PIN 9 A SPARE	KT	DL	10982
E	8-14-03	CHGD R1 & R2	KT		11023
1	3-1-01	PROTOTYPE RELEASE.	KT		
2	6-15-01	MODEL RELEASE	KT		
A	10-23-01	CNGD NOTE 3, ENGINEERING RELEASE	KT	JLT	

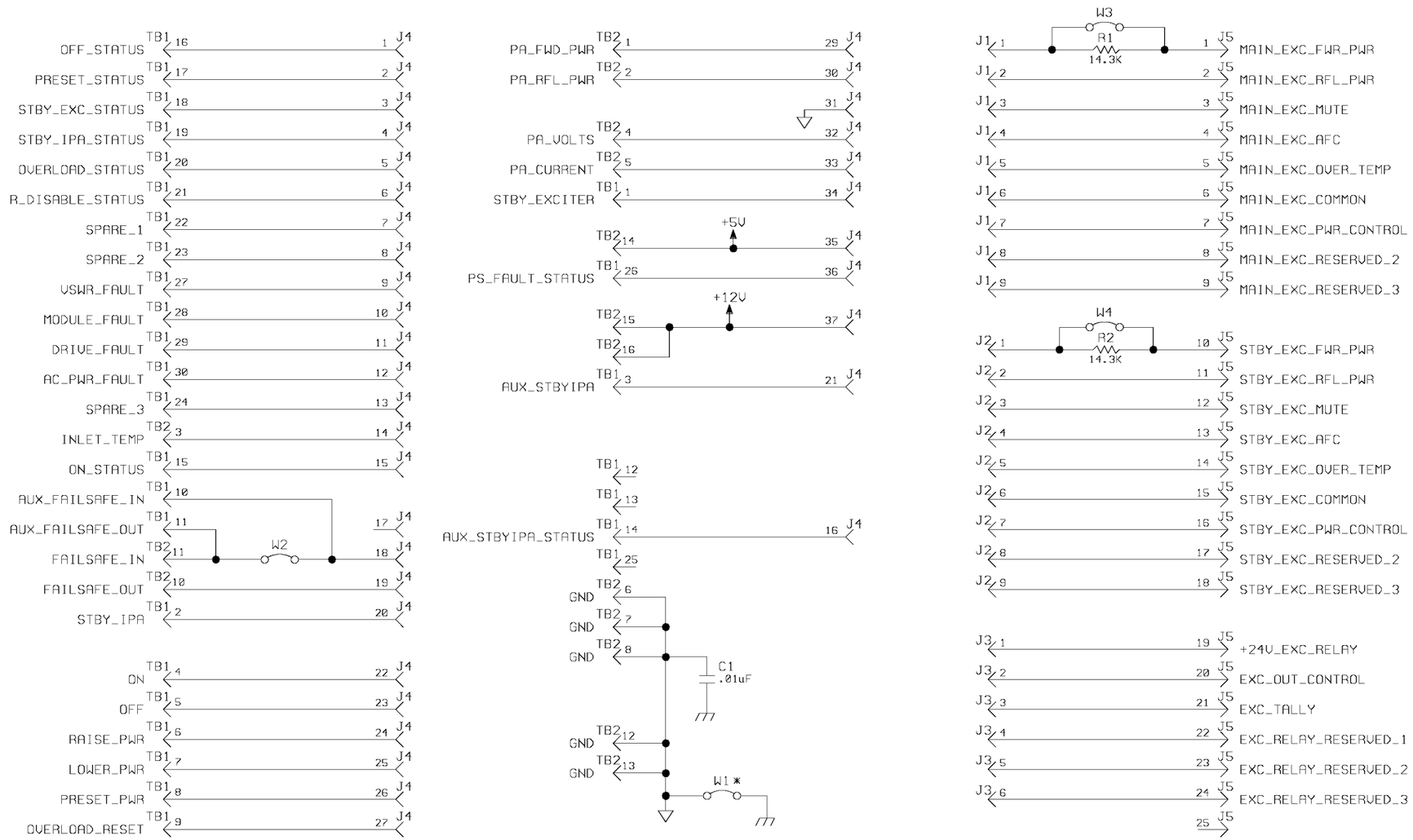

NOTES:
1) LAST COMPONENT C1,J5,TB2,R2 & W4.
2) SEE ASSEMBLY AC919-0528.
3) * W1 IS NOT INSTALLED.

TOLERANCE (DECIMAL) U.O.S.
.x ± .030 .xxx ± .005
.xx ± .015 ANGLES ± 1°

DWN. BY 3-1-01 K TERWELP
DESIGNER(S) JLT 5-15-01
PROJ. LEADER MBS 5-15-01
MFG.

MATERIAL SEE BOM 919-0528
FINISH
NEXT ASSY.

BROADCAST ELECTRONICS INC.
4100 N. 24TH ST., P.O.BOX 3606 QUINCY, IL. 62305
217/224-9600 FAX 217/224-9607

TITLE PCB ASSEMBLY REMOTE INTERFACE

TYPE	SIZE	DWG. NO.	REV
S	B	919-0528	E

MODEL FM-10S SCALE NONE SHEET 1 OF 1

REVISIONS					
REV	DATE	DESCRIPTION	DRAFTER	APPROVED	ECN
1	3-1-01	PROTOTYPE RELEASE.	KT		-----
2	6-15-01	MODEL RELEASE WITHOUT CHANGE	KT		-----
A	10-23-01	CHGD NOTE 4, ENGINEERING RELEASE	KT	JT	-----
B	1-25-02	ADDED R1,R2,W3,W4 & NOTE 5.	KT	JT	10600
C	8-14-03	CHGD R1 & R2	KT		11023

519-0528

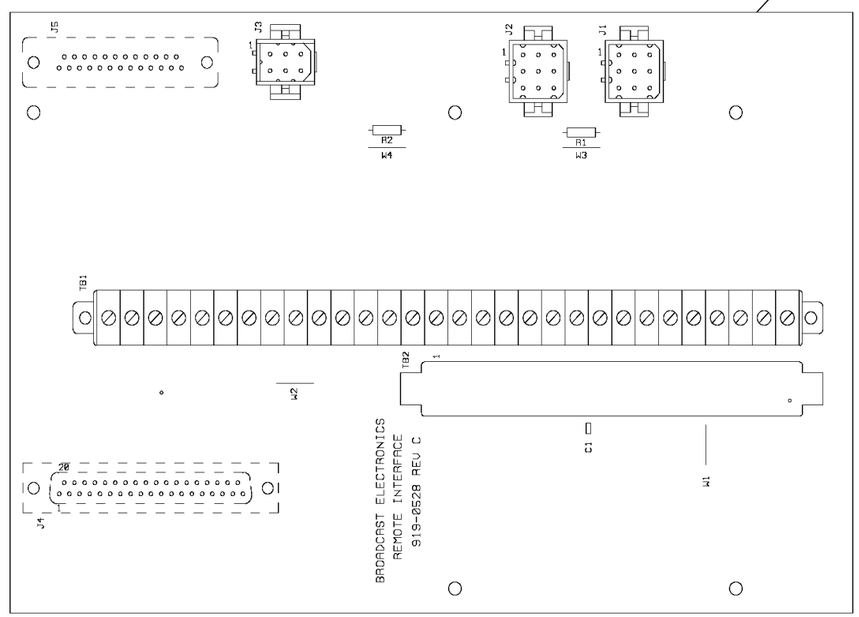

NOTES:

1) LAST COMPONENTS USED:
   C1,J5,R2,TB2 & W4.
2) SEE SCHEMATIC SB919-0528.
3) W1 IS NOT STUFFED DURING ASSEMBLY.,
4) USE 601-0022 FOR W2,W3,W4.
5) INSTALL W2,W3 & W4 DURING BOARD ASSEMBLY
   CLIP OUT W3 WHEN FX50 IS MAIN AND PREDATOR
   IS STANDBY EXCITER.
   CLIP OUT W4 WHEN PREDATOR IS MAIN AND FX50
   IS STANDBY EXCITER.

TOLERANCE (DECIMAL) U.O.S.
.X ± .030 .XXX ± .005
.XX ± .015 ANGLES ± 1°

DWN. BY 3-1-01
K. TERWELP
DESIGNER(S) 6-15-01
JIM L. TUCKER
PROJ. LEADER
MBS 6-15-01
MFG.

MATERIAL
SEE BOM
919-0528
FINISH
NEXT ASSY.

BROADCAST ELECTRONICS INC.
4100 N. 24TH ST. P.O.BOX 3606 QUINCY,IL. 62305
217/224-9600 FAX 217/224-9607

TITLE
PCB ASSEMBLY
REMOTE INTERFACE

TYPE	SIZE	DWG No.	REV
A	C	919-0528	C

MODEL FM-20S SCALE 1/1 SHEET 1 OF 1

REVISIONS

REV	DATE	DESCRIPTION	DRAFTER	APPROVED	ECN
A	11-14-01	ENGINEERING RELEASE	KT		-------
B	3-27-03	ADDED 919-0505-012 ASSEMBLY & NOTE 7	KT		10952

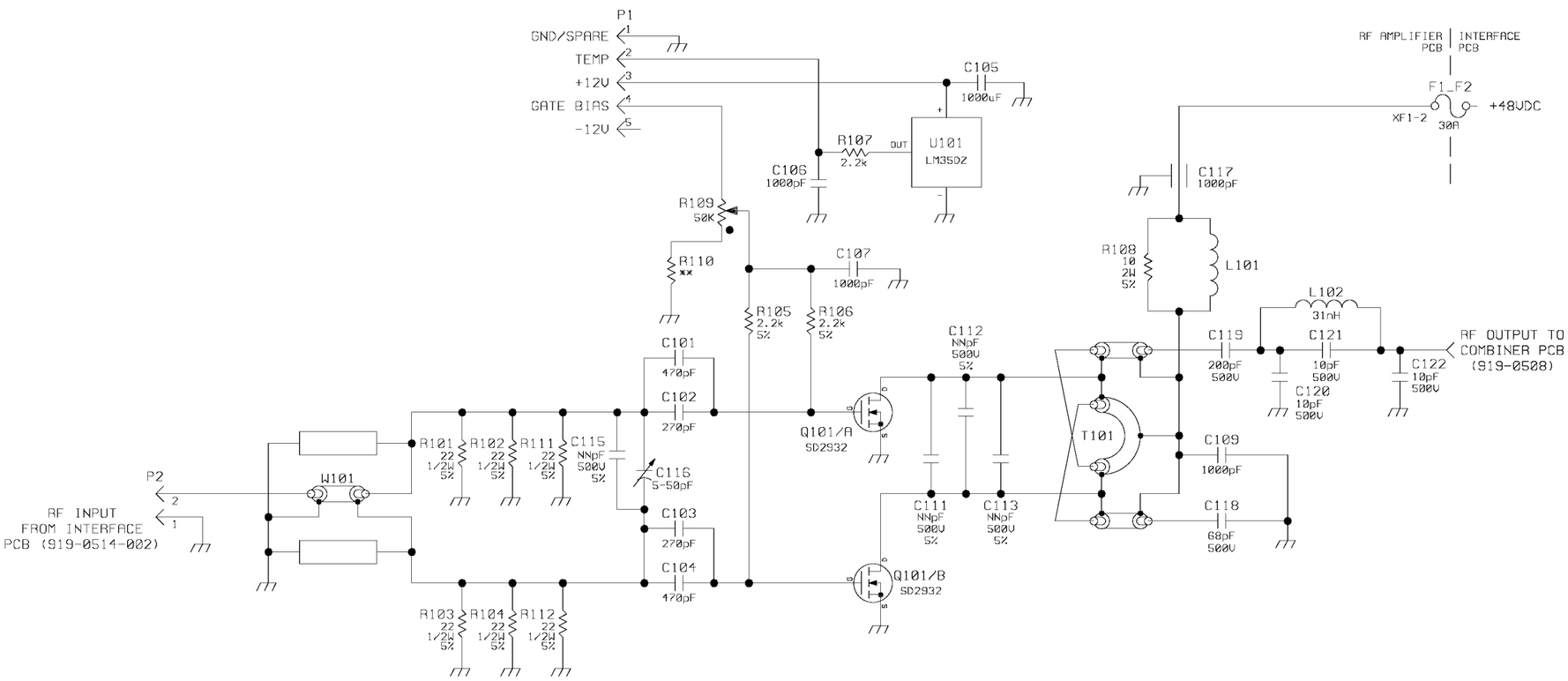

NOTES:

1. REFERENCE DESIGNATORS START AT 101.
2. ALL RESISTORS IN OHMS, 1/4W, 1%, UNLESS OTHERWISE SPECIFIED.
3. LAST COMPONENT USED: C122,L102,P2,Q101,R112, T101,U101,W101.
4. COMPONENTS NOT USED: C108,C110,C114.
5. SEE ASSEMBLYS: AB919-0505-012 & AB959-0505-012
6. C111-C113 & C115 VALUES TO BE DETERMINED DURING TEST.
7. R110 IS 200K FOR 919-0505
   R110 IS 10K FOR 919-0505-012

TOLERANCE (DECIMAL) U.O.S.
.x ± .030 .xxx ± .005
.xx ± .015 ANGLES ± 1°

DWN. BY KT 11-14-01
DESIGNER(S)
PROJ. LEADER
MFG.
MATERIAL
FINISH
NEXT ASSY. 959-0505-012 959-0505-001

BROADCAST ELECTRONICS INC.
4100 N. 24TH ST., P.O.BOX 3606 QUINCY, IL. 62305
217/224-9600 FAX 217/224-9607

TITLE SCHEMATIC RF AMP FM10S/FMi, ST MICRO

TYPE	SIZE	DWG. NO.	REV
S	C	919-0505/-012	B

MODEL FM-10S/20S SCALE NONE SHEET 1 OF 1

C	2-20-01	ADDED NOTE 4 & DETAIL A	KT	TH	10427
D	3-27-03	ADDED NOTE 5 & ASSEMBLY 919-0505-012	KT		10952

REVISIONS

REV	DATE	DESCRIPTION	DRAFTER	APPROVED	ECN
1	8-21-98	PROTOTYPE RELEASE.	MH	SJ	----
2	3-22-99	MAJOR CHANGES.	MH	SJ	----
3	6-2-99	CHGD D101;ADDED SHADING FOR SOLDERING OF W101.	MH	SJ	----
4	6-17-99	REMOVED L101,R108,Q101,T101 & W101 FROM 919-0505 ASSY; CHGD NOTES.	MH	SJ	----
5	8-25-99	ADDED R111,R112;DELETED D101.	MH	SJ	----
6	4-25-00	ADDED C118-C122,L102 & P2; DELETED C110 & C115; MOVED C109 & C116.	MH		----
7	5-16-00	CHGD ALIGNMENT SPECS FOR XF1-2 TO 2 PLACES.	MH		----
8	5-31-00	UPDATED ASSEMBLY NOTES AROUND DRAWING AND ADDED NOTES 2 & 3.	MH	MBS	----
A	6-13-00	CHGD R109 TO 50K; MODEL BUILD RELEASE.	MH	MBS	----
B	8-4-00	UPDATED NOTE 3; ENGINEERING RELEASE.	MH	JL	----

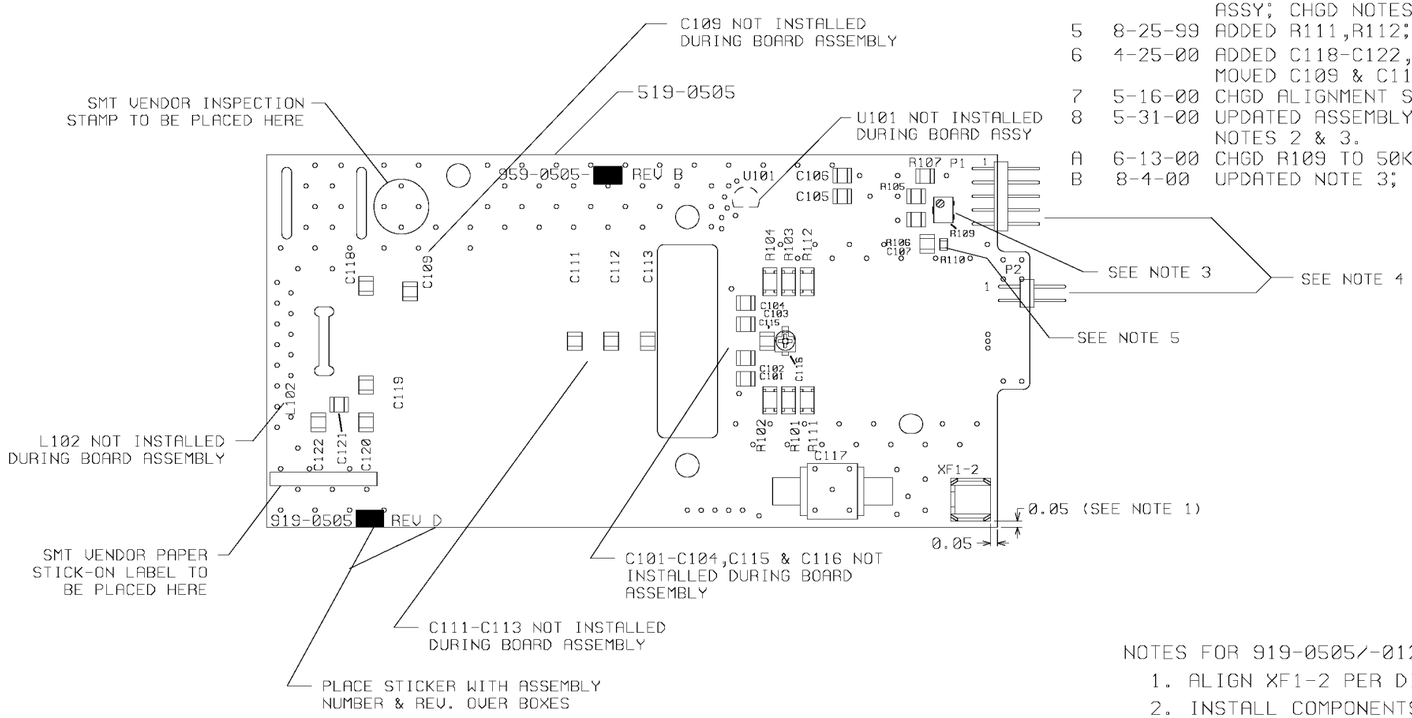

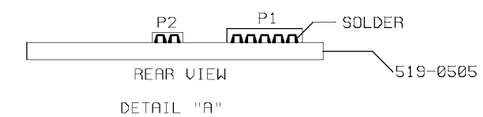

NOTES FOR 919-0505/-012 ASSY:

1. ALIGN XF1-2 PER DIMENSIONS SHOWN.
2. INSTALL COMPONENTS WITH COMPONENT MARKING VISIBLE.
3. REMOVE SEALING COMPOUND FROM COMPONENT TRIM POTS AFTER WASH.
4. P1 & P2 SHOULD BE SOLDERED AFTER REFLOW TO ASSURE EFFECTIVE AMOUNT OF SOLDER IS APPLIED TO JOINT SEE DETAIL "A".
5. R110 IS A 101-2003 FOR 919-0505
   R110 IS A 102-1002 FOR 919-0505-012

TOLERANCE (DECIMAL) U.O.S.
.X ± .030 .XXX ± .005
.XX ± .015 ANGLES ± 1°

DWN. BY 8-21-98
M. HAYDEN
DESIGNER(S)
PROJ. LEADER
MFG.

MATERIAL
SEE BOMS
919-0505/-012
FINISH
NEXT ASSY.
959-0505-001/-012

BROADCAST ELECTRONICS INC.
4100 N. 24TH ST. P.O.BOX 3606 QUINCY,IL. 62305
217/224-9600 FAX 217/224-9607

TITLE PCB SUB-ASSEMBLY RF AMPLIFIER

TYPE	SIZE	DWG No.	REV
A	B	919-0505/-012	D

MODEL FM-10S/20S SCALE 1/1 SHEET 1 OF 1

REVISIONS					
REV	DATE	DESCRIPTION	DRAFTER	APPROVED	ECN

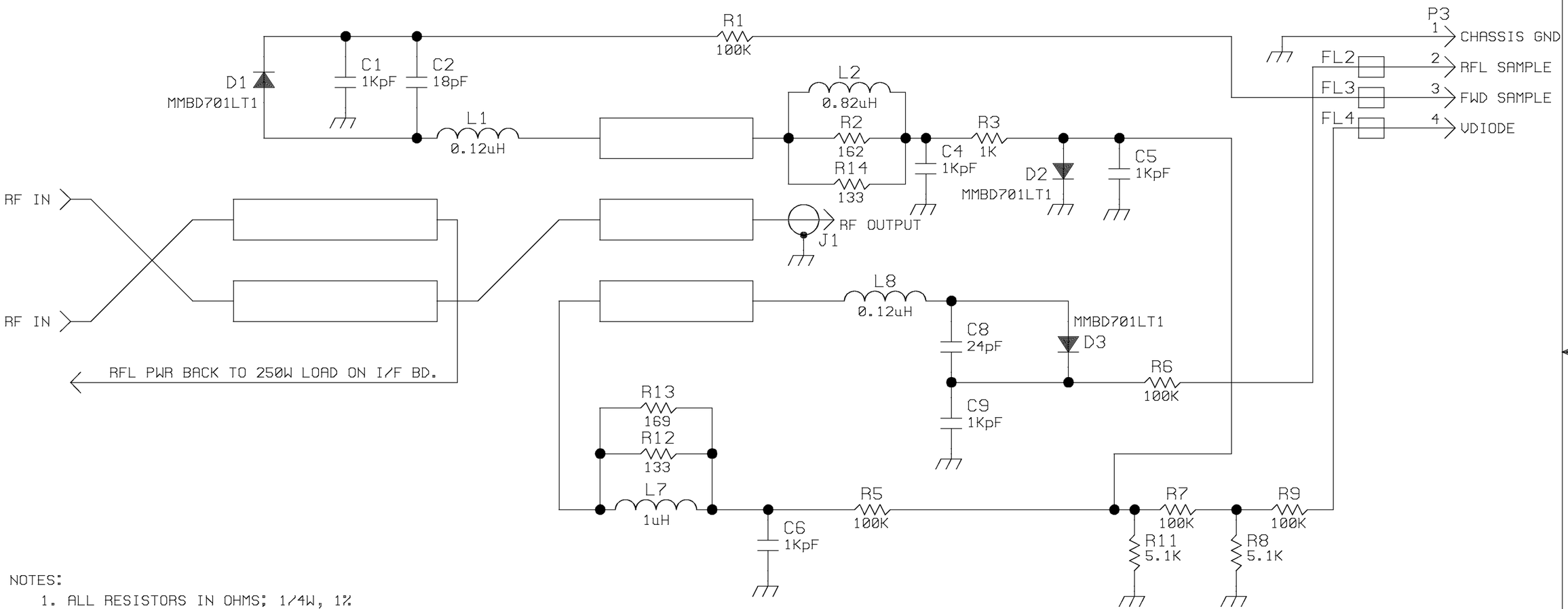

NOTES:

1. ALL RESISTORS IN OHMS; 1/4W, 1%
   UNLESS OTHERWISE SPECIFIED.
2. LAST COMPONENT USED:C9,D3,FL4,J1,L8,P3,R14.
3. COMPONENTS NOT USED:C3,C7,FL1,L3-L6,P1,P2,R4,R10.
4. SEE ASSEMBLY:AC919-0508.

TOLERANCE (DECIMAL) U.O.S.
.x ± .030 .xxx ± .005
.xx ± .015 ANGLES ± 1°

DWN. BY 4-13-99
M. HAYDEN

DESIGNER(S) 8-7-00
JAY LINDERER

PROJ. LEADER 8-7-00
M. SHRESTHA

MFG.

MATERIAL
SEE BOM
919-0508

FINISH

NEXT ASSY.

BROADCAST ELECTRONICS INC.
4100 N. 24TH ST., P.O.BOX 3606 QUINCY, IL. 62305
217/224-9600 FAX 217/224-9607

TITLE
SCHEMATIC
RF AMP COMBINER

TYPE	SIZE	DWG. NO.	REV
S	B	919-0508	A

MODEL FM-10S SCALE NONE SHEET 1 OF 1

REVISIONS					
REV	DATE	DESCRIPTION	DRAFTER	APPROVED	ECN

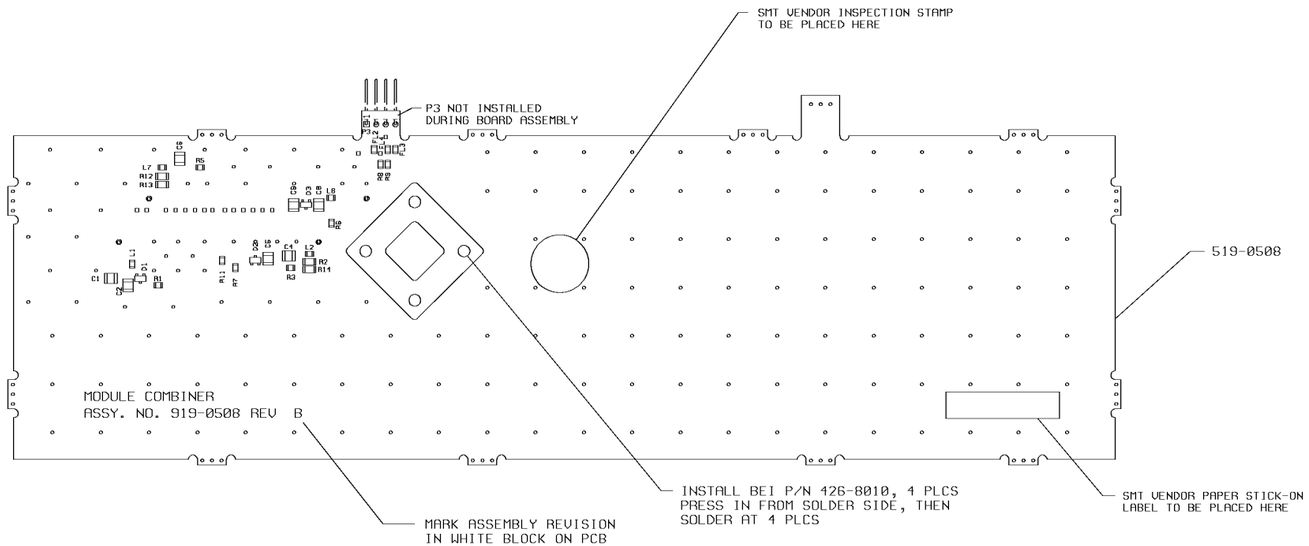

NOTES:
1. INSTALL COMPONENTS WITH COMPONENT MARKING VISIBLE.

TOLERANCE (DECIMAL) U.O.S.
.X ± .030 .XXX ± .005
.XX ± .015 ANGLES ± 1°

DWN. BY 3-31-99
M. HAYDEN
DESIGNER(S) 8-7-00
JAY LINDERER
PROJ. LEADER 8-7-00
M. SHRESTHA
MFG.

MATERIAL
SEE BOM
919-0508
FINISH
NEXT ASSY.

BROADCAST ELECTRONICS INC.
4100 N. 24TH ST. P.O.BOX 3606 QUINCY,IL. 62305
217/224-9600 FAX 217/224-9607

TITLE
PCB ASSEMBLY
MODULE COMBINER

TYPE	SIZE	DWG No.	REV
A	C	919-0508	B

MODEL FM10S | SCALE 1/1 | SHEET 1 OF 1

REVISIONS					
REV	DATE	DESCRIPTION	DRAFTER	APPROVED	ECN
A	11-14-01	ENGINEERING RELEASE	KT	TH	----
B	2-4-02	REPLACED FILTERS; ADDED U6 AREA; DEL L1 & C20	KT	TH	10708
C	11-13-02	PLACED R26	KT		10832

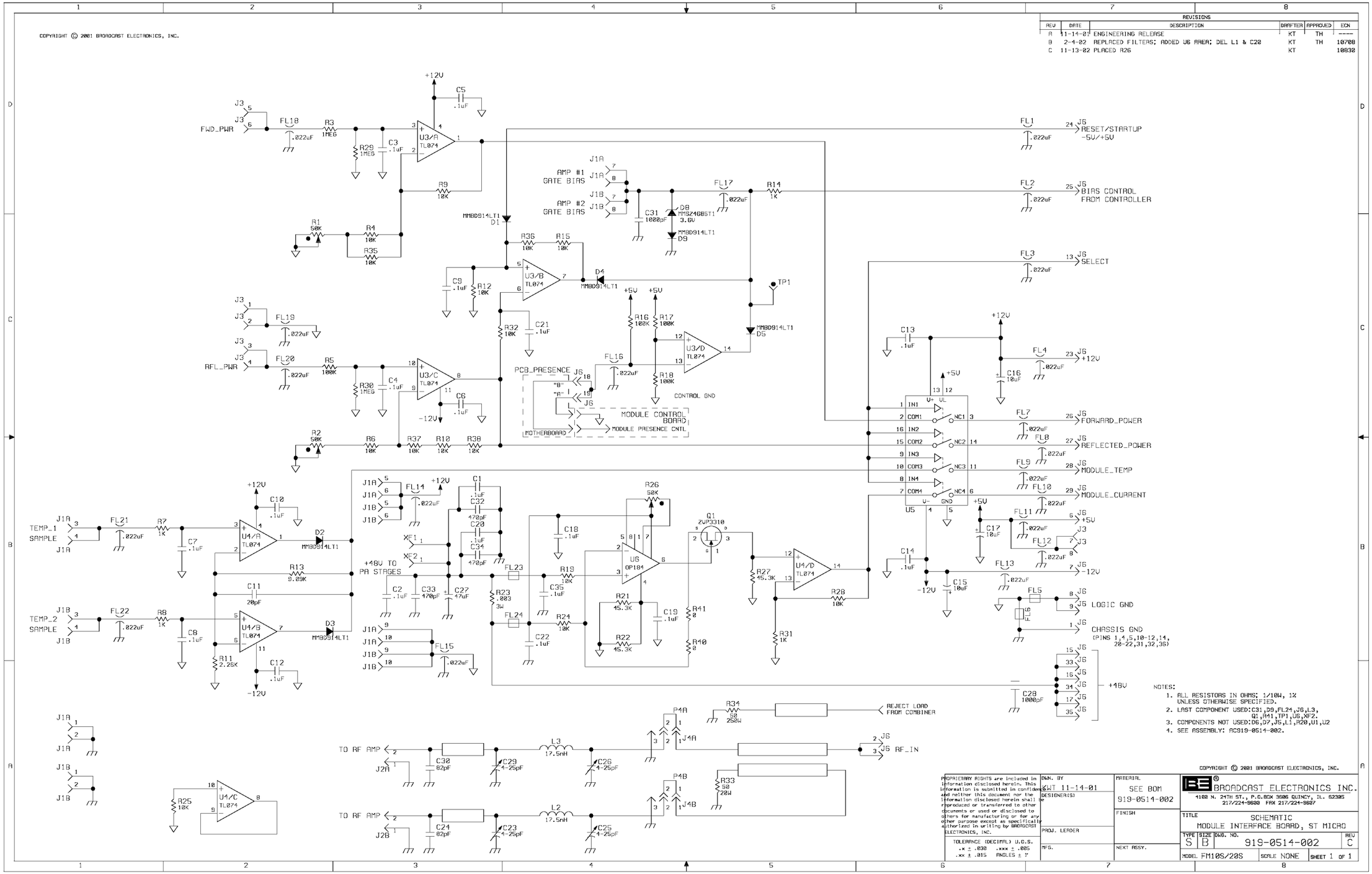

NOTES:
1. ALL RESISTORS IN OHMS; 1/10W, 1% UNLESS OTHERWISE SPECIFIED.
2. LAST COMPONENT USED:C31,D9,FL24,J6,L3, Q1,R41,TP1,U6,XF2.
3. COMPONENTS NOT USED:D6,D7,J5,L1,R20,U1,U2
4. SEE ASSEMBLY: AC919-0514-002.

PROPRIETARY RIGHTS are included in information disclosed herein. This information is submitted in confidence and neither this document nor the information disclosed herein shall be reproduced or transferred to other documents or used or disclosed to others for manufacturing or for any other purpose except as specifically authorized in writing by BROADCAST ELECTRONICS, INC.

TOLERANCE (DECIMAL) U.O.S.
.x ± .030 .xxx ± .005
.xx ± .015 ANGLES ± 1°

DWN. BY KWT 11-14-01
DESIGNER(S)
PROJ. LEADER
MFG.

MATERIAL SEE BOM 919-0514-002
FINISH
NEXT ASSY.

BROADCAST ELECTRONICS INC.
4102 N. 24TH ST., P.O.BOX 3606 QUINCY, IL. 62305
217/224-9600 FAX 217/224-9687

TITLE SCHEMATIC
MODULE INTERFACE BOARD, ST MICRO

TYPE	SIZE	DWG. NO.	REV
S	B	919-0514-002	C

MODEL FM10S/20S SCALE NONE SHEET 1 OF 1

REVISIONS

REV	DATE	DESCRIPTION	DRAFTER	APPROVED	ECN
A	11-14-01	ENGINEERING RELEASE	KT	TH	----
B	2-4-02	RELAID OUT CAN AREA, CHGD WIRE	KT	TH	
C	6-20-02	REMOVED R20, CHGD R27.	KT	TH	10708
D	11-13-02	ADDED R26 BACK ON THE BOM	KT		10830

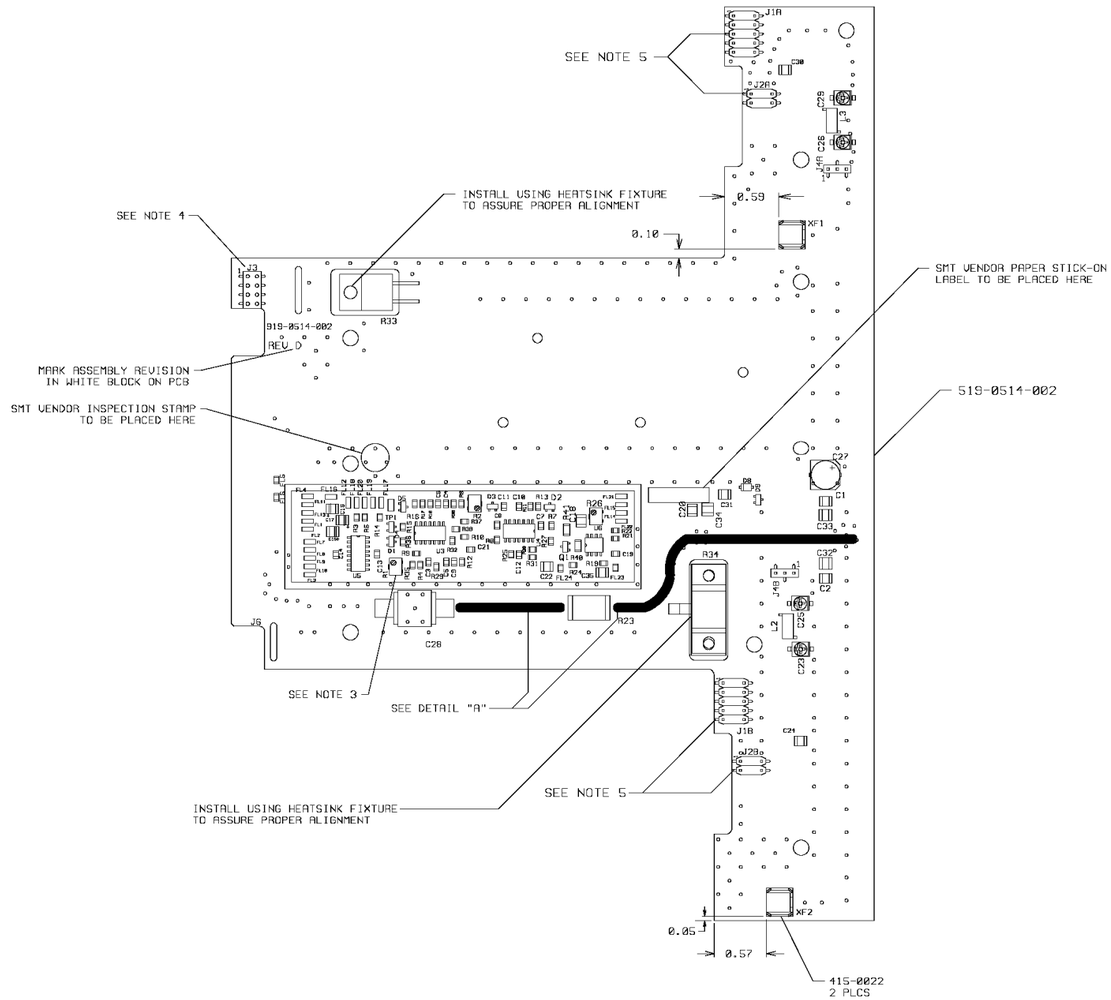

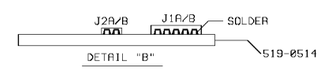

NOTES:

1. SEE SCHEMATIC SB919-0514-002.
2. INSTALL COMPONENTS WITH COMPONENT MARKING VISIBLE.
3. REMOVE SEALING COMPOUND FROM COMPONENT TRIM POTS AFTER WASH.
4. PLACE J3 AFTER REFLOW.
5. J1A,J1B,J2A & J2B SHOULD BE SOLDERED AFTER REFLOW TO ASSURE EFFFECTIVE AMOUNT OF SOLDER IS APPLIED TO JOINT, SEE DETAIL "B".

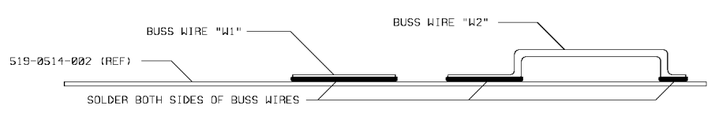

DETAIL "A"

TOLERANCE (DECIMAL) U.O.S.
.X ± .030 .XXX ± .005
.XX ± .015 ANGLES ± 1°

DWN. BY: KT 11-13-01
DESIGNER(S):
PROJ. LEADER:
MFG.

MATERIAL: SEE BOM 919-0514-002
FINISH:
NEXT ASSY.

BROADCAST ELECTRONICS INC.
4100 N. 24TH ST. P.O.BOX 3606 QUINCY,IL. 62305
217/224-9620 FAX 217/224-9607

TITLE: PCB ASSEMBLY
RF AMP INTERFACE, ST MICRO

TYPE	SIZE	DWG No.	REV
A	C	919-0514-002	D

MODEL FM-10S/20S | SCALE 1/1 | SHEET 1 OF 1

REVISIONS					
REV	DATE	DESCRIPTION	DRAFTER	APPROVED	ECN
1	3-2-01	PROTOTYPE RELEASE.	KT		-----
2	6-15-01	SEE SHEET 2: MODEL RELEASE	KT		----
A	10-23-01	ENGINEERING RELEASE WITHOUT CHANGE	KT	JT	----
B	1-22-03	ADDED FL70 & FL71	KT		10881

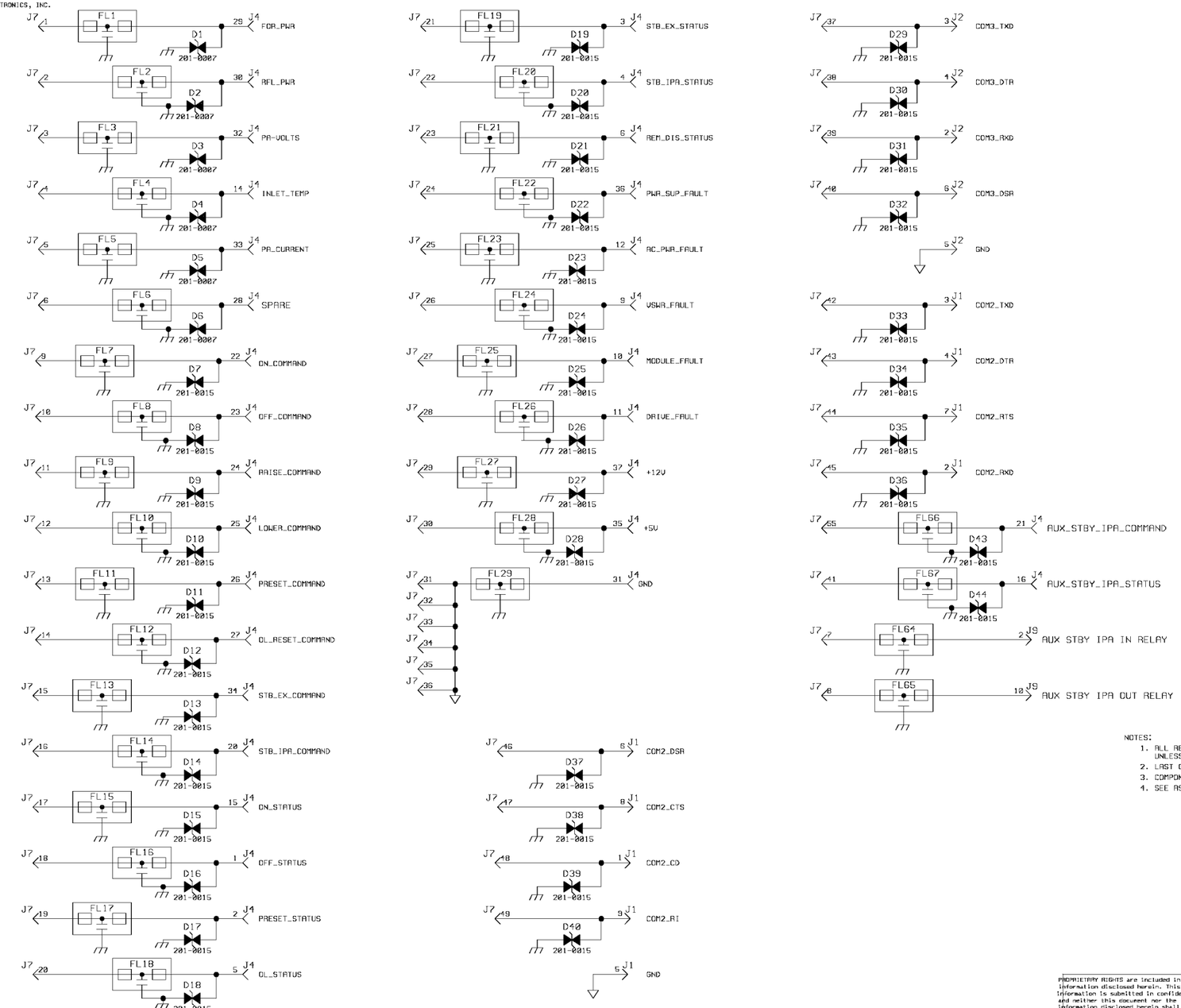

NOTES:
1. ALL RESISTORS IN OHMS; 1/4W, 1%
   UNLESS OTHERWISE SPECIFIED.
2. LAST COMPONENT USED:C16,D44,FL71,J9,R26.
3. COMPONENTS NOT USED:C1-C8,R1-R11.
4. SEE ASSEMBLY:AC919-0527

TOLERANCE (DECIMAL) U.O.S.
.x ± .030 .xxx ± .005
.xx ± .015 ANGLES ± 1°

DWN. BY KWT 3-2-01
DESIGNER(S) JAMES L. TUCKER 6-15-01
PROJ. LEADER MUKUNDA SHRESTHA 6-15-01
MFG.

MATERIAL SEE BOM 919-0527
FINISH
NEXT ASSY.

BROADCAST ELECTRONICS INC.
4100 N. 24TH ST., P.O.BOX 3606 QUINCY, IL. 62305
217/224-9600 FAX 217/224-9607

TITLE SCHEMATIC I/O BOARD

TYPE	SIZE	DWG. NO.	REV
S	B	919-0527	B

MODEL FM-20S SCALE NONE SHEET 1 OF 2

REVISIONS					
REV	DATE	DESCRIPTION	DRAFTER	APPROVED	ECN
1	3-2-01	PROTOTYPE RELEASE.	KT		
2	6-15-01	CHGD J6 TO 417-2010; MODEL RELEASE	KT	JT	
B	1-22-03	ADDED FL70 & FL71	KT		10881

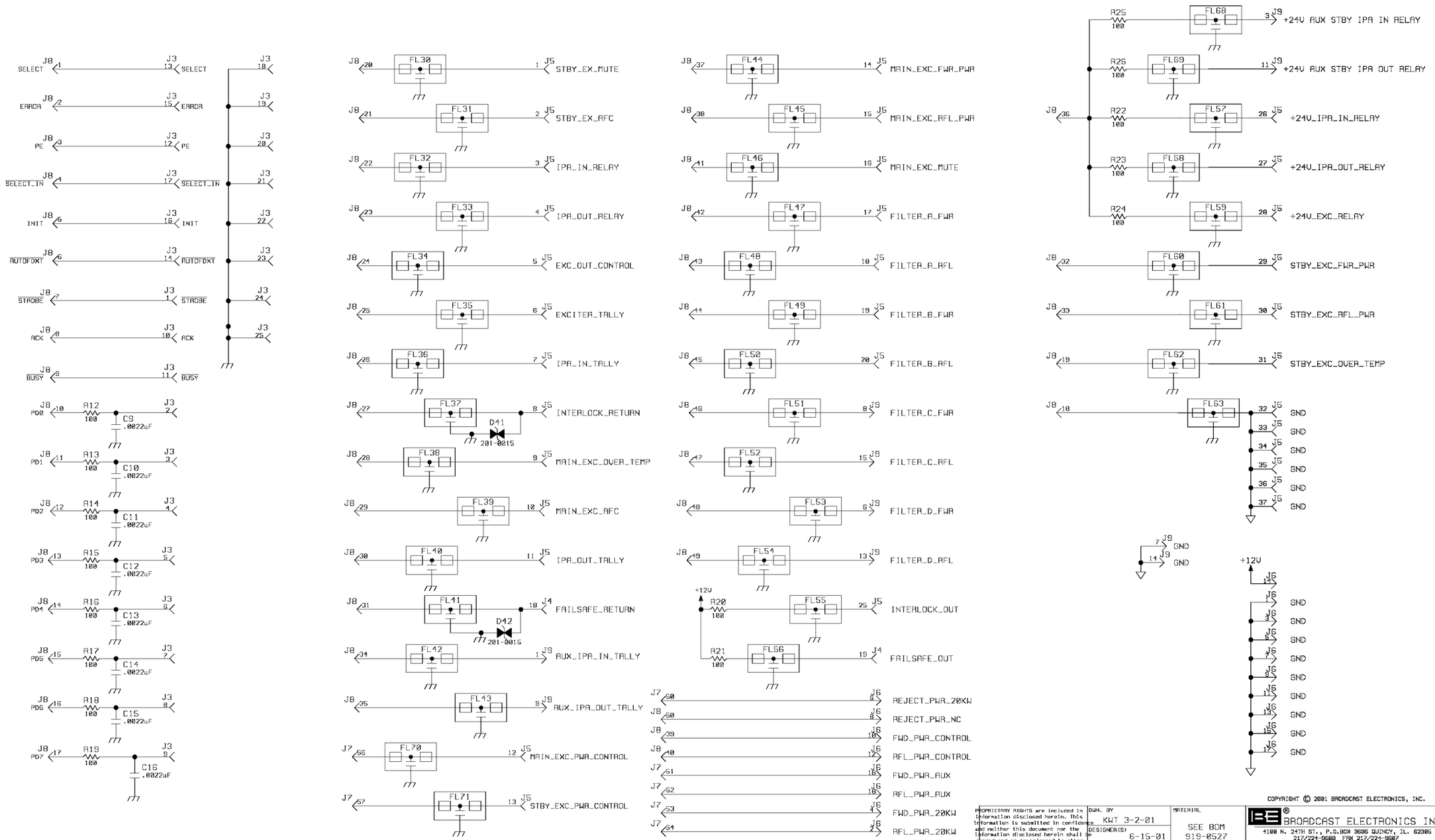

TOLERANCE (DECIMAL) U.O.S.
.x ± .030 .xxx ± .005
.xx ± .015 ANGLES ± 1°

DWN. BY KWT 3-2-01
DESIGNER(S) 6-15-01
JAMES L. TUCKER
PROJ. LEADER 6-15-01
MUKUNDA SHRESTHA
MFG.

MATERIAL SEE BOM 919-0527
FINISH
NEXT ASSY. 919-0527

BROADCAST ELECTRONICS INC.
4100 N. 24TH ST., P.O.BOX 9686 QUINCY, IL. 62305
217/224-9600 FAX 217/224-9607

TITLE SCHEMATIC I/O BOARD

TYPE	SIZE	DWG. NO.	REV
S	B	919-0527	B

MODEL FM-20S SCALE NONE SHEET 2 OF 2

REVISIONS					
REV	DATE	DESCRIPTION	DRAFTER	APPROVED	ECN
1	3-5-01	PROTOTYPE RELEASE.	KT		----
2	6-11-01	MOVED J7,D35,D36,D37 & D39	KT		----
3	6-15-01	CHANGED J6 TO 417-2010; MODEL RELEASE	KT		----
A	10-23-01	ENGINEERING RELEASE WITHOUT CHANGE	KT	JT	----
B	1-22-03	ADDED FL70 & FL71	KWT	JT	10881
C	5-23-03	ADDED -100 ASSEMBLY AND NOTE	KWT		10981

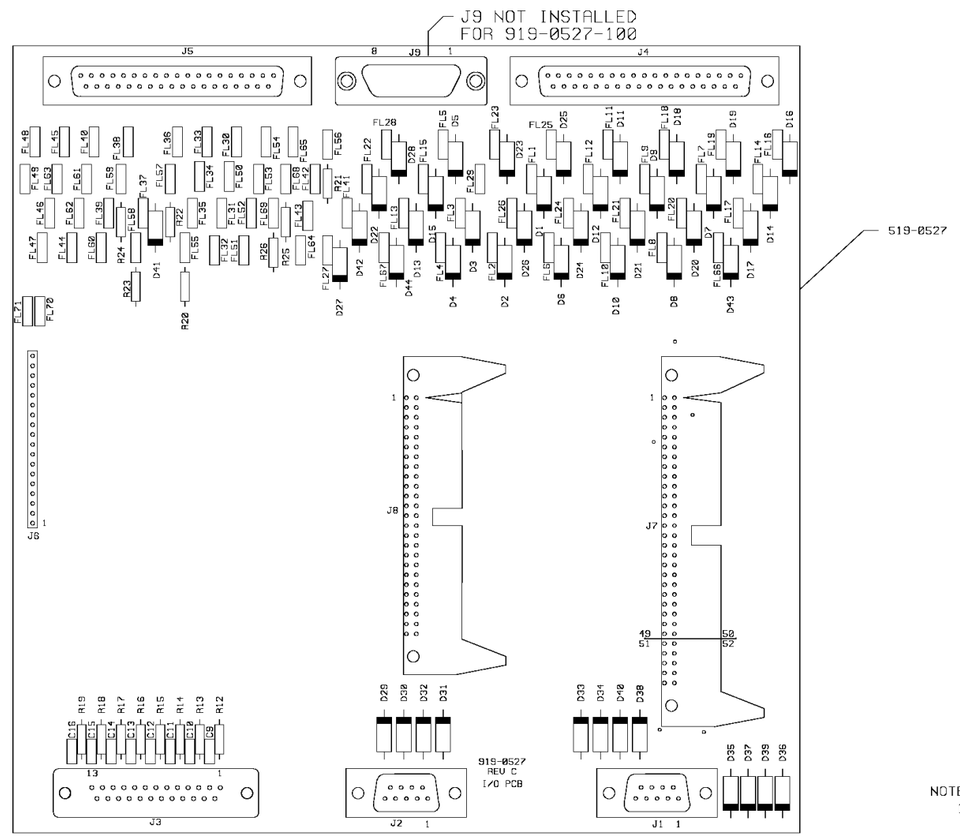

NOTES:
1. REFERENCE SCHEMATIC SB919-0527.

TOLERANCE (DECIMAL) U.O.S.
.X ± .030 .XXX ± .005
.XX ± .015 ANGLES ± 1°

DWN. BY KT 3-5-01
DESIGNER(S) 6-15-01 JIM L. TUCKER
PROJ. LEADER 6-15-01 MUKUNDA SHRESTHA
MFG.

MATERIAL SEE BOMS 919-0527/-100
FINISH
NEXT ASSY.

BROADCAST ELECTRONICS INC.
4100 N. 24TH ST. P.O.BOX 3606 QUINCY,IL. 62305
217/224-9600 FAX 217/224-9607

TITLE PCB ASSEMBLY I/O BOARD

TYPE	SIZE	DWG No.	REV
A	C	919-0527/-100	C

MODEL FM-20S SCALE 1/1 SHEET 1 OF 1

REVISIONS					
REV	DATE	DESCRIPTION	DRAFTER	APPROVED	ECN
1	3-6-01	PROTOTYPE RELEASE	KT		-----
2	6-15-01	INDICATED PARTS NOT STUFFED: MODEL RELEASE	KT		-----
A	10-23-01	ENGINEERING RELEASE WITHOUT CHANGE	KT		-----

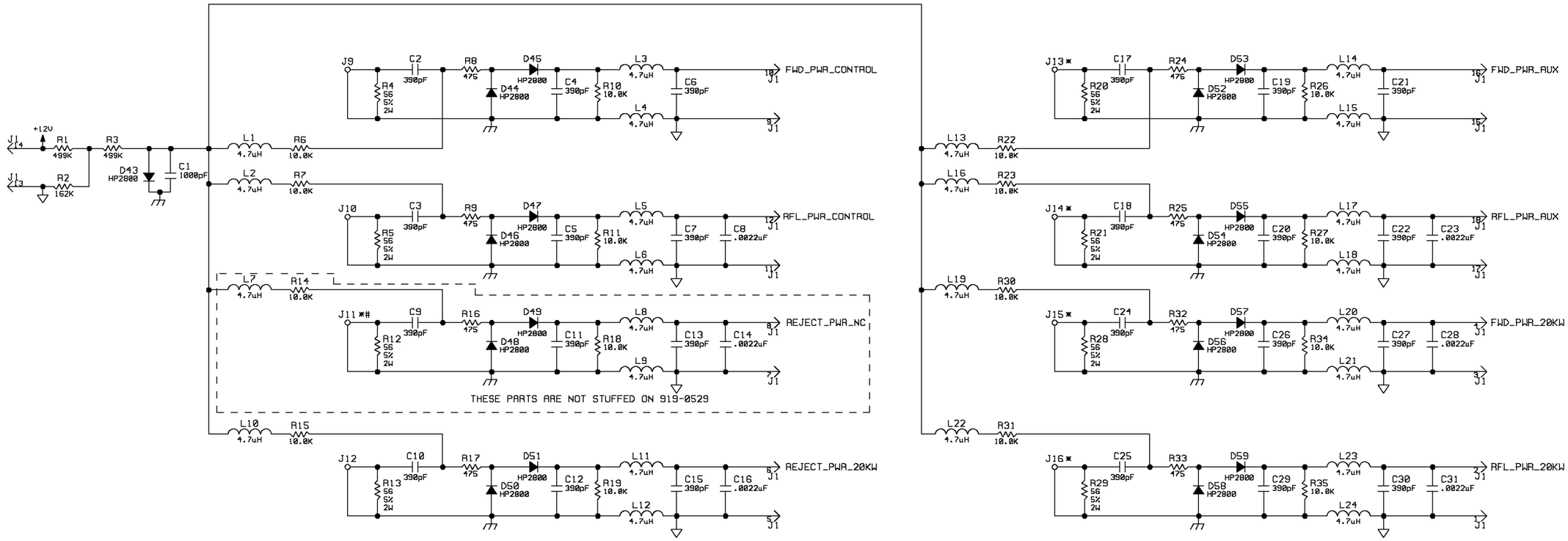

NOTES:

1. ALL RESISTORS IN OHMS; 1/4W, 1%
   UNLESS OTHERWISE SPECIFIED.
2. LAST COMPONENT USED: C31,D59,J16,L24,R35.
3. COMPONENTS NOT USED:D1-D42,J2-J8
4. SEE ASSEMBLY: ACS19-0529/-001
5. * INDICATES PARTS NOT STUFFED ON 919-0529-001
   FOR FM-10S (J11,J13,J14,J15,J16)
6. # INDICATES PARTS NOT STUFFED ON 919-0529
   FOR FM-20S (J11)

TOLERANCE (DECIMAL) U.O.S.
.x ± .030 .xxx ± .005
.xx ± .015 ANGLES ± 1

DWN. BY KT 3-6-01
DESIGNER(S) MBS 5-15-01
PROJ. LEADER MBS 5-15-01
MFG.

MATERIAL SEE BOM 919-0529
FINISH
NEXT ASSY.

BE® BROADCAST ELECTRONICS INC.
4100 N. 24TH ST., P.O. BOX 3606 QUINCY, IL. 62305
217/224-9600 FAX 217/224-9607

TITLE DIRECTIONAL COUPLER

TYPE	SIZE	DWG. NO.	REV
S	B	919-0529	A

MODEL FM-20S SCALE NONE SHEET 1 OF 1

REVISIONS					
REV	DATE	DESCRIPTION	DRAFTER	APPROVED	ECN
1	3-6-01	PROTOTYPE RELEASE.	KT		----
2	6-15-01	INDICATED PARTS NOT STUFFED,CHGD J1:MODEL RELEASE	KT	MBS	----
3	8-17-01	CHGD NOTE 2	KT		----
A	10-23-01	ENGINEERING RELEASE WITHOUT CHANGE	KT		----

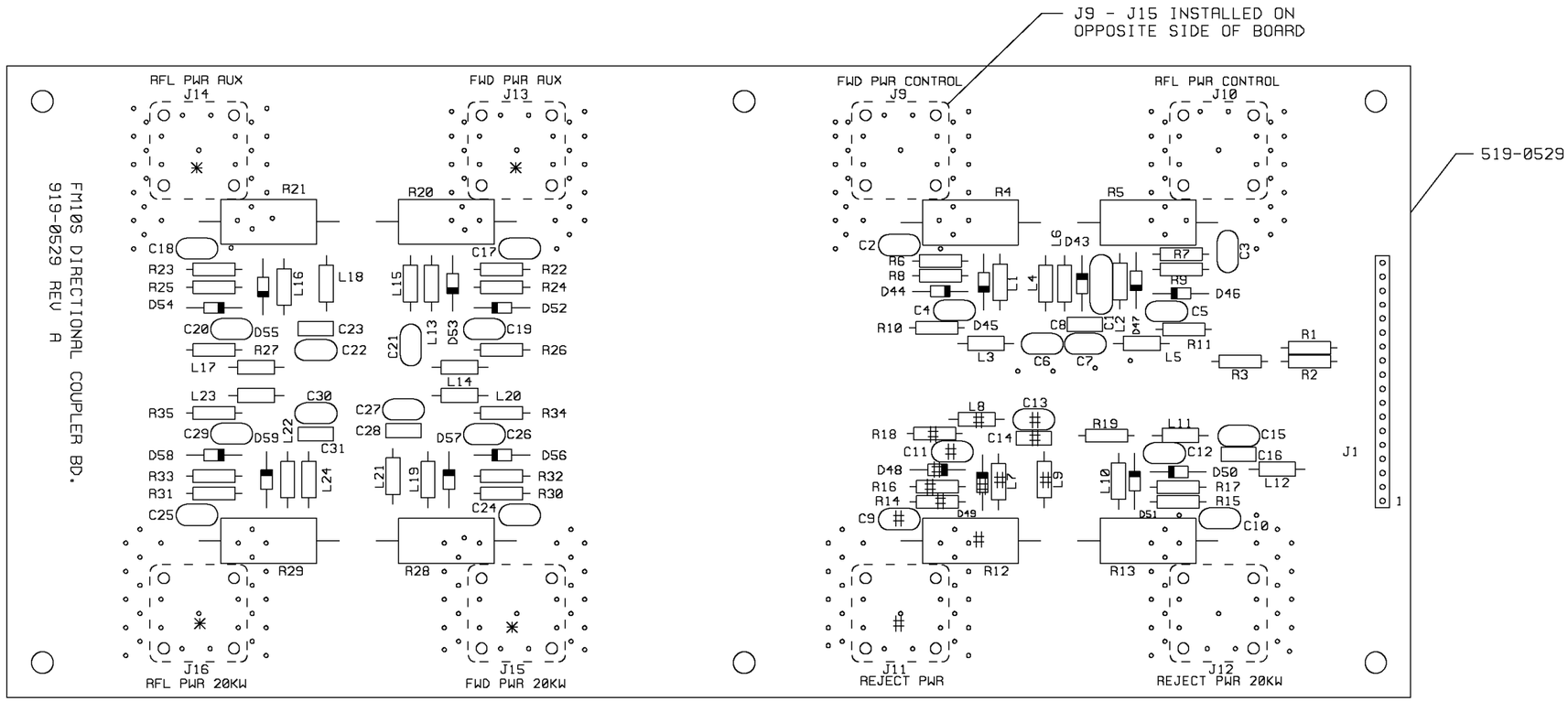

NOTES:

1. REFERENCE SCHEMATIC SB919-0529.
2. * INDICATES COMPONENTS NOT STUFFED ON 919-0529-001 (J13-J16)
3. # INDICATES COMPONENTS NOT STUFFED ON 919-0529 & 919-0529-001 (C9,C11, C13,C14,D48,D49,J11,L7,L8,L9,R12, R14,R16,R18)

TOLERANCE (DECIMAL) U.O.S.
.X ± .030 .XXX ± .005
.XX ± .015 ANGLES + 1°

DWN. BY: KT 3-6-01
DESIGNER(S): MBS 5-15-01
PROJ. LEADER: MBS 5-15-01
MFG.

MATERIAL: SEE BOMS 919-0529 919-0529-001
FINISH
NEXT ASSY.

BROADCAST ELECTRONICS INC.
4100 N. 24TH ST. P.O.BOX 3606 QUINCY,IL. 62305
217/224-9600 FAX 217/224-9607

TITLE: PCB ASSEMBLY DIRECTIONAL COUPLER

TYPE	SIZE	DWG No.	REV
A	B	919-0529/-001	A

MODEL FM-10S/20S | SCALE 1/1 | SHEET 1 OF 1

REVISIONS					
REV	DATE	DESCRIPTION	DRAFTER	APPROVED	ECN
A	11-14-01	ENGINEERING RELEASE	KT		----
B	4-9-03	ADDED -012 ASSEMBLY	KT		10952

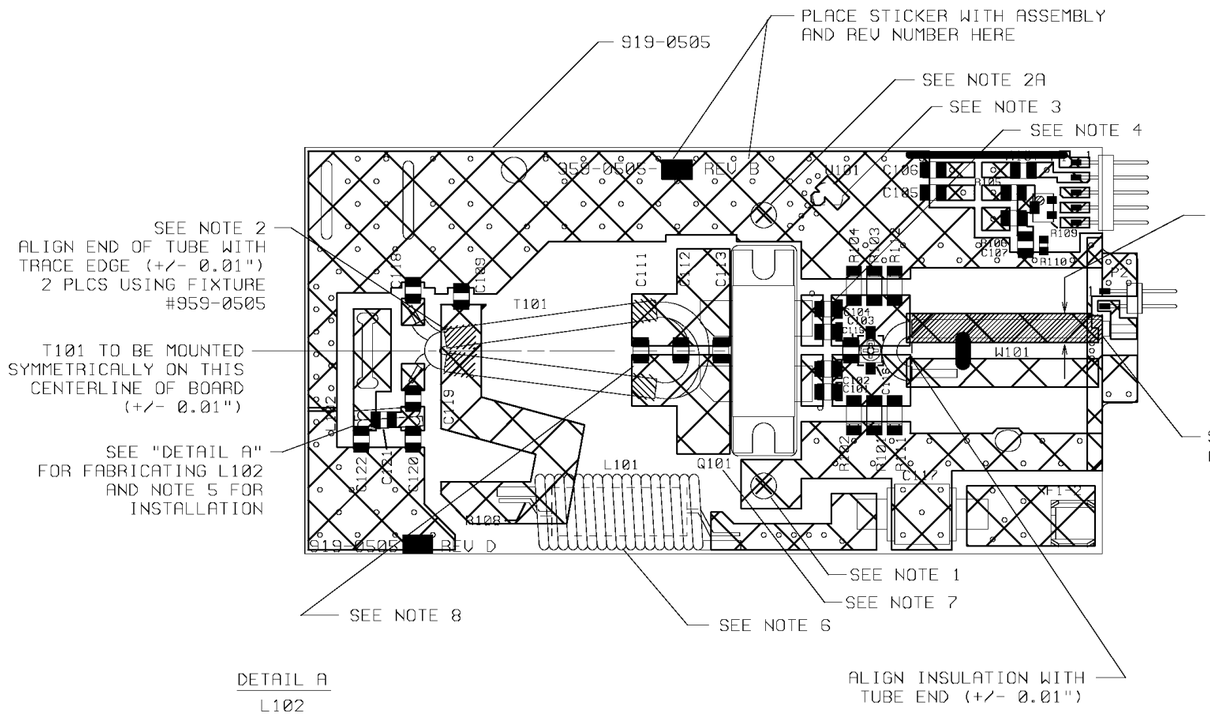

NOTES:

1. PLACE PCB ON HEATSINK FIXTURE #919-0505 WITH SUB-BOARD 519-0507 USING 422-6106 SCREW AT LOCATION SHOWN.
2. INSTALL T101(#370-0062) & W101(#370-0063) FIRST PER INSTRUCTIONS ON DRAWING. OUTER CONDUCTORS OF T101 & W101 TO BE SOLDERED TO PCB WHERE INDICATED BY SHADING USING RF AMP FIXTURE #959-0505. SOLDER INNER CONDUCTORS OF T101 & W101 AS SHOWN.

2A. WHEN FINISHED USING FIXTURE #959-0505, INSTALL 422-6106 SCREW AT LOCATION SHOWN.

3. U101 TO BE MOUNTED ON OPPOSITE SIDE OF PCB (0.30" HEIGHT FROM BOARD SURFACE TO TOP OF COMPONENT).
4. INSTALL CAPACITORS C101-C104, C109 & C116 AS SHOWN. C101-C104 & C116 MUST BE POSITIONED IN BETWEEN LOCATOR MARKS SHOWN ON SILKSCREEN. FOR INSTALLATION OF C101-C104 USE SN 96.3 AG 3.7 SILVER SOLDER (#700-0170).
5. L102 TO BE SOLDERED OVER C121 AS SHOWN.
6. R108 TO BE INSERTED INSIDE OF L101 AND SOLDERED AS SHOWN.
7. Q101 DRAIN LEADS (ANGLE CUT) TO BE PRE-TREATED BY IMMERSION IN FLOW SOLDER FOR 5-7 SECONDS. GATE LEADS (STRAIGHT CUT) TO BE TRIMMED TO A LENGTH OF 0.12" FROM THE BODY OF THE PART. MOUNT Q101 TO PCB USING 420-4106 & 423-4002, 2 PLCS. TORQUE BOTH SCREWS TO 5-6 IN. LBS. ATTACH LEADS TO PCB USING SN 96.3 AG 3.7 SILVER SOLDER (#700-0170). REMOVE HARDWARE FOR Q101 AFTER LEADS ARE SOLDERED. (STATIC SENSITIVE PART)
8. THE INSTALLATION AND VALUES OF C111-C113 & C115 TO BE DETERMINED DURING BOARD TESTING. USE SN 96.3 AG 3.7 SILVER SOLDER (#700-0170) TO INSTALL C111-C113.

DETAIL A

L102

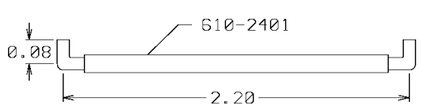

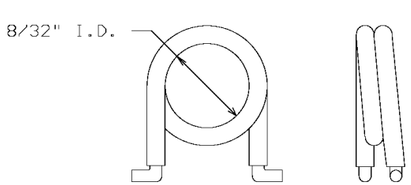

1. CUT WIRE (610-2401) TO 2.40" LENGTH.
2. STRIP BOTH ENDS 0.15".
3. WIND COIL 1 1/2 TURNS ON 8/32" I.D. AS SHOWN USING FIXTURE #L102.
4. BEND LEAD AT BOTH ENDS AS SHOWN.

TOLERANCE (DECIMAL) U.O.S.
.X ± .030 .XXX ± .005
.XX ± .015 ANGLES ± 1°

DWN. BY KT 11-14-01
DESIGNER(S)
PROJ. LEADER
MFG.

MATERIAL SEE BOMS
959-0505-001
959-0505-012
FINISH
NEXT ASSY.

BROADCAST ELECTRONICS INC.
4100 N. 24TH ST. P.O.BOX 3606 QUINCY,IL. 62305
217/224-9600 FAX 217/224-9607

TITLE PCB ASSEMBLY
RF AMPLIFIER, ST MICRO

TYPE	SIZE	DWG No.	REV
A	B	959-0505-001/-012	D

MODEL FM-10S/20S SCALE 1/1 SHEET 1 OF 1

REVISIONS					
REV	DATE	DESCRIPTION	DFTSMN	ENGR	ECN

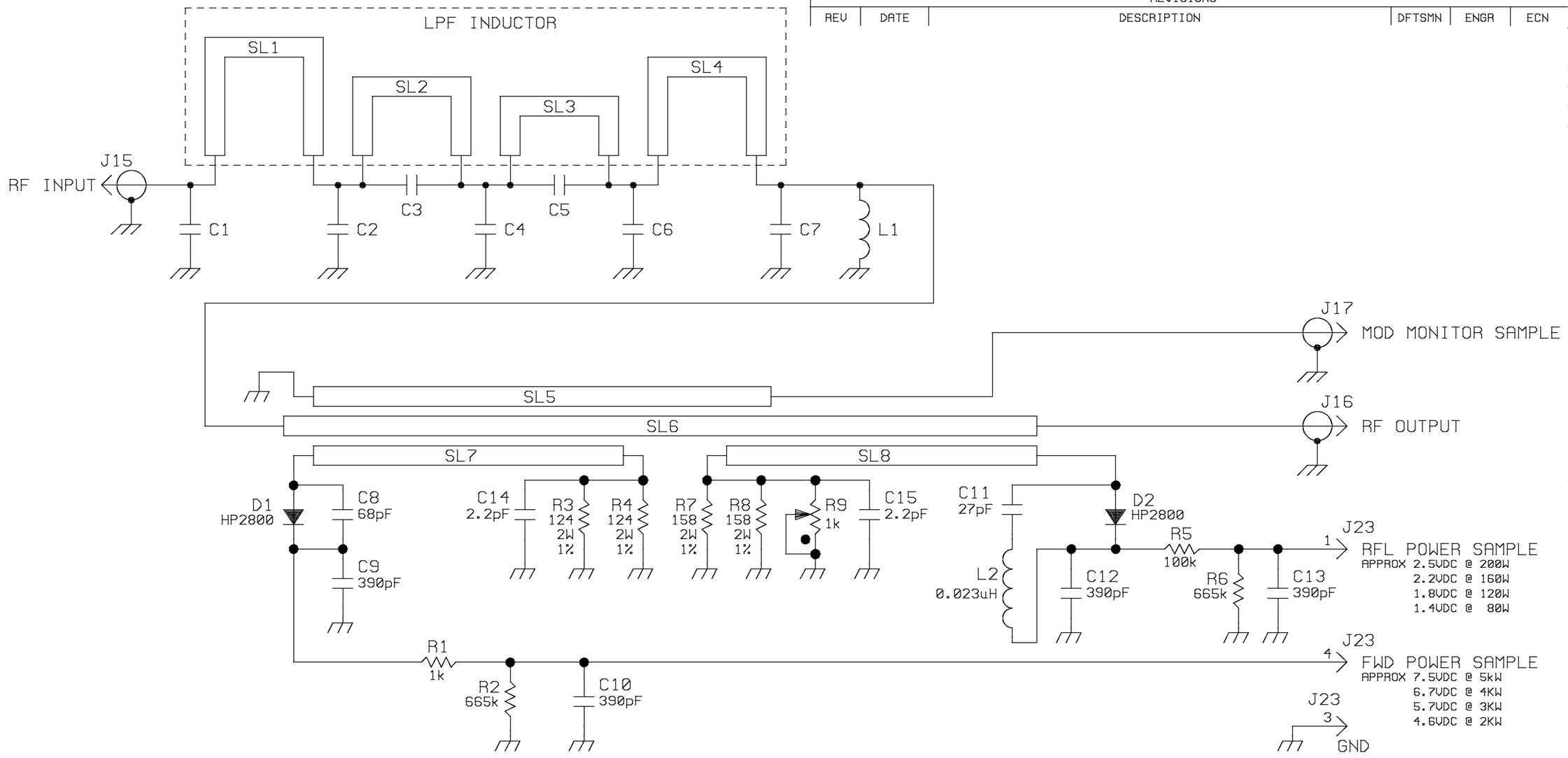

NOTES:

1. "SL" INDICATES ETCHED STRIPLINE ON PCB.
2. C1-C7 ARE ETCHED ON PCB.
3. ALL RESISTORS IN OHMS, 1/4W, 1%, UNLESS OTHERWISE SPECIFIED.
4. SEE PCB ASSEMBLY DRAWING AC919-0421/-001/-002.

TOLERANCE (DECIMAL) U.O.S.
.x ± .030 .xxx ± .005
.xx ± .015 ANGLES ± 1°

DWN. BY 2-24-94 M. HAYDEN
CHKD 9/27/94 C.L. LANGNER
ME
PROJ. ENGR. 9/27/94 J.R. CARPENTER
MFG.

MATERIAL
FINISH
SEE DWG RA592-0000
NEXT ASSY.

BROADCAST ELECTRONICS INC.
4100 N. 24TH ST., P.O.BOX 3606 QUINCY, IL. 62305 217/224-9600
TELEX 250142 CABLE BROADCAST FAX 217/224-9607

TITLE
SCHEMATIC
LOW PASS FILTER ASSEMBLY

TYPE	SIZE	DWG. NO.	REV
S	B	959-0414/-001/-002	C

MODEL FM-2C/3C/4C/5C/10S SCALE NONE SHEET 1 OF 1

REVISIONS					
REV	DATE	DESCRIPTION	DRAFTER	APPROVED	ECN

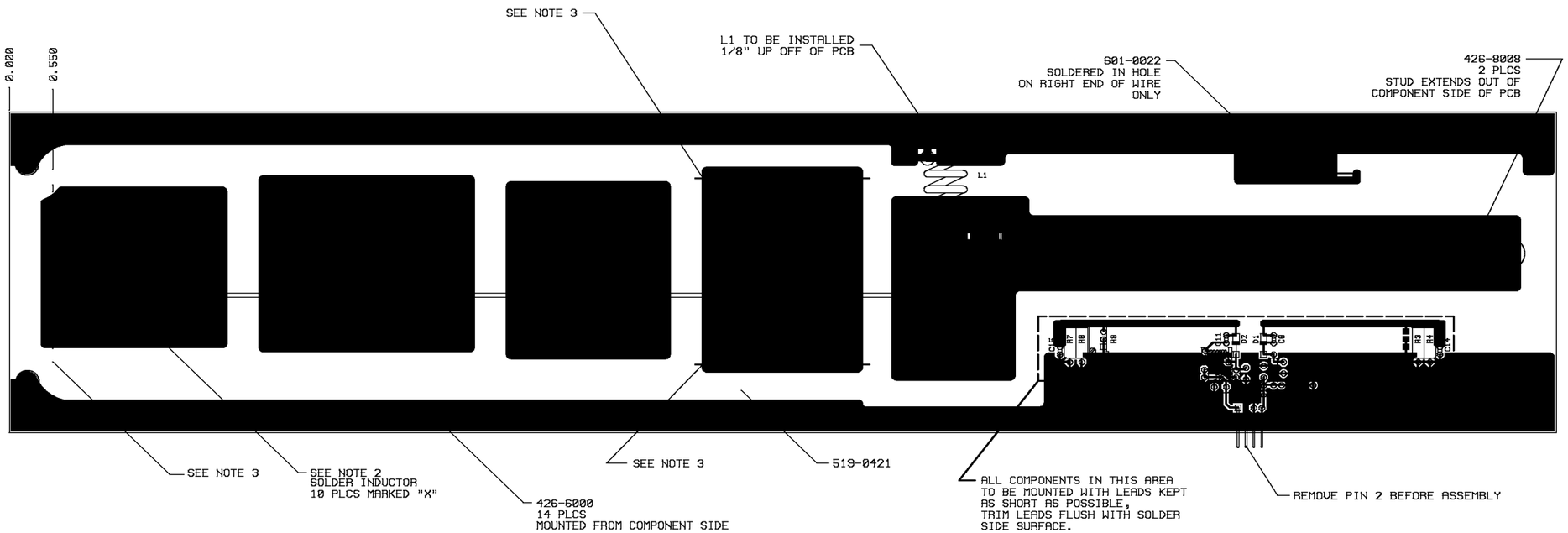

NOTES:

1. SEE SCHEMATIC SB959-0414.
2. USE 471-0976 ON 919-0421 (FM-2C/3C)
   USE 471-5035 ON 919-0421-001 (FM-4C/5C)
   USE 471-5035 ON 919-0421-002 (FM-10S).
3. FOR FM-2C/3C REMOVE COMPONENT SIDE COPPER OUTSIDE OF DASHED LINES (2 PLCS.).
4. FOR FM-10S REMOVE COMPONENT SIDE COPPER OUTSIDE OF DASHED LINE.

TOLERANCE (DECIMAL) U.O.S.
.X ± .030 .XXX ± .005
.XX ± .015 ANGLES ± 1°

DWN. BY 2-9-94 M. HAYDEN
DESIGNER(S) 9/27/94 C.L. LANGNER
PROJ. LEADER 9/27/94 J.R. CARPENTER
MFG.

MATERIAL: SEE BOM 919-0421/-001 /-002
FINISH: ~~SEE DWG AA592-0000~~
NEXT ASSY. 959-0414/-001/-002

BROADCAST ELECTRONICS INC.
4100 N.24TH ST. P.O.BOX 3606 QUINCY,IL. 62305 PH. 217/224-9600
TELEX 250142 CABLE BROADCAST FAX 217/224-9607

TITLE: PCB ASSEMBLY LOW PASS FILTER

TYPE	SIZE	DWG No.	REV
A	C	919-0421/-001/-002	E

MODEL FM-2C/3C/4C/5C/10S SCALE 1/1 SHEET 1 OF 1

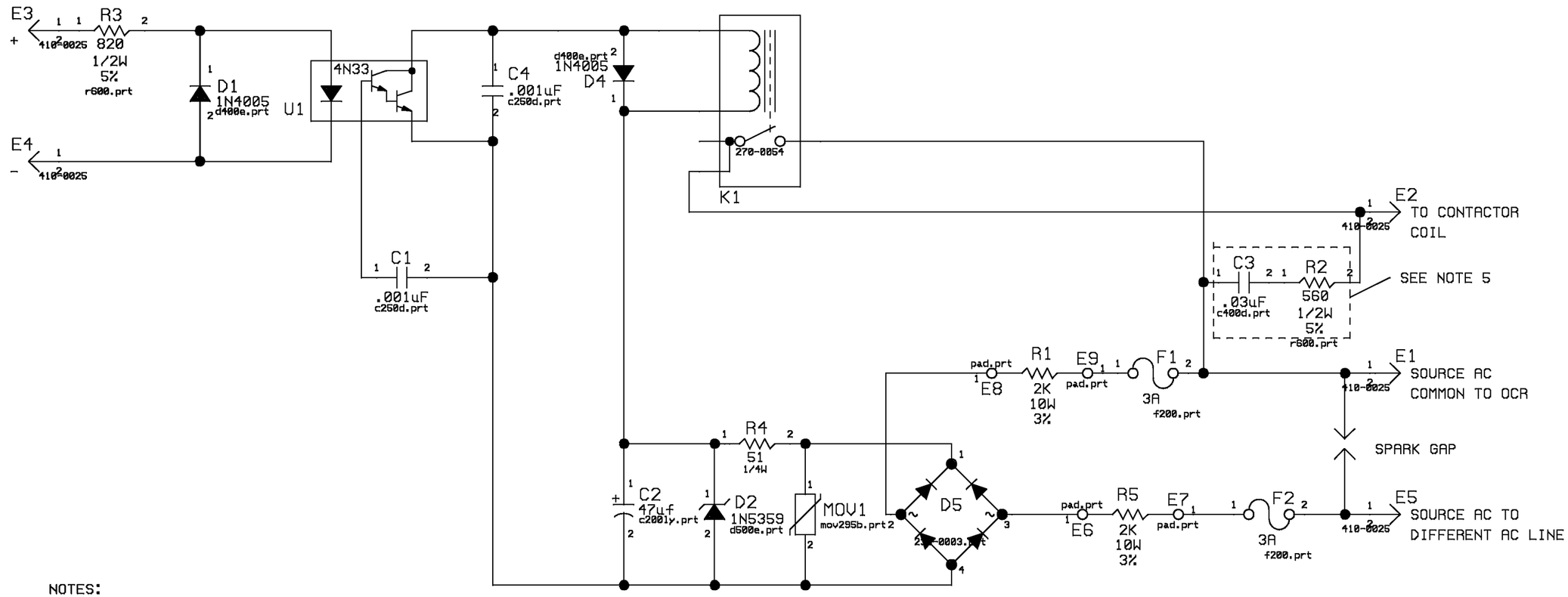

NOTES:

1. ALL RESISTORS IN OHMS; 1/4W, 1% UNLESS OTHERWISE SPECIFIED.
2. LAST COMPONENT USED:R5,F2,MOV1,C4, D4,U1,K1,E9
3. COMPONENTS NOT USED:D3
4. SEE ASSEMBLY:AB 919-0096
5. THESE COMPONENTS NOT USED ON 919-0096-001 C3,R2

TOLERANCE (DECIMAL) U.O.S.
.x ± .030 .xxx ± .005
.xx ± .015 ANGLES ± 1°

DWN. BY	JAH 11-26-91
CHKD	BG 11-92
ME	
PROJ. ENGR.	BG 11-92
MFG.	

MATERIAL
SEE B/M
919-0096
919-0096-001

FINISH

SEE DWG RA592-0000

NEXT ASSY.

BROADCAST ELECTRONICS INC.
4100 N. 24TH ST., P.O.BOX 3606 QUINCY, IL. 62305 217/224-9600
TELEX 250142 CABLE BROADCAST FAX 217/224-9607

TITLE
OPTICALLY COUPLED RELAY

TYPE	SIZE	DWG. NO.	REV
S	B	919-0096,-001	J

MODEL FM XMTR'S | SCALE NONE | SHEET 1 OF

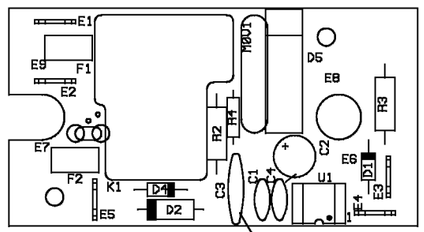

REMOVE R2 AND C3 FROM 919-0096
TO MAKE 919-0096-001

TOLERANCE (DECIMAL) U.O.S.
.X ± .030 .XXX ± .005
.XX ± .015 ANGLES + 1°

DWN. BY JAH 12-13-91
DESIGNER(S)
PROJ. LEADER J.TUCKER 7-14-86
MFG. J.STEINKAMP 7-14-86

MATERIAL SEE B/M 919-0096 919-0096-001
FINISH ~~SEE DWG RA592-0000~~
NEXT ASSY.

BROADCAST ELECTRONICS INC.
4100 N.24TH ST. P.O.BOX 3606 QUINCY,IL. 62305 PH. 217/224-9600
TELEX 250142 CABLE BROADCAST FAX 217/224-9607

TITLE PCB ASSEMBLY
OPTICALLY COUPLED RELAY BD.

TYPE	SIZE	DWG No.	REV
A	B	919-0096, 919-0096-001	N

MODEL TRANSMITTERS SCALE 1=1 SHEET 1 OF 2

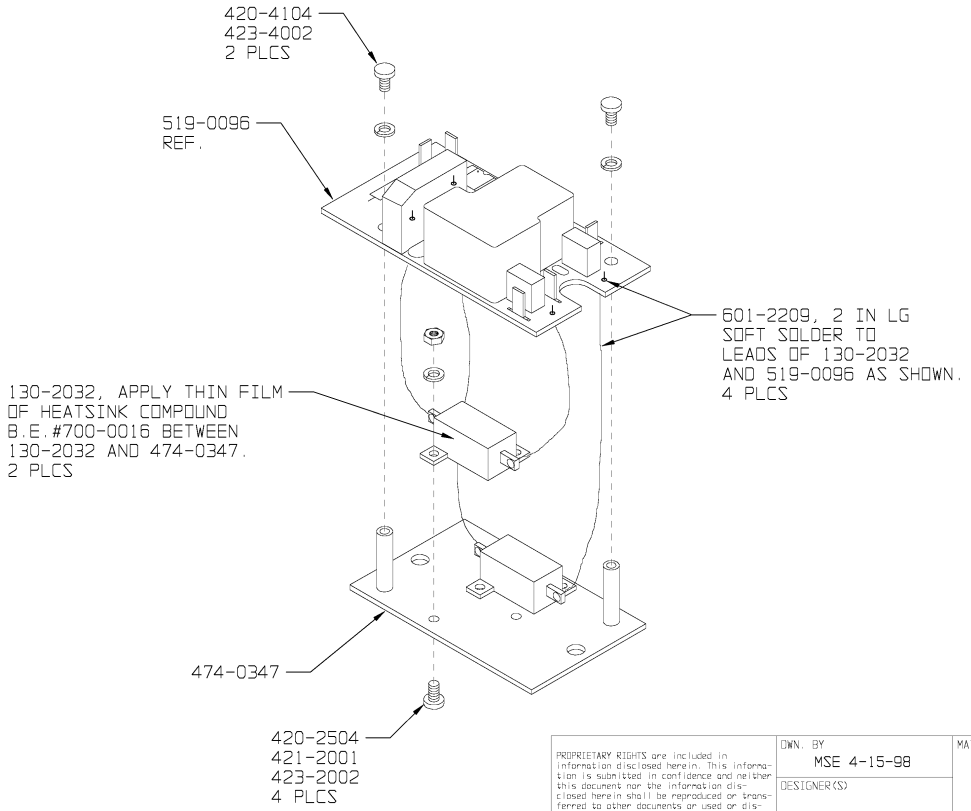

TOLERANCE (DECIMAL) U.O.S.
.x ± .030 .xxx ± .005
.xx ± .015 ANGLES ± 1°

DWN. BY MSE 4-15-98
DESIGNER(S)
PROJ. LEADER
MFG.

MATERIAL SEE BOM 919-0096, -001
FINISH SEE DWG RA592-0000
NEXT ASSY.

BROADCAST ELECTRONICS INC.
4100 N.24TH ST.,P.O.BOX 3606 QUINCY,IL 62305 217/224-9600
TELEX 250142 CABLE BROADCAST FAX 217/224-9607

TITLE ASSY, PCB OPTICALLY COUPLED RELAY (OCR)

TYPE	SIZE	DWG. NO.	REV
A	B	919-0096, -001	N

MODEL XMTRS SCALE 1/1 SHEET 2 OF 2

COPYRIGHT © 1998 BROADCAST ELECTRONICS, INC.